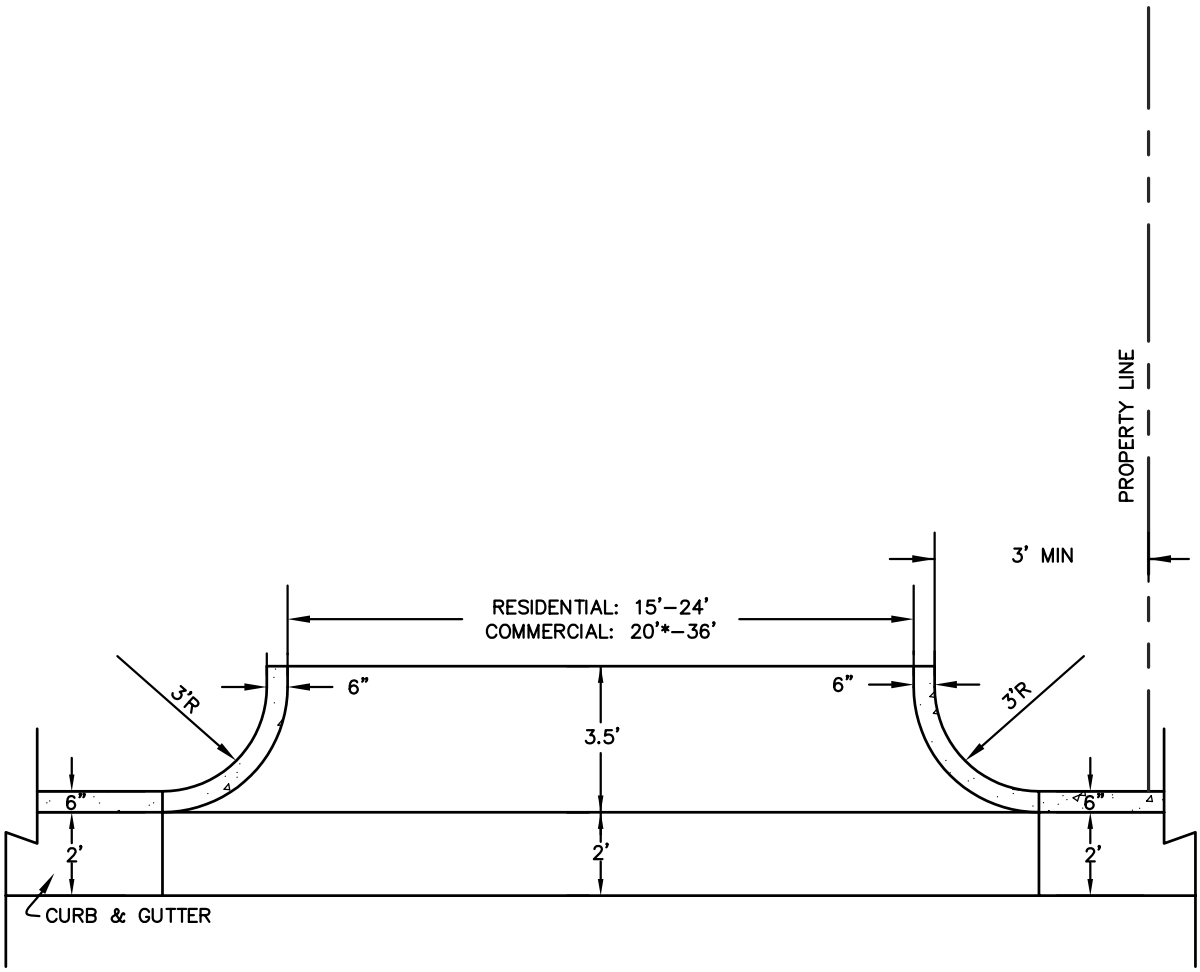

* COMMERCIAL: TWO–WAY MINIMUM 20'

NOTE:
ALL DRIVEWAY LOCATIONS, GRADES, AND CUTS SHALL BE AT A MINIMUM IN ACCORDANCE WITH THE LATEST EDITION OF THE "POLICY ON STREET AND DRIVEWAY ACCESS TO NORTH CAROLINA HIGHWAYS," PUBLISHED BY THE NORTH CAROLINA DEPARTMENT OF TRANSPORTATION TRAFFIC ENGINEERING BRANCH.

NOT TO SCALE

CITY OF HICKORY

REVISIONS			TYPICAL DRIVEWAY CUT	DATE: 2–1–07
NO.	DATE	DESCRIPTION		SHEET 1 OF 1
				STD. NO. 402

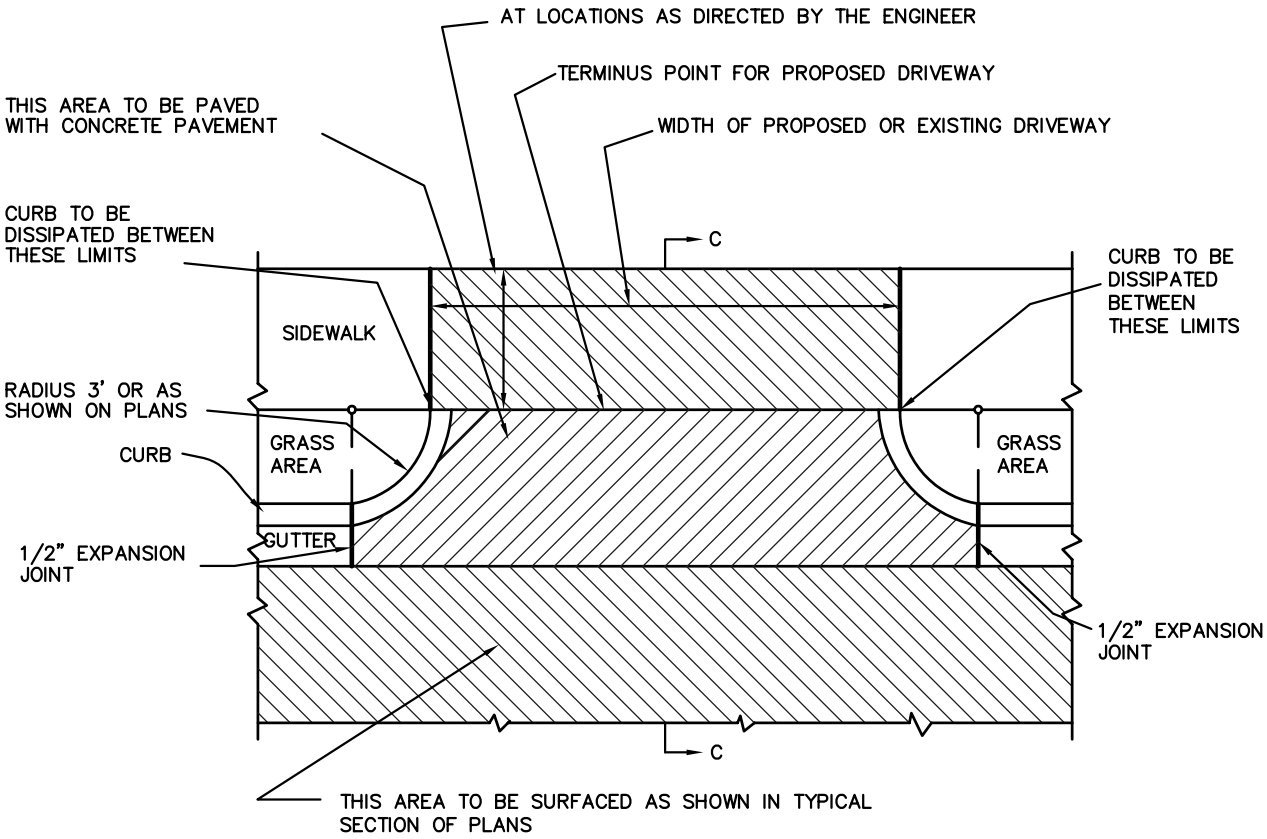

PART PLAN PAVED DRIVEWAY TURNOUT

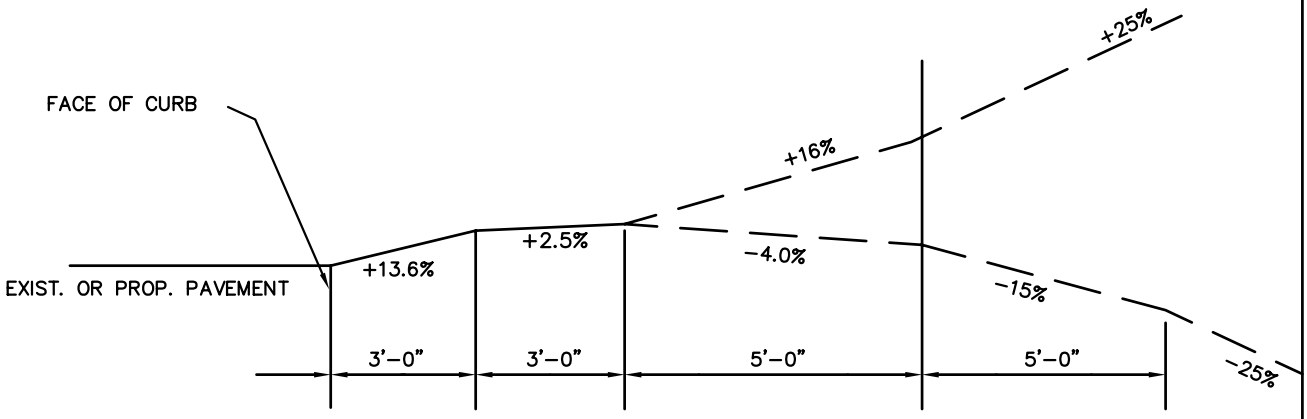

DRIVEWAY TURNOUT GRADES

NOT TO SCALE

CITY OF HICKORY

REVISIONS		
NO.	DATE	DESCRIPTION

DRIVEWAY TURNOUT RADIUS TYPE

DATE: 2-1-07

SHEET 1 OF 2

STD. NO. 404.1

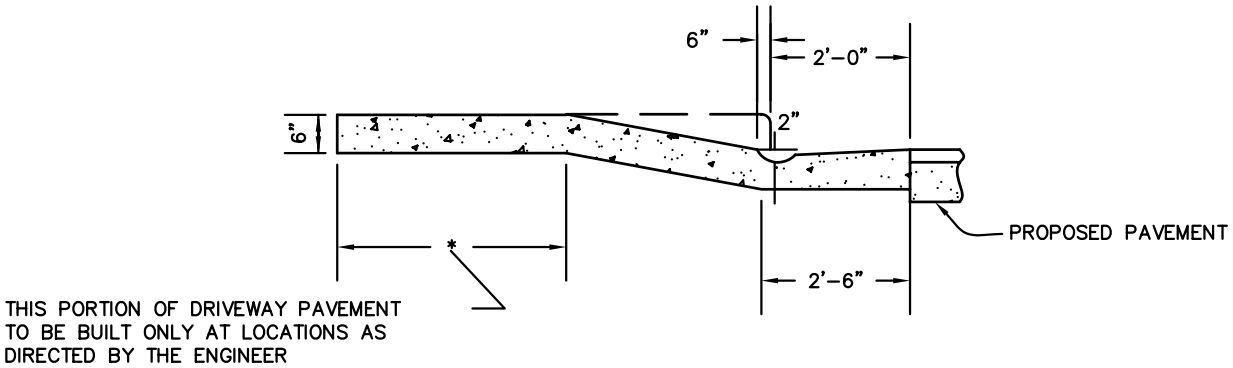

SECTION-CC

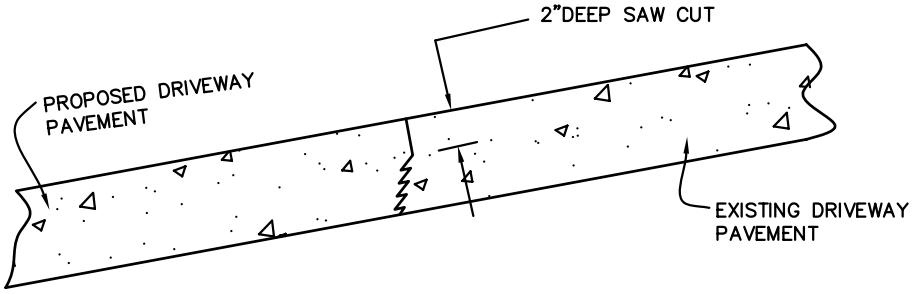

METHOD OF TIE IN

WHEN EXISTING DRIVEWAY PAVEMENT IS CONCRETE, A SAW CUT 2" DEEP SHALL BE REQUIRED AT THE POINT OF TIE IN WITH EXISTING DRIVEWAY GRADE. SAW JOINT TO BE PERPENDICULAR TO EDGE OF EXISTING DRIVEWAY PAVEMENT.

NOT TO SCALE

CITY OF HICKORY

REVISIONS				
NO.	DATE	DESCRIPTION	DRIVEWAY TURNOUT RADIUS TYPE	DATE: 2-1-07
				SHEET 2 OF 2
				STD. NO. 404.2

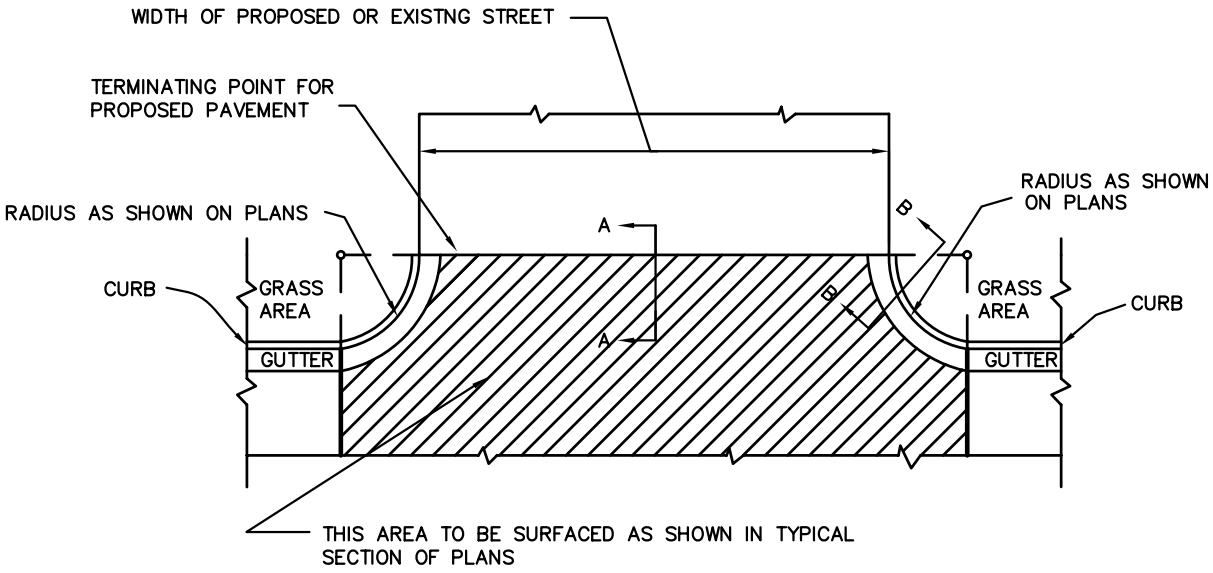

PART PLAN PAVED DRIVEWAY TURNOUT

TO BE USED ON PROPOSED AND EXISTING STREET INTERSECTIONS OR MAJOR TYPE COMMERCIAL EXTRANCES

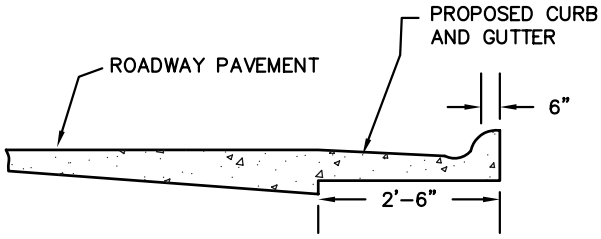

SECTION–BB

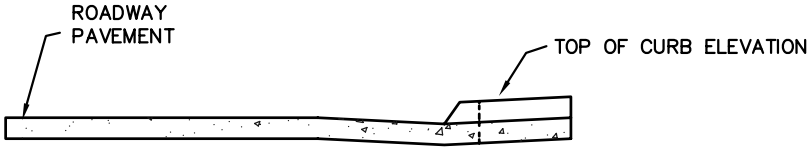

SECTION–AA

NOT TO SCALE

CITY OF HICKORY

REVISIONS			DESIGN STANDARDS FOR STREET TURNOUTS	DATE: 2–1–07
NO.	DATE	DESCRIPTION		SHEET 1 OF 1
				STD. NO. 405

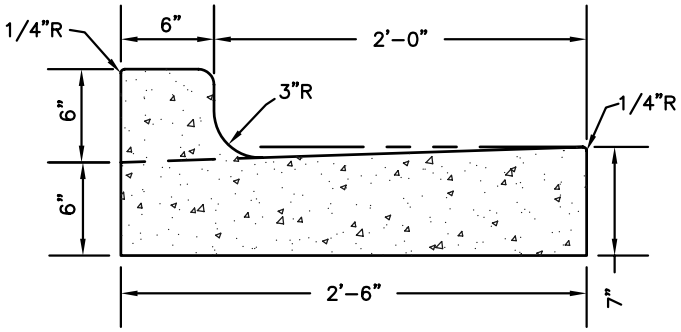

SECTION A-A

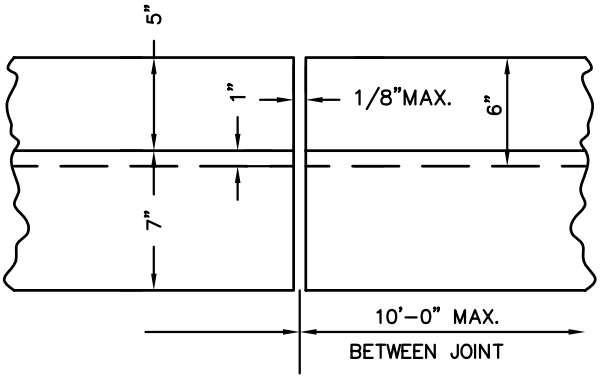

NOTES:

1. CONCRETE SHALL BE CLASS B, 3000 PSI COMPRESSIVE STRENGTH IN 28 DAYS.
2. CONTRACTION JOINTS SHALL BE SPACED AT 10 FOOT INTERVALS. A 15' SPACING MAY BE USED WHEN A MACHINE IS USED. JOINT SPACING MAY BE ALTERED BY THE ENGINEER TO PREVENT UNCONTROLLED CRACKING.
3. CONTRACTION JOINTS MAY BE INSTALLED BY THE USE OF TEMPLATES OR FORMED BY OTHER APPROVED METHODS.
   WHERE SUCH JOINTS ARE NOT FORMED BY TEMPLATES, A MINIMUM DEPTH OF 1 1/2" SHALL BE OBTAINED.
4. ALL EXPANSION JOINTS SHALL BE SPACED AT 90 FOOT INTERVALS, AND ADJACENT TO ALL RIGID OBJECTS.
5. CURB SHALL BE DEPRESSED AT INTERSECTIONS TO PROVIDE FOR FUTURE ACCESSIBLE RAMPS.
6. TOP OF 6" SUBGRADE BENEATH THE CURB AND GUTTER SHALL BE COMPACTED TO 100% STANDARD PROCTOR DENSITY.
7. ALL GUTTERS SHALL BE SLOPED AS NECESSARY TO PREVENT PONDING.

NOT TO SCALE

CITY OF HICKORY

REVISIONS				
NO.	DATE	DESCRIPTION	STANDARD 30" CURB AND GUTTER	DATE: 2-1-07
				SHEET 1 OF 1
				STD. NO. 406

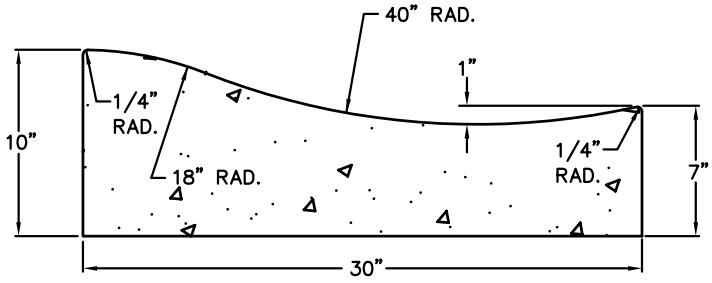

VALLEY GUTTER CROSS-SECTION

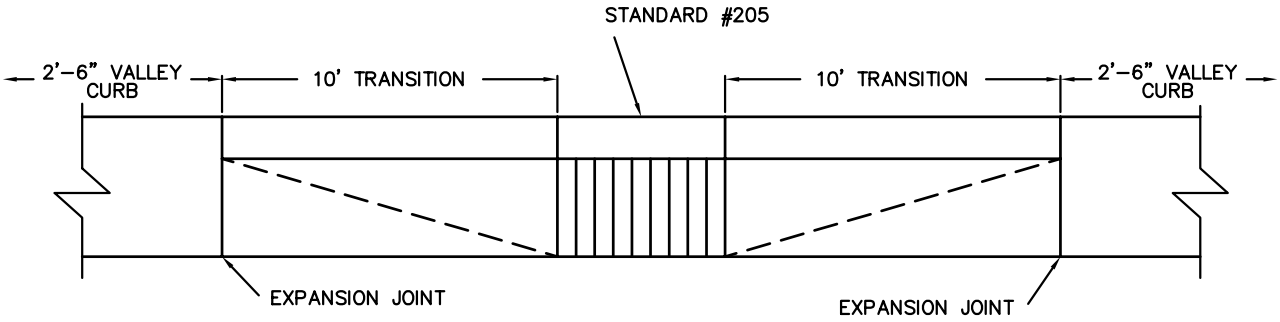

CATCH BASIN TRANSITION

PLAN VIEW

NOTES:

1. CONCRETE SHALL BE CLASS B, 3000 PSI COMPRESSIVE STRENGTH IN 28 DAYS.
2. CONTRACTION JOINTS SHALL BE SPACED AT 10 FOOT INTERVALS. A 15' SPACING MAY BE USED WHEN A MACHINE IS USED. JOINT SPACING MAY BE ALTERED BY THE ENGINEER TO PREVENT UNCONTROLLED CRACKING.
3. CONTRACTION JOINTS MAY BE INSTALLED BY THE USE OF TEMPLATES OR FORMED BY OTHER APPROVED METHODS.
   WHERE SUCH JOINTS ARE NOT FORMED BY TEMPLATES, A MINIMUM DEPTH OF 1 1/2" SHALL BE OBTAINED.
4. ALL EXPANSION JOINTS SHALL BE SPACED AT 90 FOOT INTERVALS, AND ADJACENT TO ALL RIGID OBJECTS.
5. CURB SHALL BE DEPRESSED AT INTERSECTIONS TO PROVIDE FOR FUTURE ACCESSIBLE RAMPS.
6. TOP OF 6" SUBGRADE BENEATH THE CURB AND GUTTER SHALL BE COMPACTED TO 100% STANDARD PROCTOR DENSITY.
7. ALL GUTTERS SHALL BE SLOPED AS NECESSARY TO PREVENT PONDING.

NOT TO SCALE

Hickory	CITY OF HICKORY			
	REVISIONS		30" VALLEY GUTTER	DATE: 2-1-07
	NO.	DATE	DESCRIPTION	SHEET 1 OF 1
				STD. NO. 407

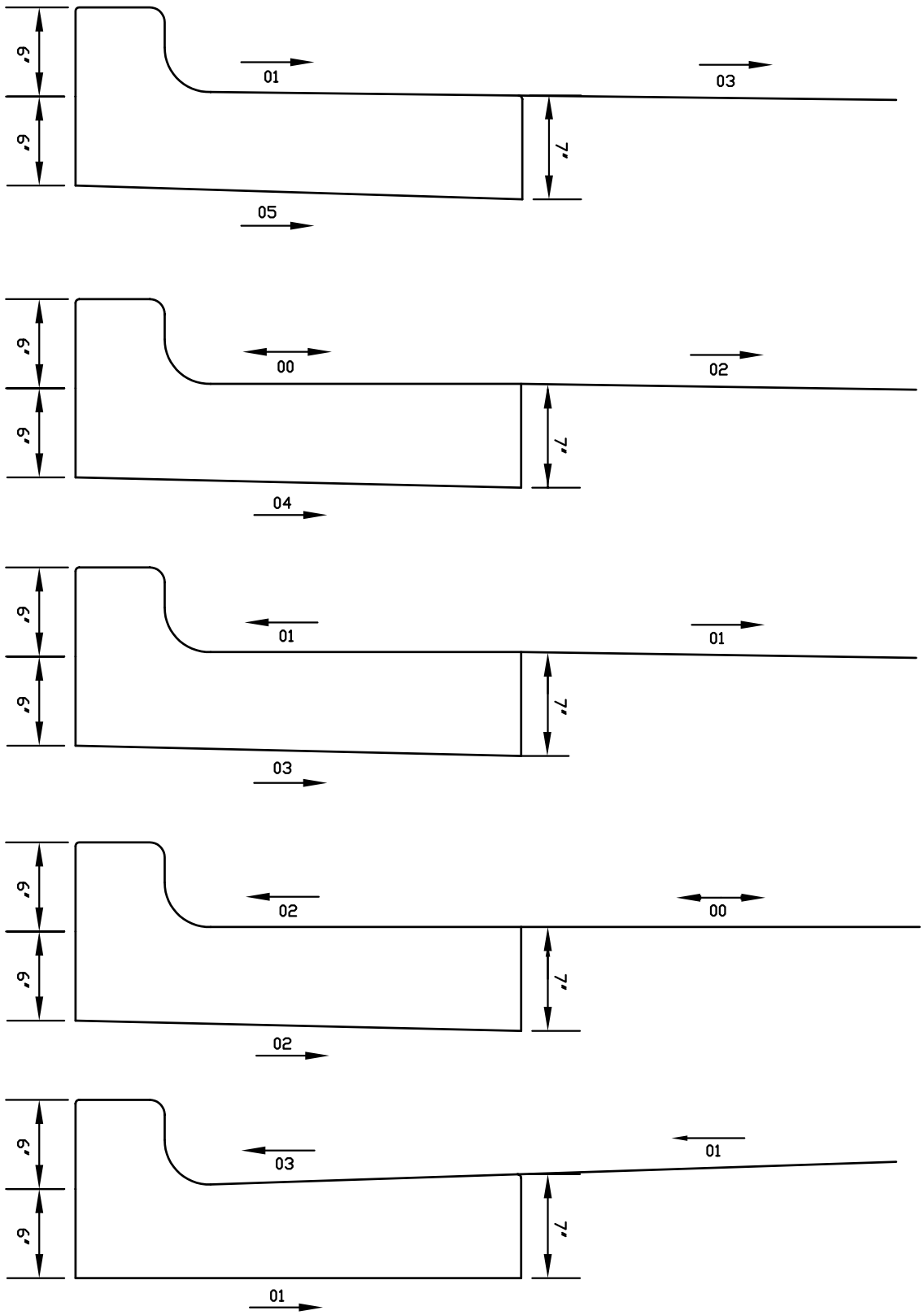

NOT TO SCALE

CITY OF HICKORY

REVISIONS		
NO.	DATE	DESCRIPTION

CURB AND GUTTER FOR VARIABLE SUPER ELEVATIONS RATES

DATE: 2-1-07

SHEET 1 OF 2

STD. NO. 408.1

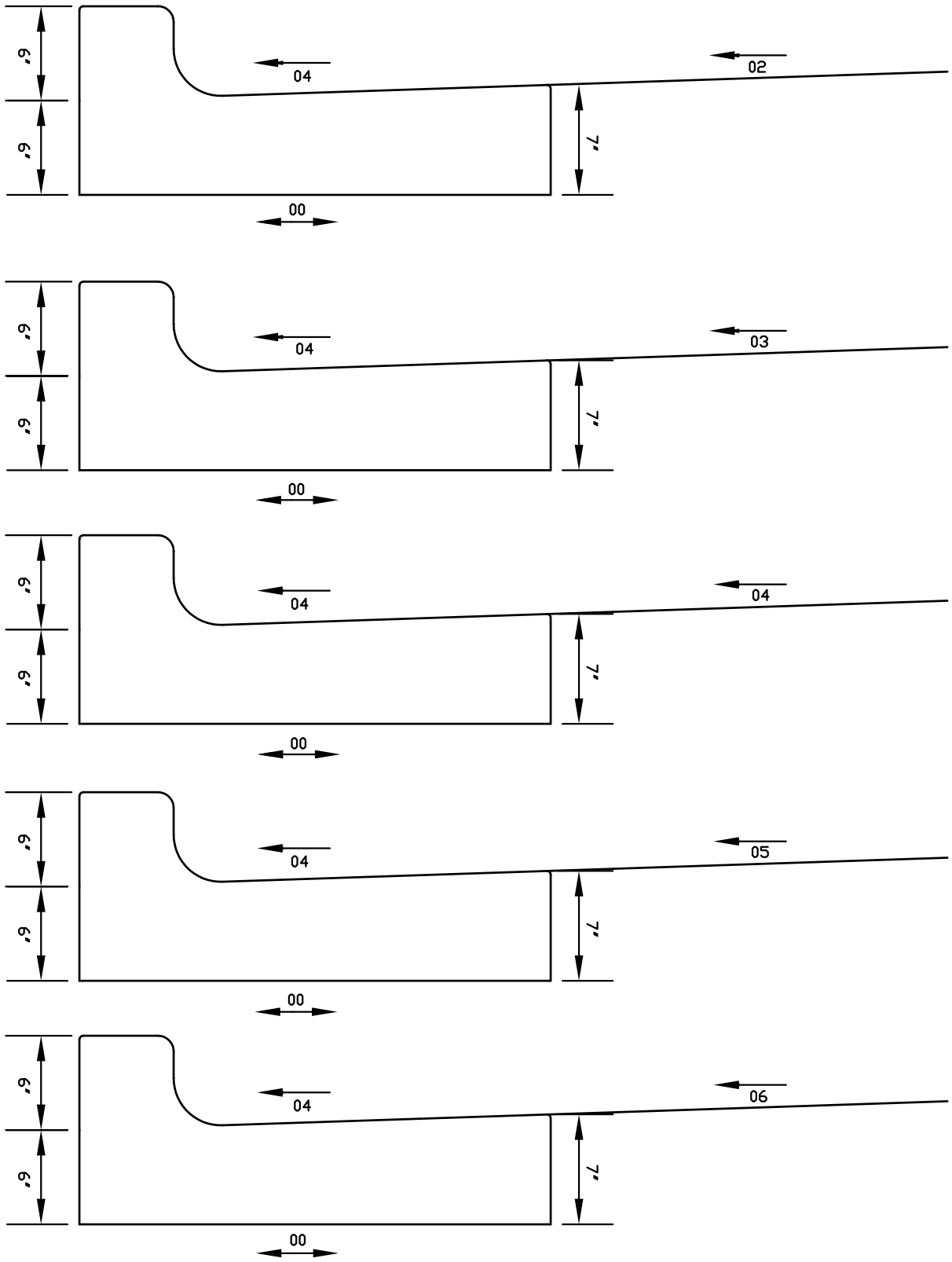

NOT TO SCALE

CITY OF HICKORY

REVISIONS		
NO.	DATE	DESCRIPTION

CURB AND GUTTER FOR VARIABLE SUPER ELEVATIONS RATES

DATE: 2-1-07

SHEET 2 OF 2

STD. NO. 408.2

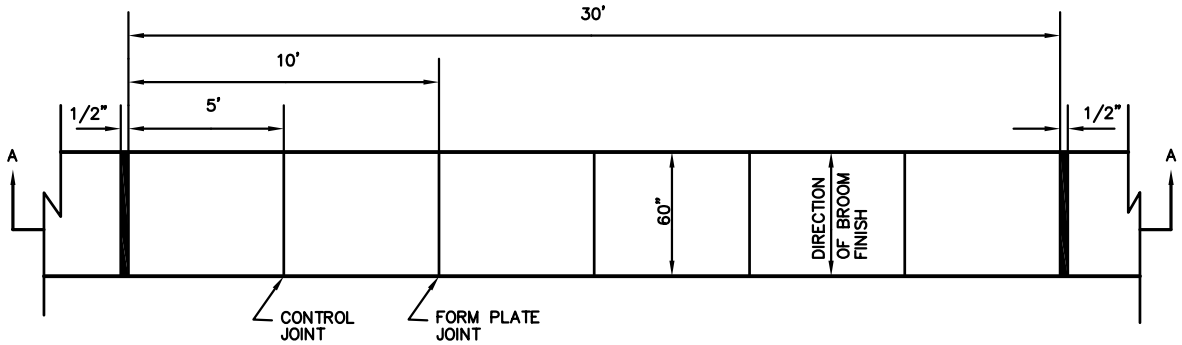

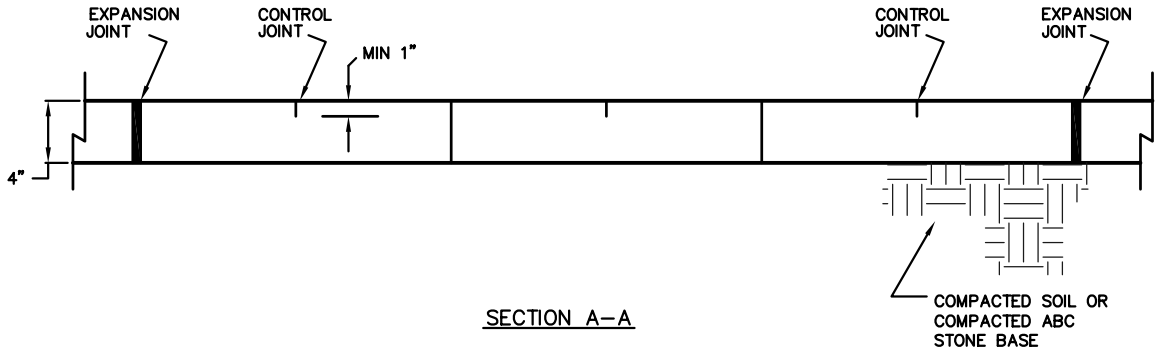

SECTION A–A

NOTE:
1. CONCRETE SHALL HAVE A COMPRESSIVE STRENGTH OF 3000 PSI AT 28 DAYS
2. SURFACE SHALL BE ROUGH NON–SKID TYPE
3. ALL SIDEWALKS SHALL HAVE CROSS–SLOPE OF 1/4" PER FOOT TO DRAIN TOWARD STREET.

NOT TO SCALE

CITY OF HICKORY				
REVISIONS			SIDEWALKS	DATE: 2–1–07
NO.	DATE	DESCRIPTION		SHEET 1 OF 1
				STD. NO. 409

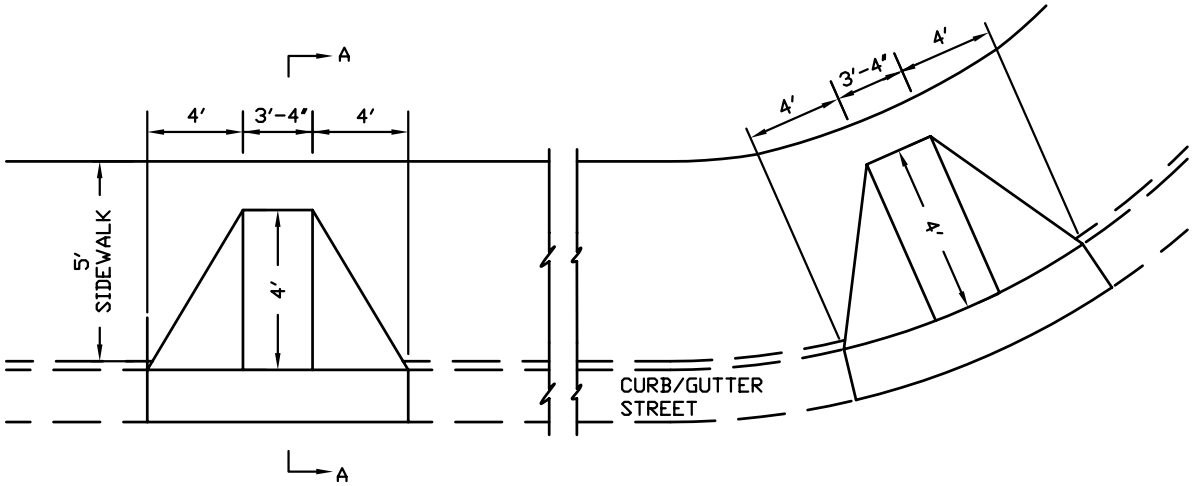

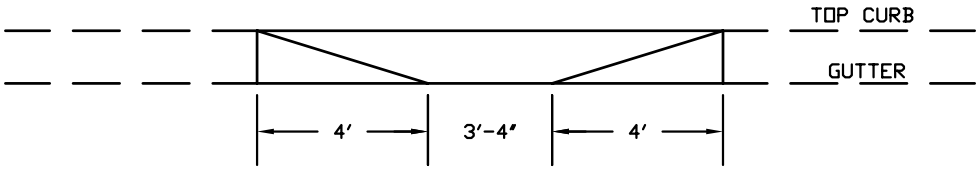

FRONT ELEVATION

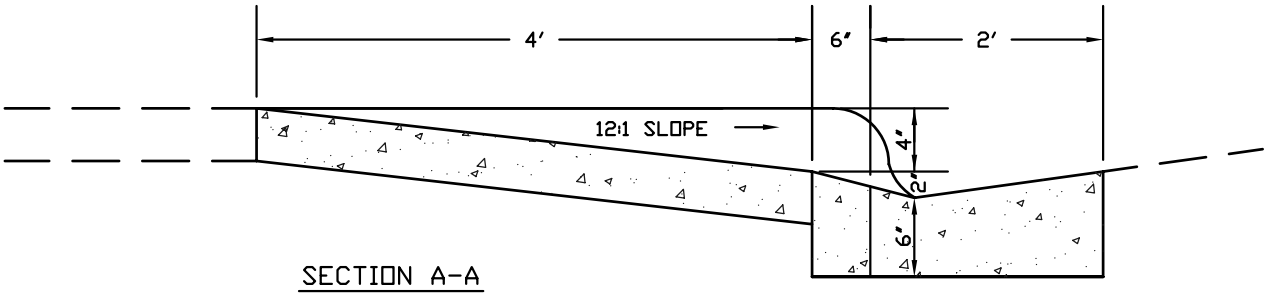

SECTION A-A

NOT TO SCALE

CITY OF HICKORY				
REVISIONS			STANDARD WHEELCHAIR RAMP	DATE: 2-1-07
NO.	DATE	DESCRIPTION		SHEET 1 OF 7
				STD. NO. 410.1

GENERAL NOTES FOR WHEEL CHAIR RAMPS

I. LOCATION OF WHEELCHAIR RAMPS:

1. IN ACCORDANCE WITH THE RATIFIED HOUSE BILL 1296, ALL STREET CURBS IN NORTH CAROLINA BEING CONSTRUCTED OR RECONSTRUCTED FOR MAINTENANCE PROCEDURES, TRAFFIC OPERATIONS, REPAIRS CORRECTION OF UTILITIES OR ALTERED FOR ANY REASON AFTER SEPTEMBER 1, 1973 SHALL PROVIDE WHEELCHAIR RAMPS FOR THE PHYSICALLY HANDICAPPED AT ALL INTERSECTIONS WHERE BOTH CURB AND GUTTER AND SIDEWALKS ARE PROVIDED AND AT OTHER MAJOR POINTS OF PEDESTRIAN FLOW.

2. WHEELCHAIR RAMPS SHOULD BE LOCATED AS INDICATED IN DETAIL DRAWINGS, HOWEVER EXISTING LIGHT POLES, FIRE HYDRANTS, DROP INLETS, ETC. MAY AFFECT PLACEMENT.

II. CONSTRUCTION NOTES:

1. NO SLOPE SHALL EXCEED 1"=1' (12:1) ON THE RAMPS OR SIDEWALK.
2. IN NO CASE SHALL THE WIDTH OF WHEELCHAIR RAMPS BE LESS THAN 40" (3'-4"). WIDTHS MAY EXCEED 40" IF NECESSARY.
3. USE CLASS "B" CONCRETE WITH THE SURFACE HAVING A ROUGH, NON-SKID TYPE FINISH.
4. A 1/2" EXPANSION JOINT WILL BE REQUIRED WHERE THE CONCRETE WHEELCHAIR RAMP JOINS ANY RIGID PAYMENT OR STRUCTURE.
5. CONSTRUCTION METHODS SHALL CONFORM WITH THOSE OF THE GOVERNING BODY WHICH HAS JURISDICTION OF THE PARTICULAR STREET.

III. ADDITIONAL NOTES:

NOTE 1. THE INSIDE PEDESTRIAN CROSSWALK LINES SHALL BE ESTABLISHED BY BISECTING THE INTERSECTION RADI WHERE MARKED.

NOTE 2. THE WHEELCHAIR RAMP SHALL BE LOCATED SO THAT THE BEGINNING OF THE WHEELCHAIR RAMP WILL BE TWO FEET FROM THE INSIDE PEDESTRIAN CROSSWALK LINE.

NOTE 3. THE WIDTH OF THE PEDESTRIAN CROSSWALK SHALL BE 10 FEET UNLESS A GREATER WIDTH IS REQUIRED TO ACCOMMODATE THE PEDESTRIAN TRAFFIC.

NOTE 4. TYPE "B" WHEELCHAIR RAMPS SHALL BE USED ONLY WHEN THE GRASSED DISTANCE BETWEEN THE CURB AND SIDEWALK EXCEEDS 5'-4".

NOTE 5. STOP BARS SHALL BE USED WHERE IT IS IMPORTANT TO INDICATED THE POINT BEHIND WHICH VEHICLES ARE REQUIRED TO STOP IN COMPLIANCE WITH A TRAFFIC SIGNAL, STOP SIGN, OR OTHER LEGAL REQUIREMENTS.

NOTE 6. PARKING SHALL BE ELIMINATED A MINIMUM OF 20 FEET BACK OF PEDESTRIAN CROSSWALK.

NOT TO SCALE

Hickory	CITY OF HICKORY			
	REVISIONS		STANDARD WHEELCHAIR RAMP	DATE: 2-1-07
	NO.	DATE	DESCRIPTION	SHEET 2 OF 7
				STD. NO. 410.2

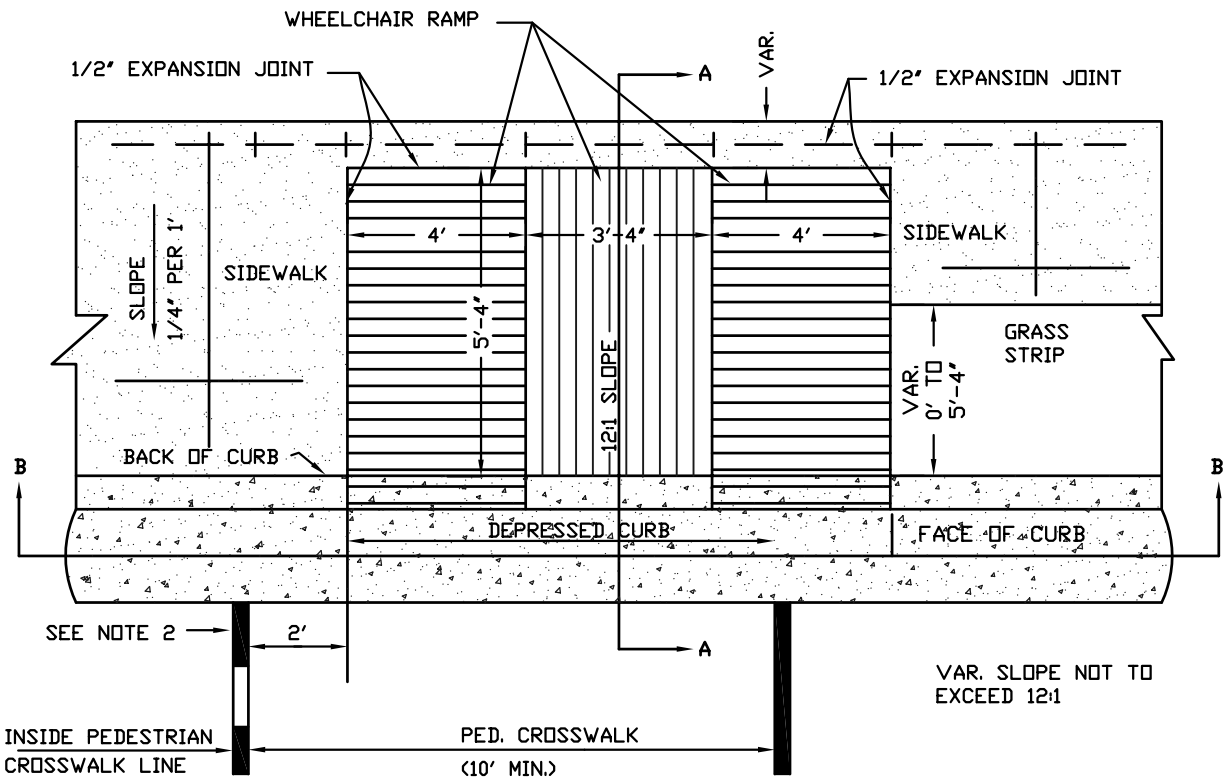

TYPE "A" WHEELCHAIR RAMP

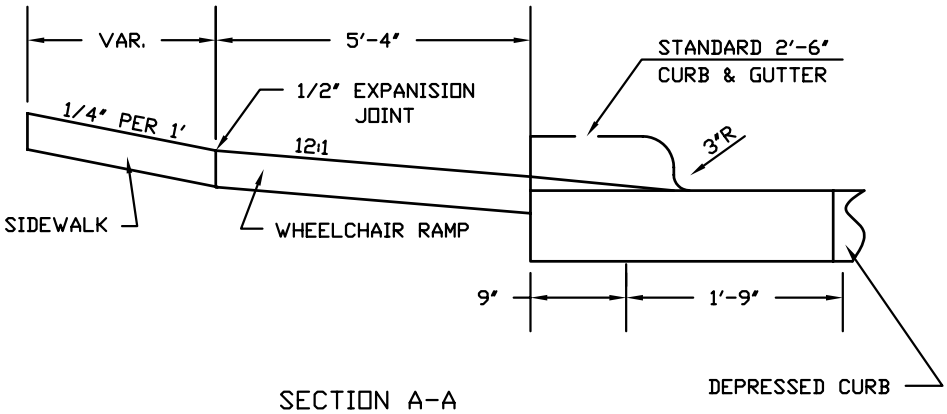

SECTION A-A

*(SEE SHEET 2 FOR NUMBERED NOTES)

NOT TO SCALE

CITY OF HICKORY

REVISIONS			WHEELCHAIR RAMPS DEPRESSED CURBS	DATE: 2-1-07
NO.	DATE	DESCRIPTION		SHEET 3 OF 7
				STD. NO. 410.3

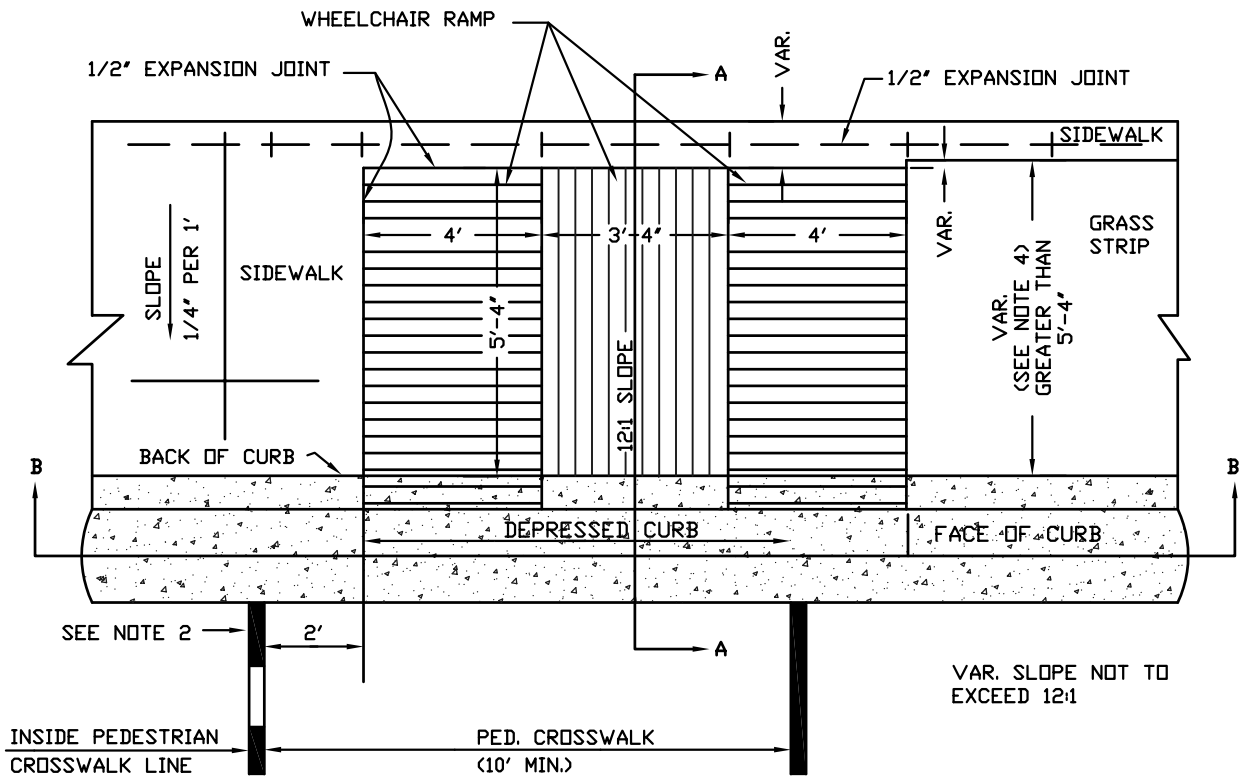

TYPE "B" WHEELCHAIR RAMP

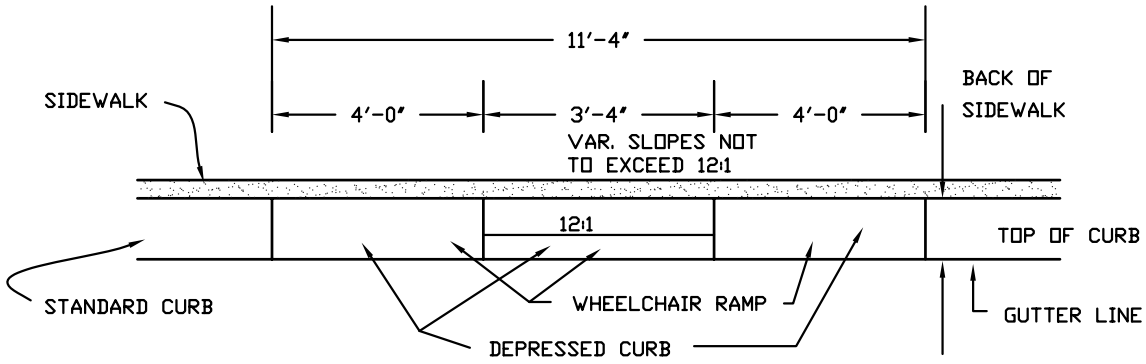

SECTION B-B

*(SEE SHEET 2 FOR NUMBERED NOTES)

NOT TO SCALE

CITY OF HICKORY

REVISIONS			WHEELCHAIR RAMPS DEPRESSED CURBS	DATE: 2-1-07
NO.	DATE	DESCRIPTION		SHEET 4 OF 7
				STD. NO. 410.4

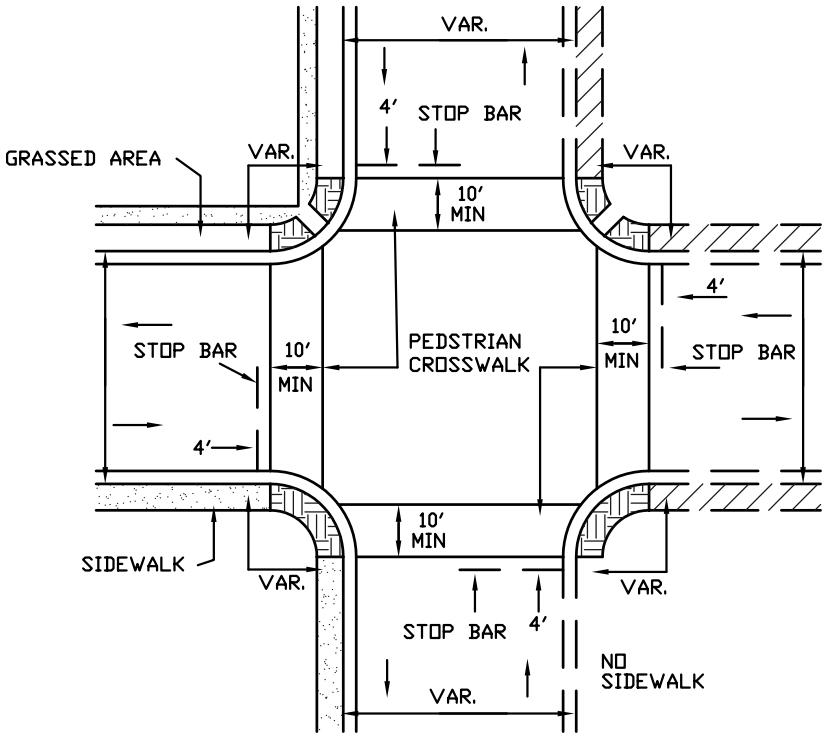

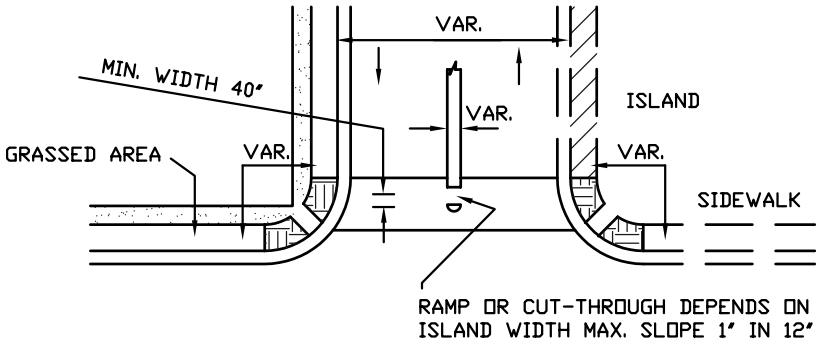

NOT TO SCALE

CITY OF HICKORY

REVISIONS			WHEELCHAIR RAMPS DEPRESSED CURBS	DATE: 2-1-07
NO.	DATE	DESCRIPTION		SHEET 5 OF 7
				STD. NO. 410.5

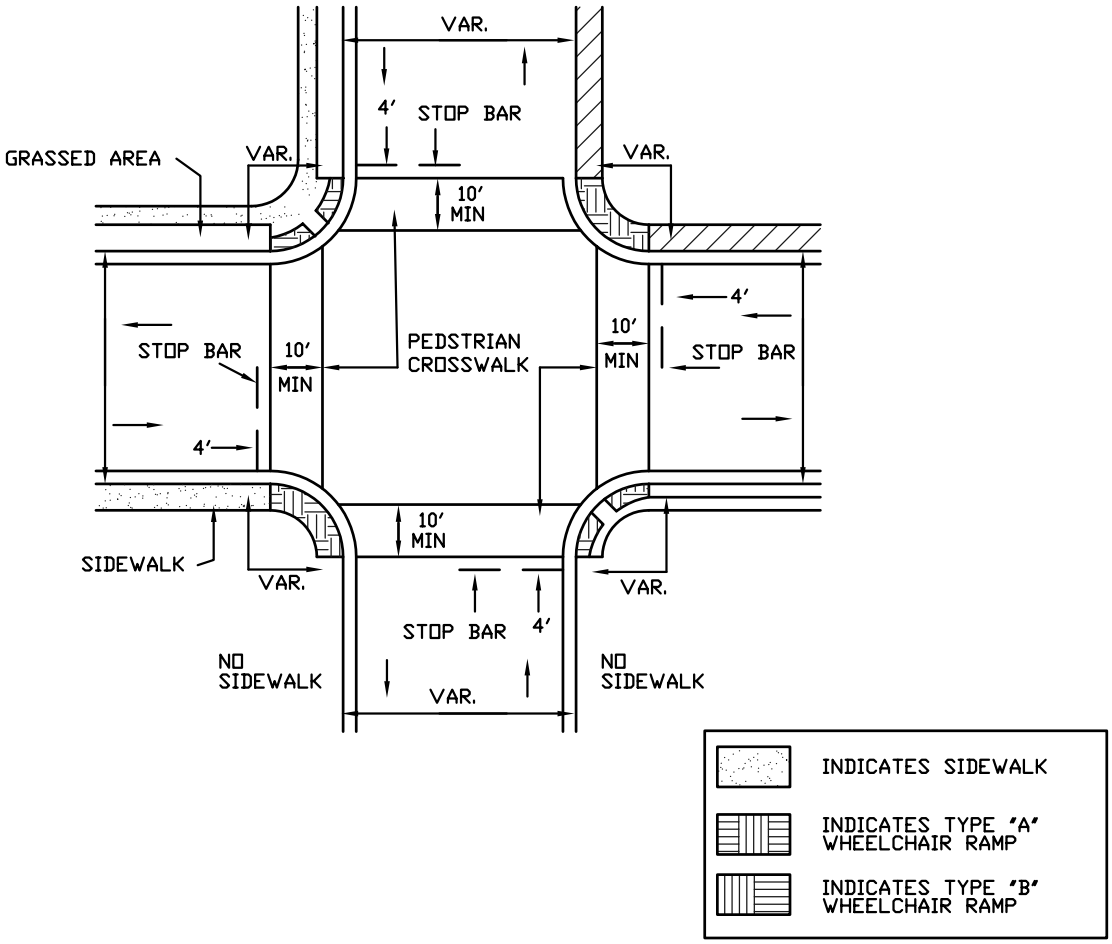

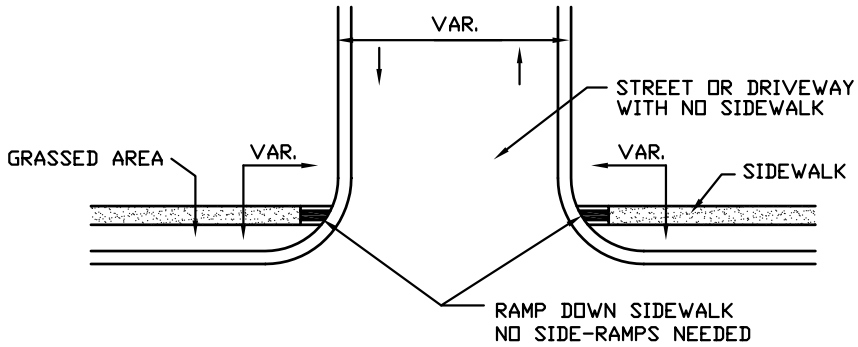

*(SEE SHEET 2 FOR NOTES)

NOT TO SCALE

CITY OF HICKORY

REVISIONS			WHEELCHAIR RAMPS DEPRESSED CURBS	DATE: 2-1-07
NO.	DATE	DESCRIPTION		SHEET 6 OF 7
				STD. NO. 410.6

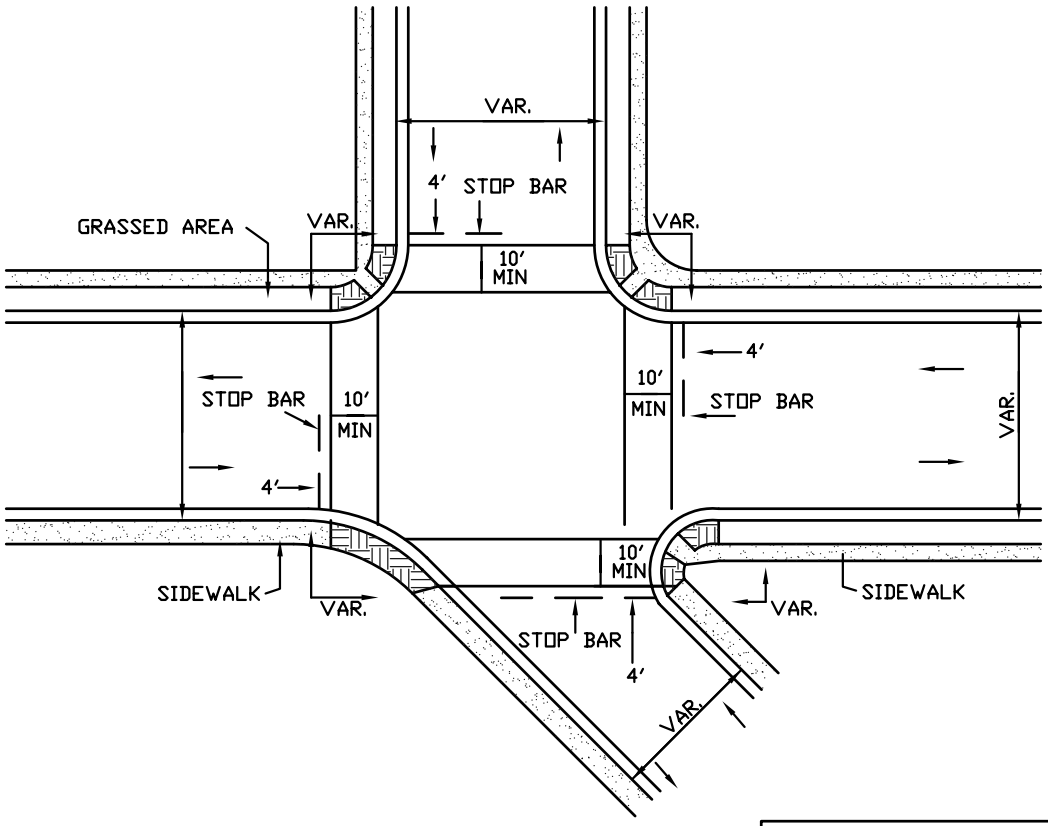

INDICATES SIDEWALK

INDICATES TYPE "A" WHEELCHAIR RAMP

INDICATES TYPE "B" WHEELCHAIR RAMP

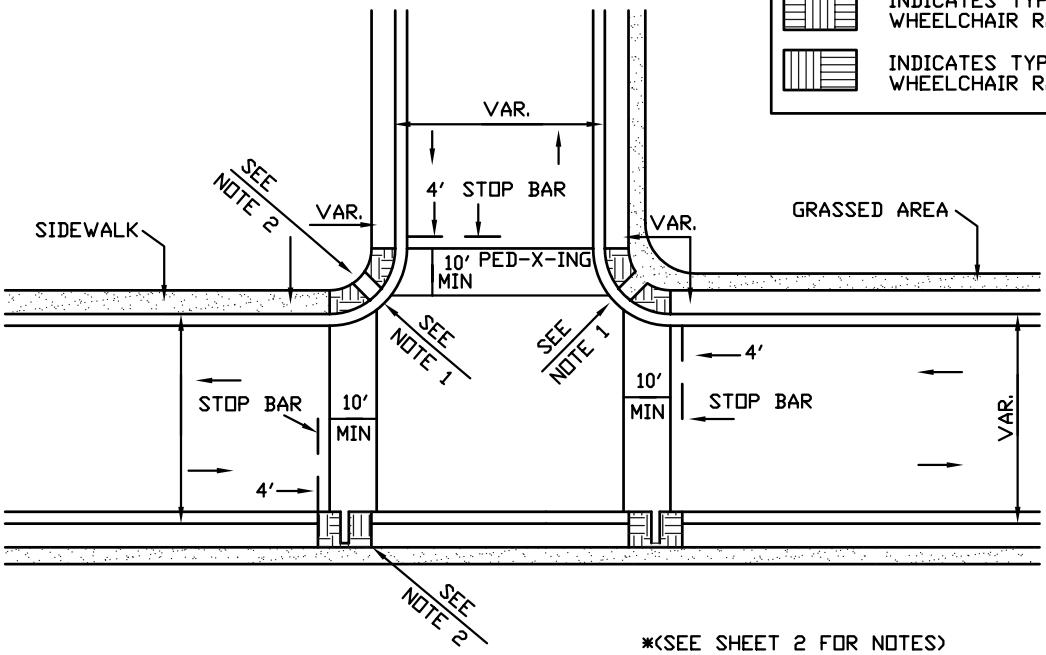

*(SEE SHEET 2 FOR NOTES)

NOT TO SCALE

CITY OF HICKORY

REVISIONS		
NO.	DATE	DESCRIPTION

WHEELCHAIR RAMPS
DEPRESSED CURBS

DATE: 2-1-07

SHEET 7 OF 7

STD. NO. 410.7

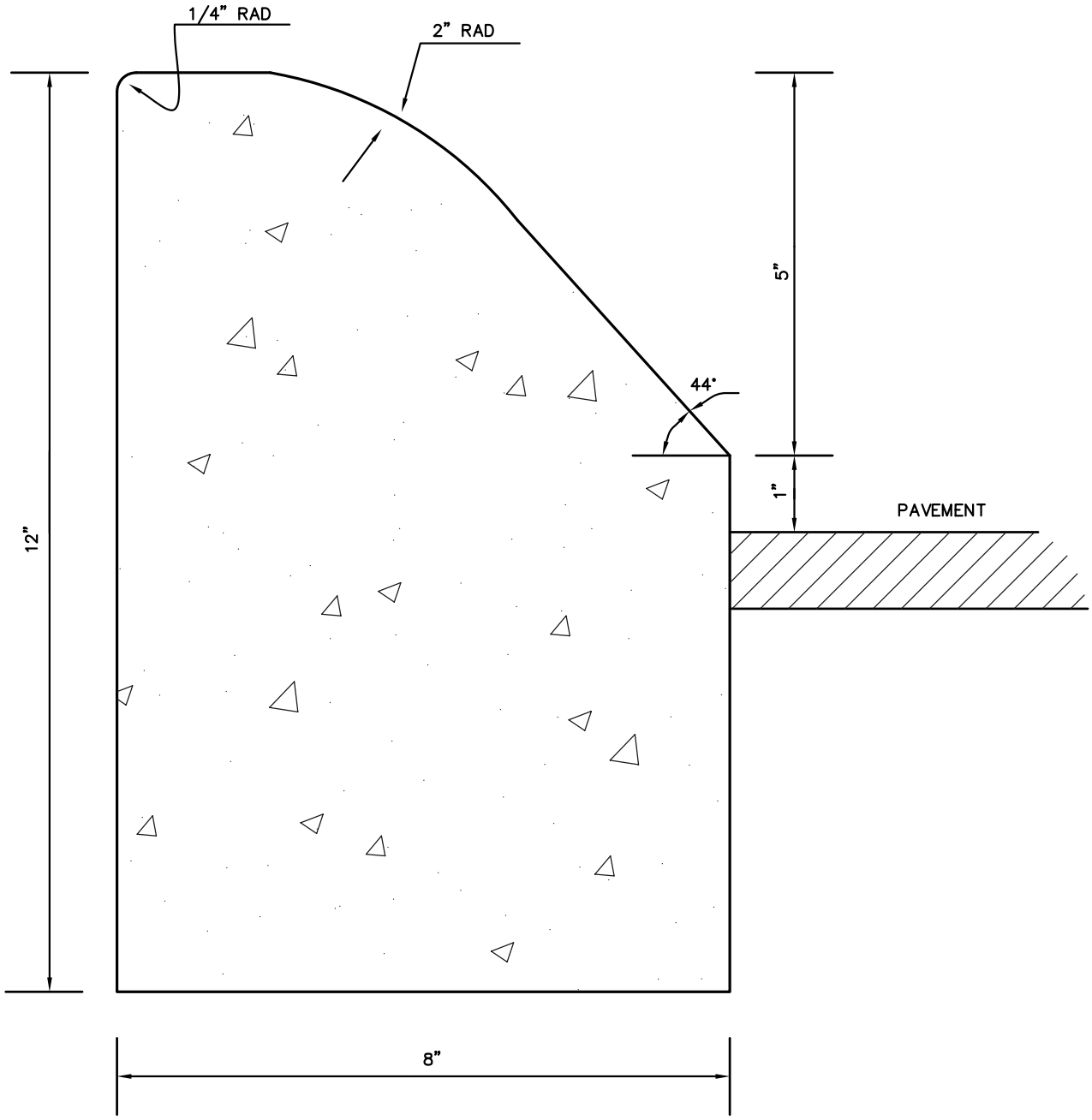

NOTE– *EXPANSION JOINT EVERY 40' & CONST. JOINT EVERY 10'

NOT TO SCALE

CITY OF HICKORY				
REVISIONS			8" X 12" MEDIAN CURB	DATE: 2–1–07
NO.	DATE	DESCRIPTION		SHEET 1 OF 1
				STD. NO. 411

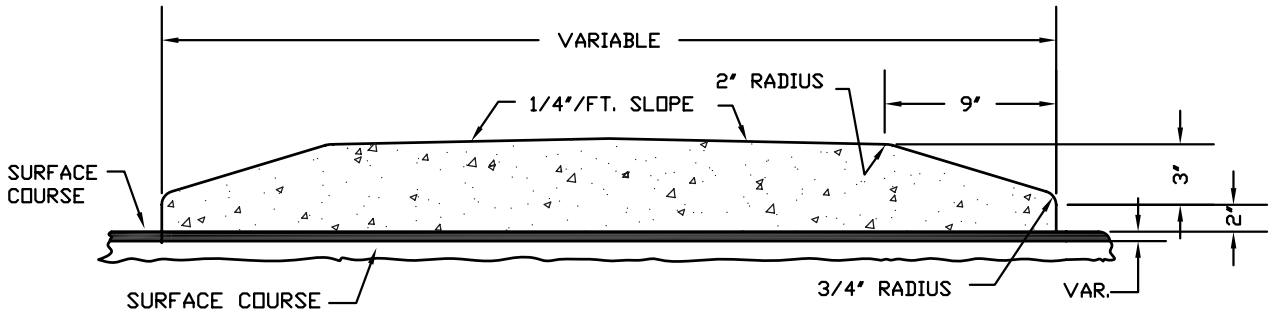

5" MONOLITHIC CONCRETE ISLAND ON BITUMINOUS PAVEMENT

(USE ON ISLAND 4' WIDE OR GREATER)

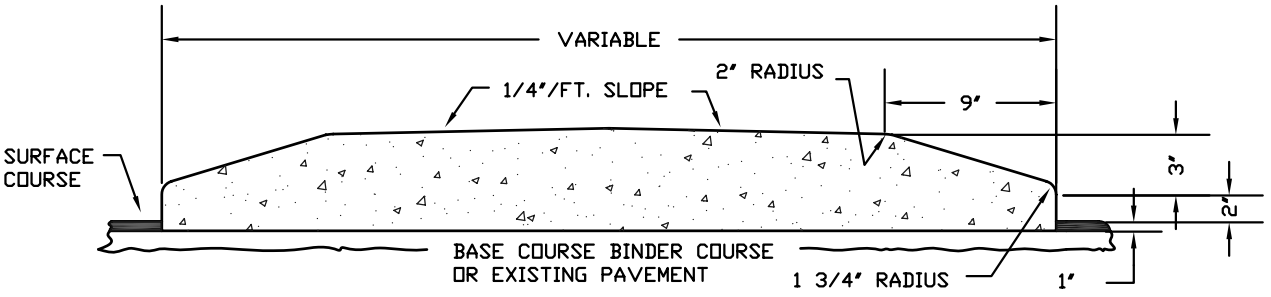

MONOLITHIC CONCRETE ISLAND ON BITUMINOUS PAVEMENT

(USE ON ISLAND LESS THAN 4' WIDE)

NOT TO SCALE

CITY OF HICKORY

REVISIONS			CONCRETE ISLANDS	DATE: 2-1-07
NO.	DATE	DESCRIPTION		SHEET 1 OF 3
				STD. NO. 412.1

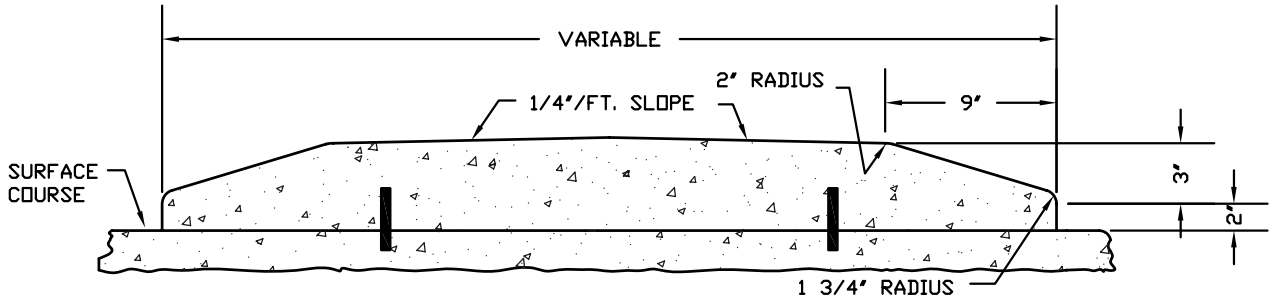

5" MONOLITHIC CONCRETE ISLAND ON BITUMINOUS PAVEMENT

(USE ON ISLAND 4' WIDE OR GREATER)

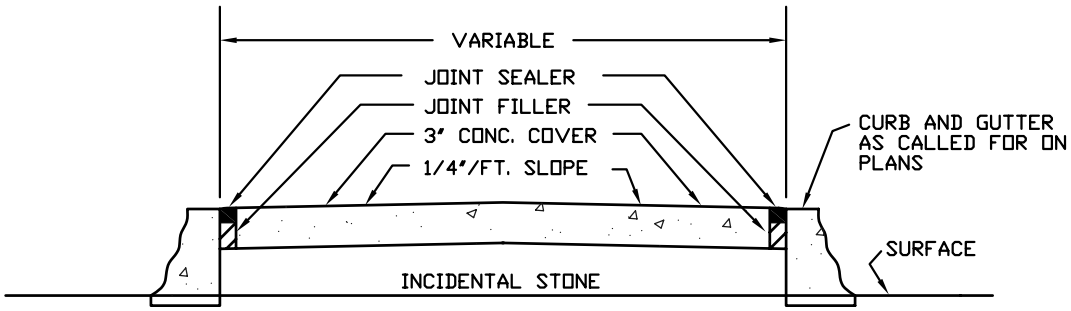

PAVED CONCRETE ISLAND

NOT TO SCALE

Hickory	CITY OF HICKORY			
	REVISIONS		CONCRETE ISLANDS	DATE: 2-1-07
	NO.	DATE	DESCRIPTION	SHEET 2 OF 3
				STD. NO. 412.2

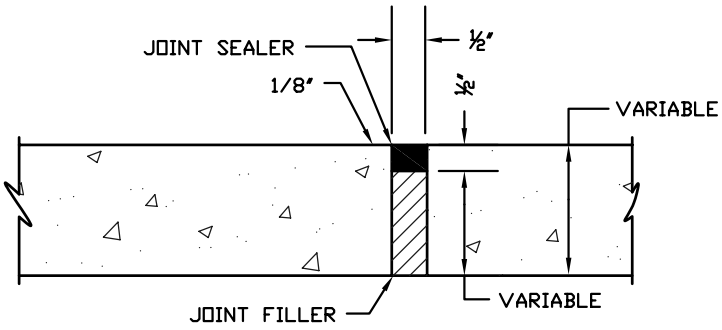

SHOWING EXPANSION JOINT

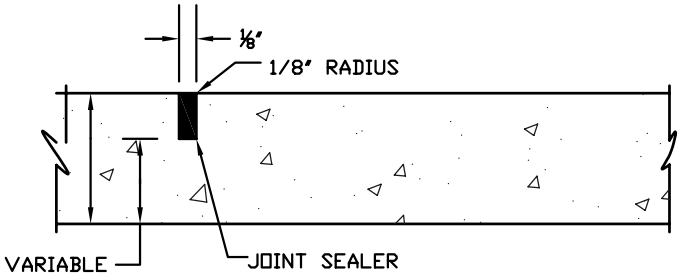

SHOWING GROOVED JOINT

PART LONGITUDINAL SECTION
OF PAVED ISLANDS

NOTE:
WHEN MONOLITHIC CONCRETE ISLAND IS ON TOP OF SURFACE COURSE 40D SPIKES SHALL BE DRIVEN INTO SURFACE UNDER MONOLITHIC CONCRETE ISLANDS. SPIKES SHALL BE STAGGERED ON 2' CENTERS EACH WAY.
IN THE CONCRETE PAVEMENT (ISLAND) AND CONCRETE ISLAND (MONOLITHIC) PLACE 1/2" EXPANSION JOINTS AT 30' INTERVALS AND GROOVED JOINTS 1" DEEP AT 10' INTERVALS BETWEEN EXPANSION JOINTS.
THE JOINTS IN THE CONCRETE PAVEMENT (ISLAND) SHALL LINE UP WITH THE JOINTS IN THE CURB OR CURB AND GUTTER.
THE TOP 1/2' OF THE EXPANSION JOINTS AND THE ENTIRE DEPTH OF GROOVED JOINTS SHALL BE FILLED AND SEALED WITH JOINT SEALER.

NOT TO SCALE

CITY OF HICKORY

REVISIONS			CONCRETE ISLANDS JOINT DETAILS	DATE: 2-1-07
NO.	DATE	DESCRIPTION		SHEET 3 OF 3
				STD. NO. 412.3