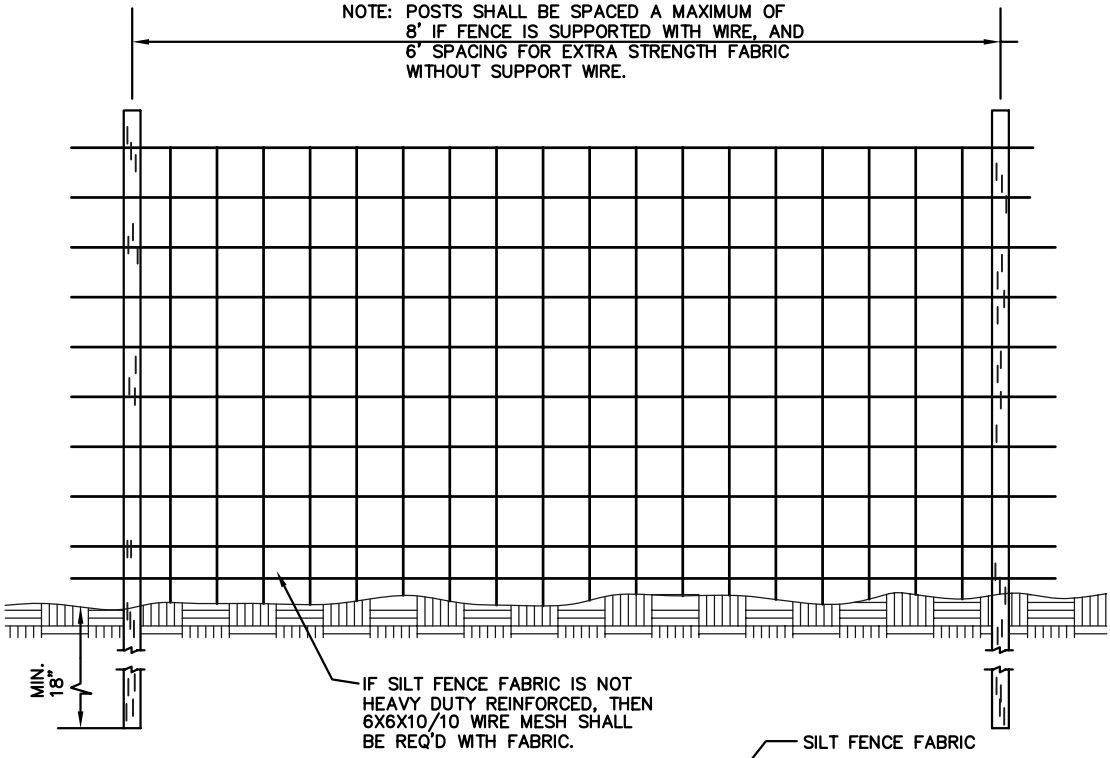

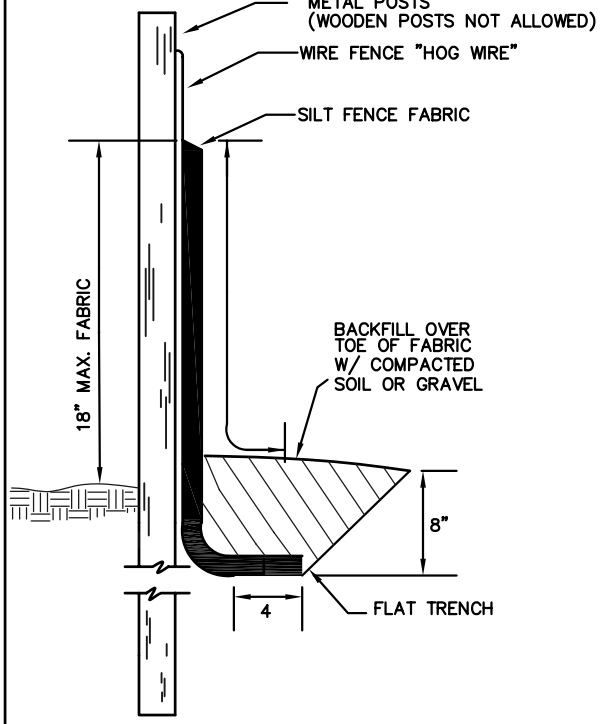

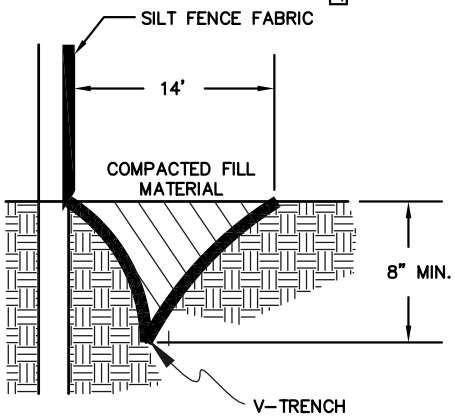

ALTERNATE TRENCHING DETAIL

GENERAL NOTES

1) FENCE FABRIC SHALL BE A MINIMUM OF 32" IN WIDTH AND SHALL HAVE A MINMUM OF 6 LINE WIRES WITH 12" STAY SPACING.

2) SILT FENCE FABRIC SHALL BE SYNTHETIC OR OTHER APPROVED MATERIAL MEETING AN 85% MIN. FILTERING EFFICIENCY AND MIN. 30 LB./ LIN IN TENSILE STRENGTH WITH A MIN 6 MONTH EXPECTED USEABLE CONSTRUCTION LIFE. INSTALL FABRIC IN ACCORDANCE WITH MANUFACTURER'S INSTRUCTIONS.

3) STEEL POST SHALL BE THE SELF-FASTENER ANGLE STEEL TYPE.

NOT TO SCALE

CITY OF HICKORY

REVISIONS			TEMPORARY SILT FENCE	DATE: 2-1-07
NO.	DATE	DESCRIPTION		SHEET 1 OF 1
				STD. NO. 102

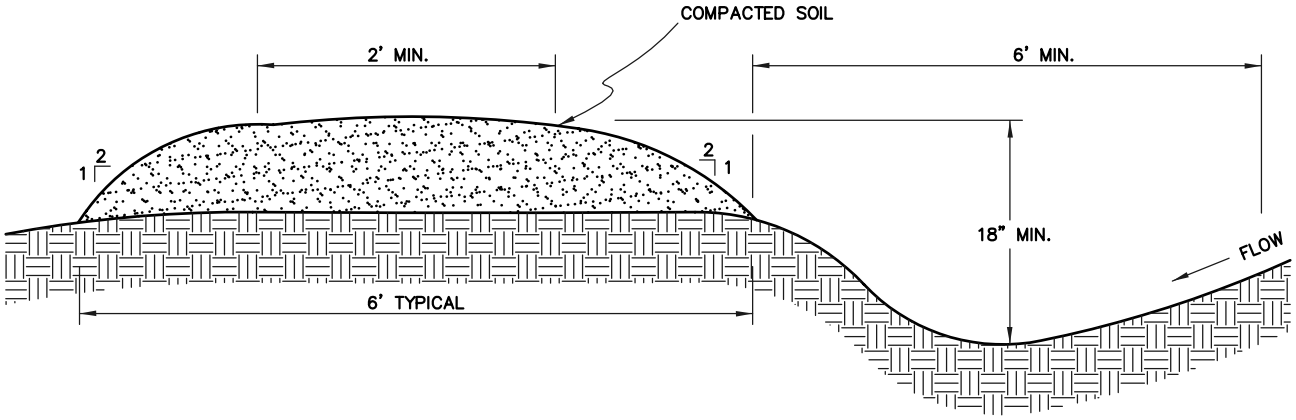

NOT TO SCALE

CITY OF HICKORY				
REVISIONS			TEMPORARY DIVERSION CROSS-SECTION	DATE: 2-1-07
NO.	DATE	DESCRIPTION		SHEET 1 OF 1
				STD. NO. 103

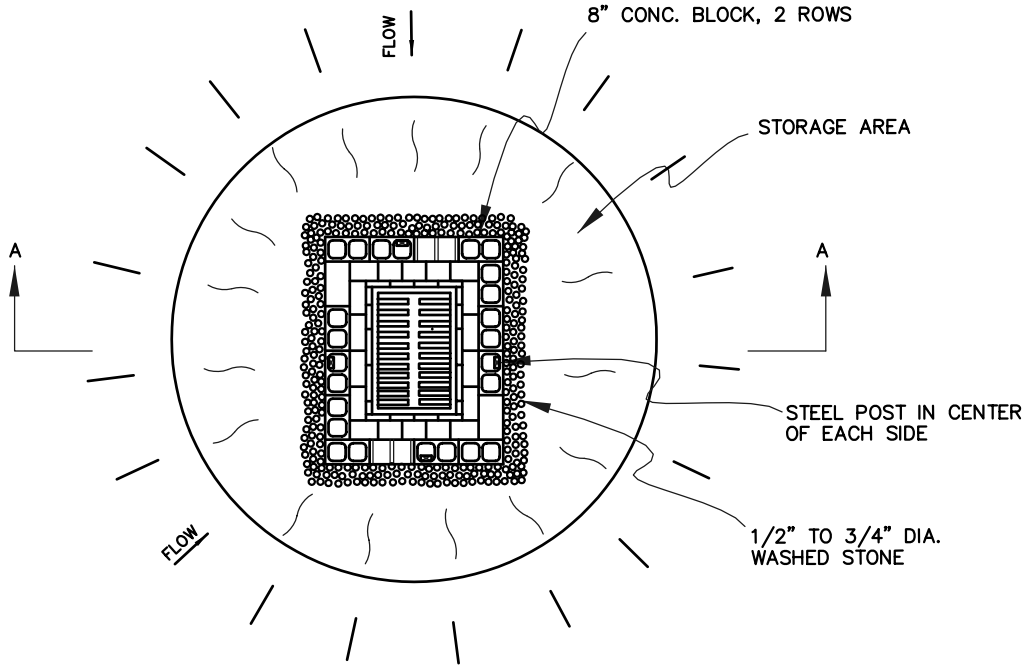

PLAN VIEW

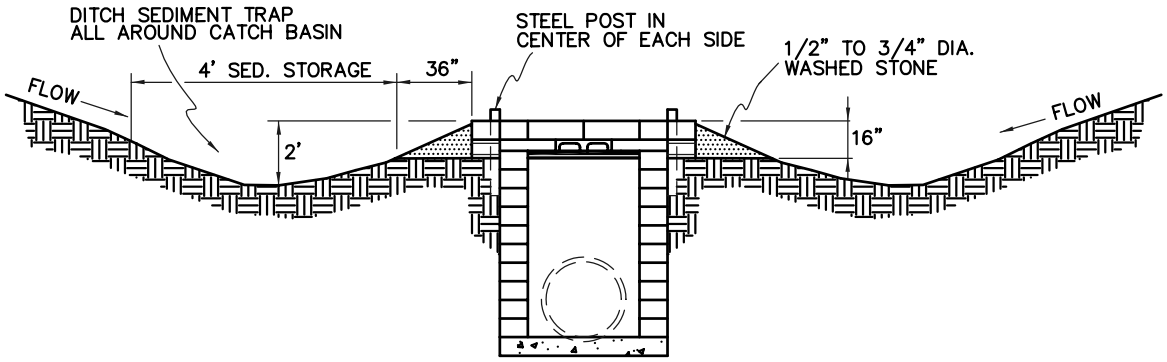

SECTION A–A

GENERAL NOTES:

SEDIMENT SHALL BE REMOVED AND TRAP RESTORED TO ITS ORIGINAL DIMENSIONS WHEN THE SEDIMENT HAS ACCUMULATED TO 1/2 THE DESIGN DEPTH OF THE TRAP. REMOVED SEDIMENT SHALL BE DEPOSITED IN A SUITABLE AREA AND IN SUCH A MANNER THAT IT WILL NOT ERODE.

THE STRUCTURE SHALL BE INSPECTED AFTER EACH RAIN AND REPAIRS MADE AS NEEDED.

CONSTRUCTION OPERTIONS SHALL BE CARRIED OUT IN SUCH A MANNER THAT EROSION AND WATER POLLUTION SHALL BE MINIMIZED.

THE SEDIMENT TRAP SHALL BE REMOVED AND THE AREA STABILIZED WHEN THE REMAINING DRAINAGE AREA HAS BEEN PROPERLY STABILIZED.

NOT TO SCALE

CITY OF HICKORY

REVISIONS				
NO.	DATE	DESCRIPTION	BLOCK & GRAVEL DROP INLET PROTECTION	DATE: 2–1–07
				SHEET 1 OF 1
				STD. NO. 104

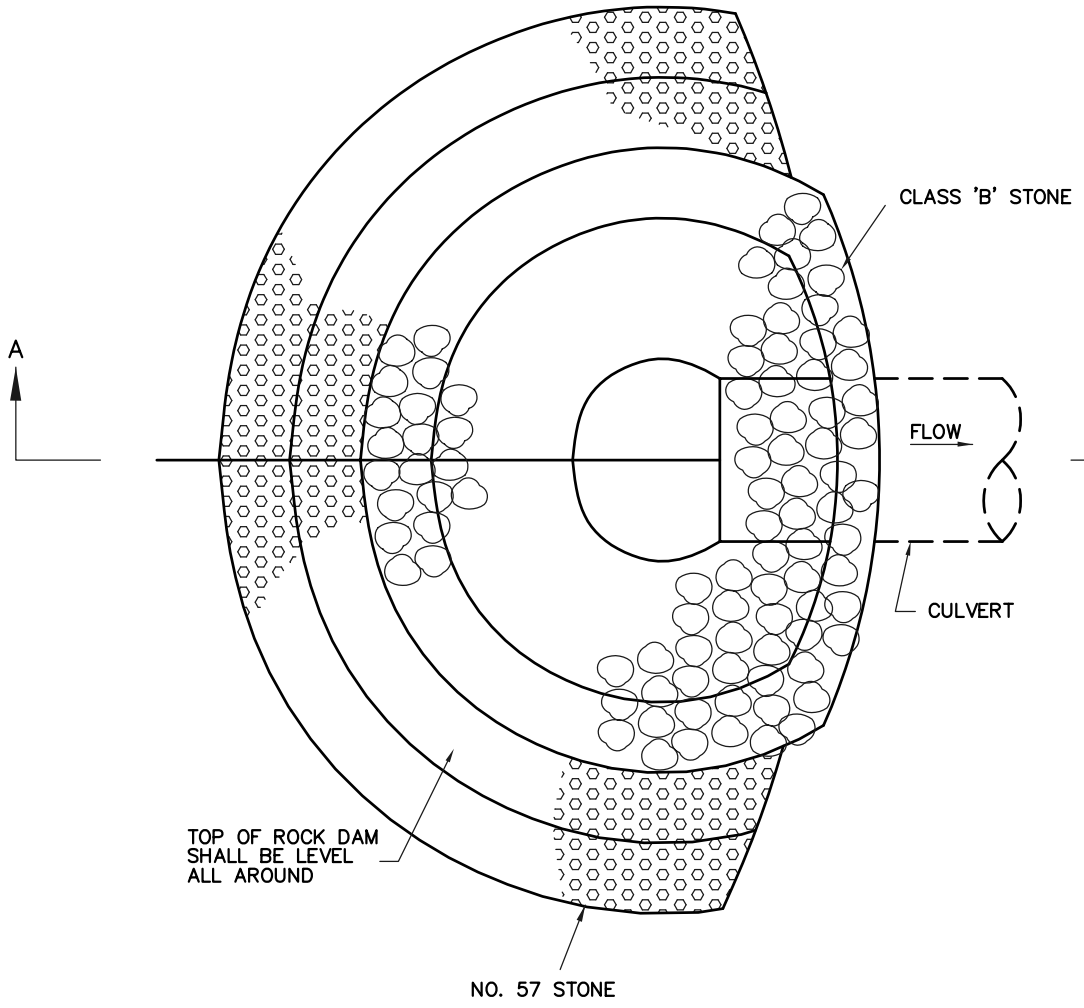

PLAN VIEW

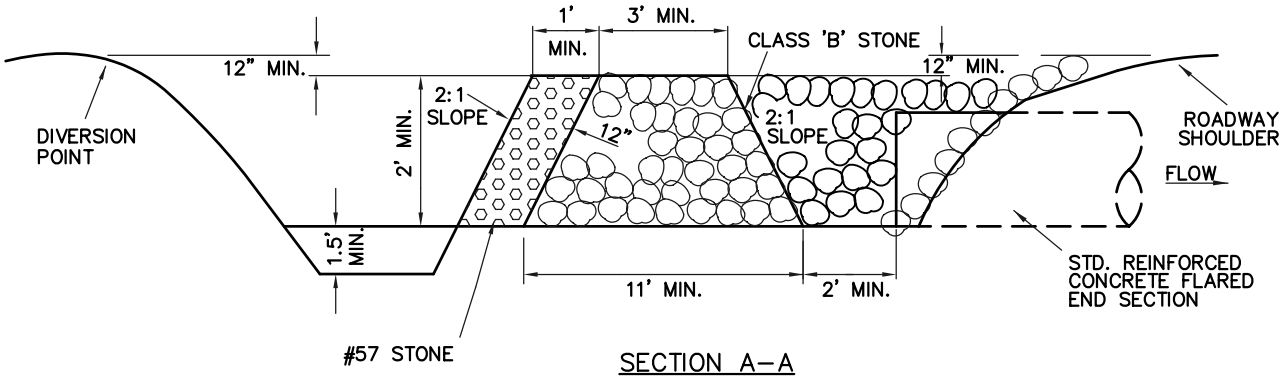

SECTION A–A

NOT TO SCALE

Hickory	CITY OF HICKORY			
	REVISIONS		ROCK PIPE INLET SEDIMENT TRAP	DATE: 2–1–07
	NO.	DATE	DESCRIPTION	SHEET 1 OF 1
				STD. NO. 105

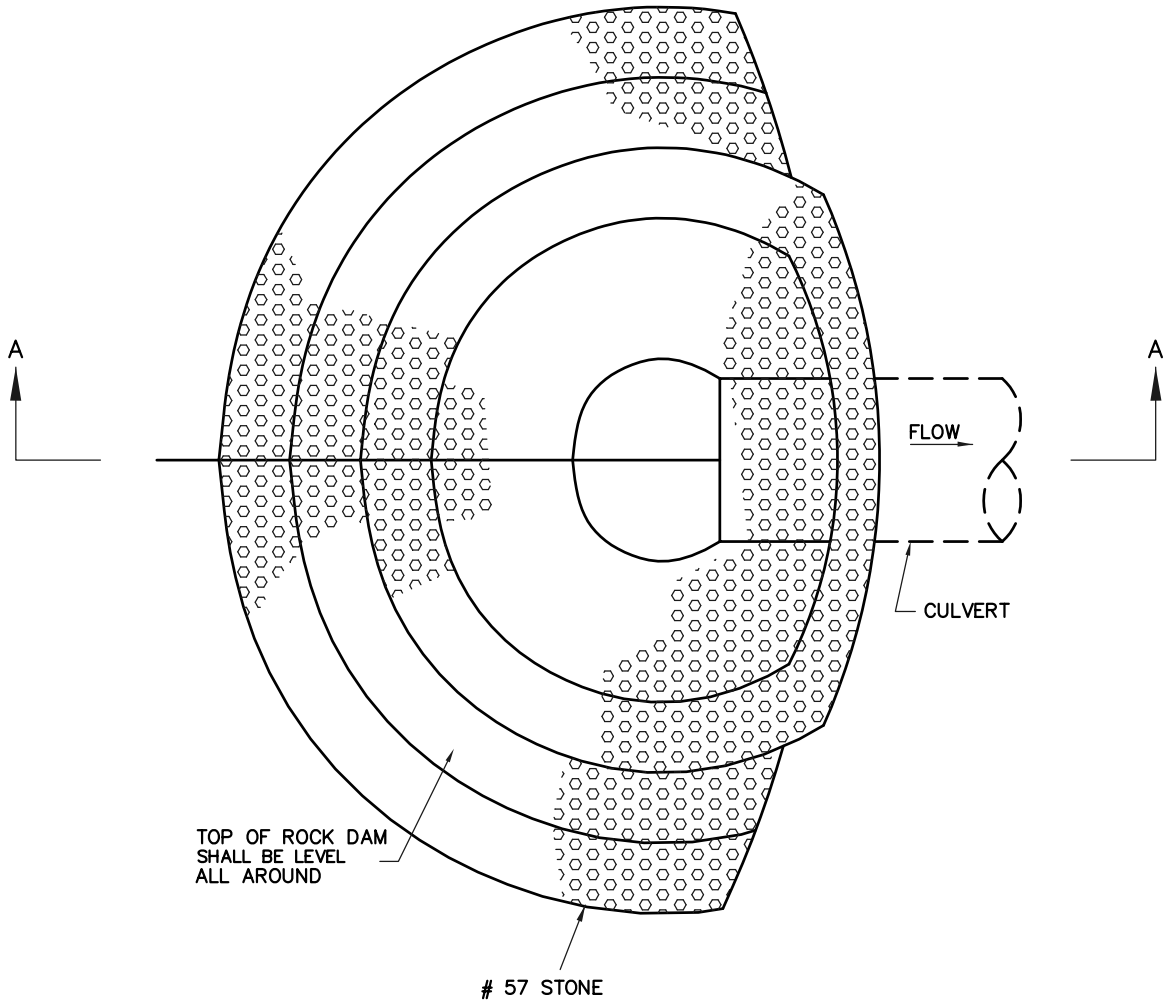

PLAN VIEW

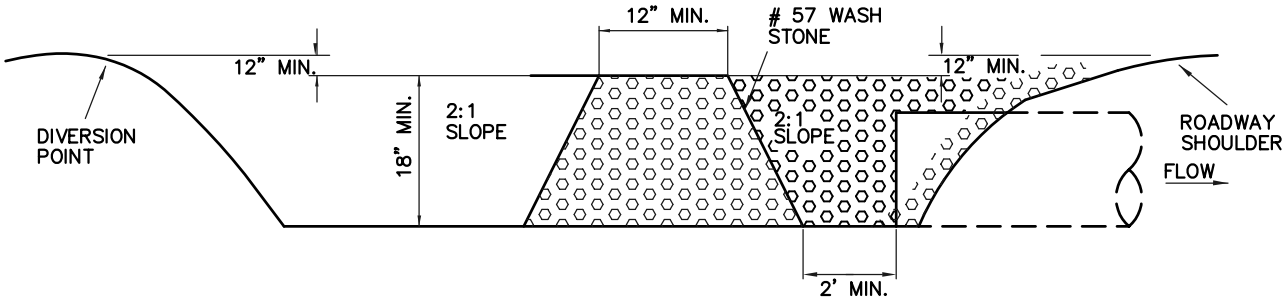

SECTION A–A

NOT TO SCALE

Hickory	CITY OF HICKORY			
	REVISIONS		MODIFIED SMALL DRAINAGE AREA ROCK PIPE INLET SEDIMENT TRAP	DATE: 2–1–07
	NO.	DATE	DESCRIPTION	SHEET 1 OF 1
				STD. NO. 106

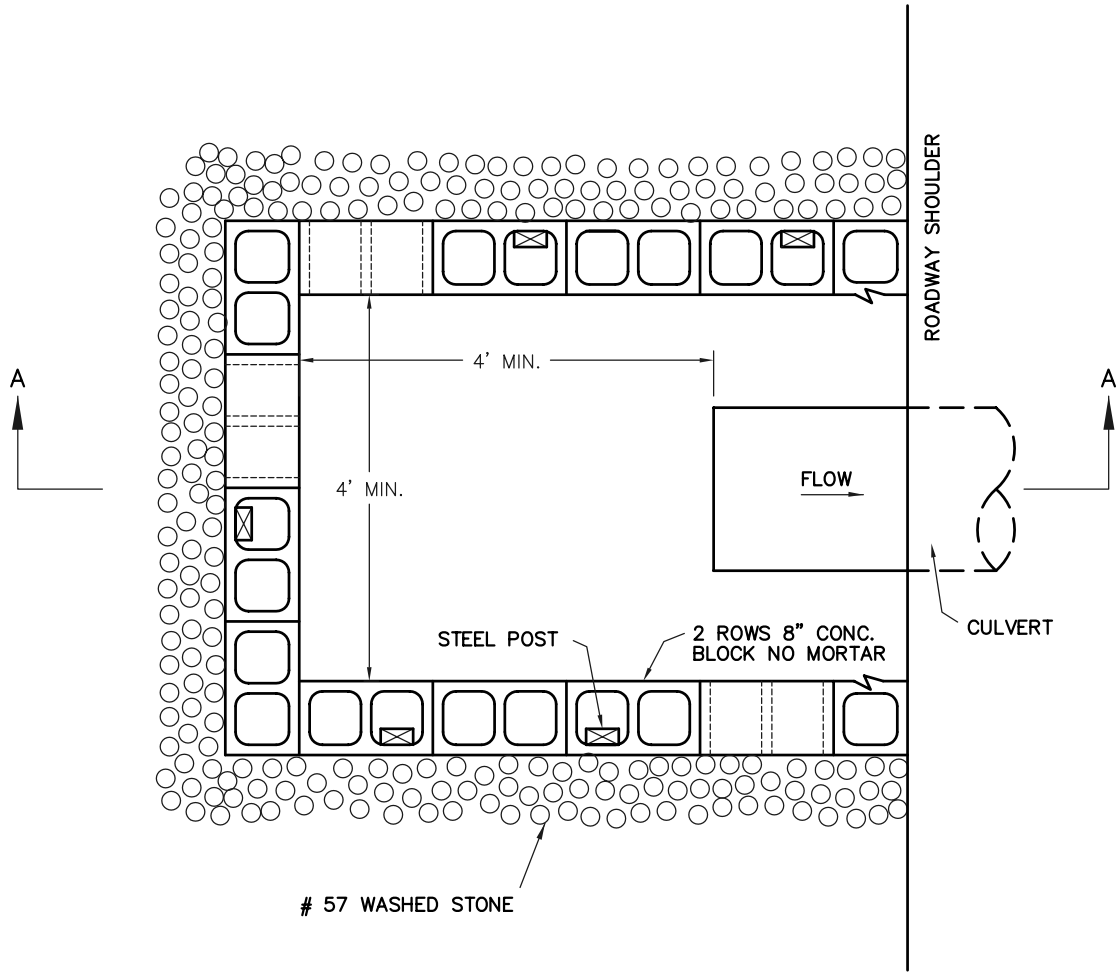

PLAN VIEW

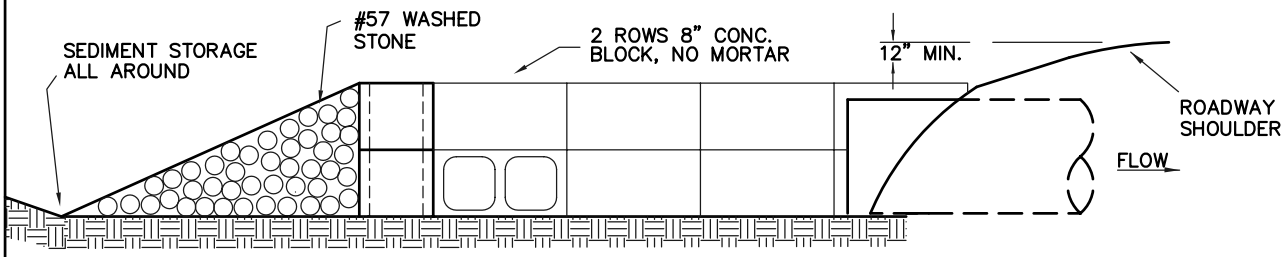

SECTION A–A

NOT TO SCALE

CITY OF HICKORY

REVISIONS		
NO.	DATE	DESCRIPTION

BLOCK & GRAVEL
PIPE INLET PROTECTION

DATE: 2–1–07

SHEET 1 OF 1

STD. NO. 107

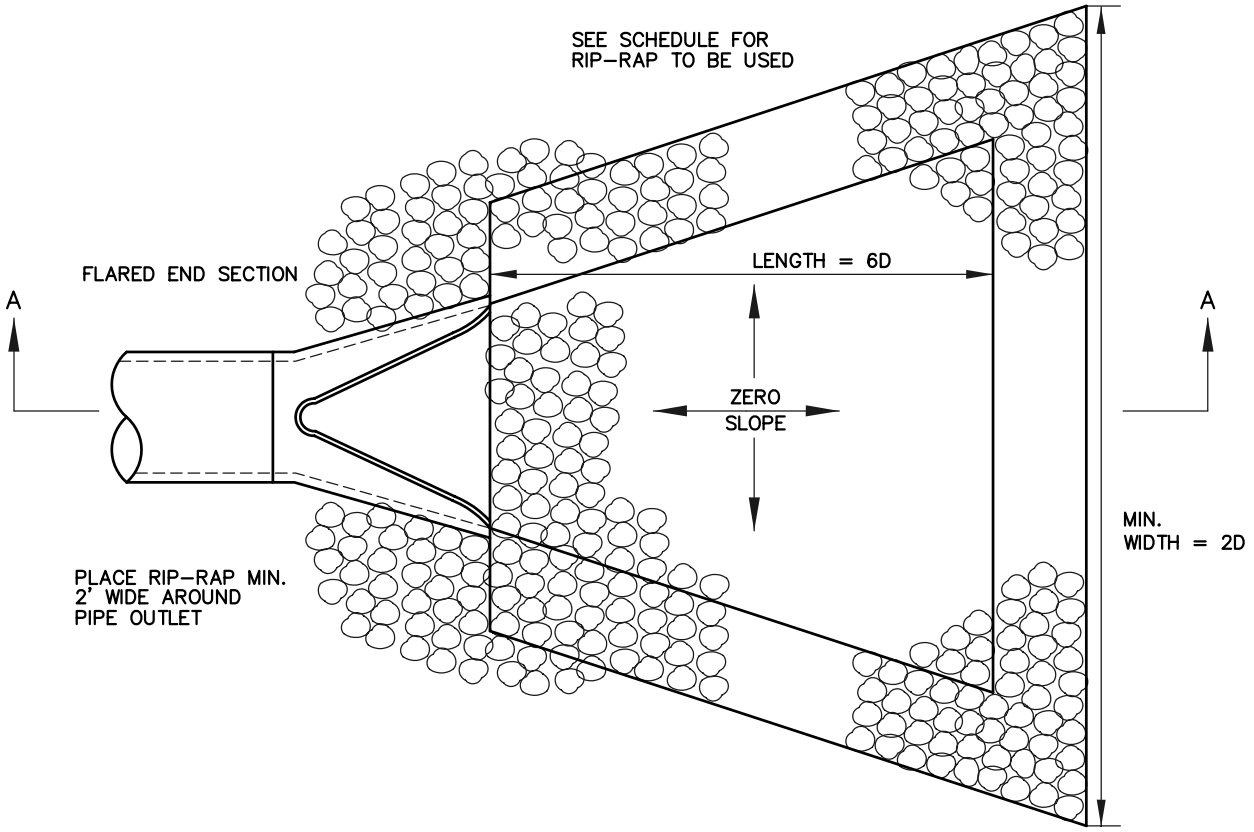

PLAN VIEW

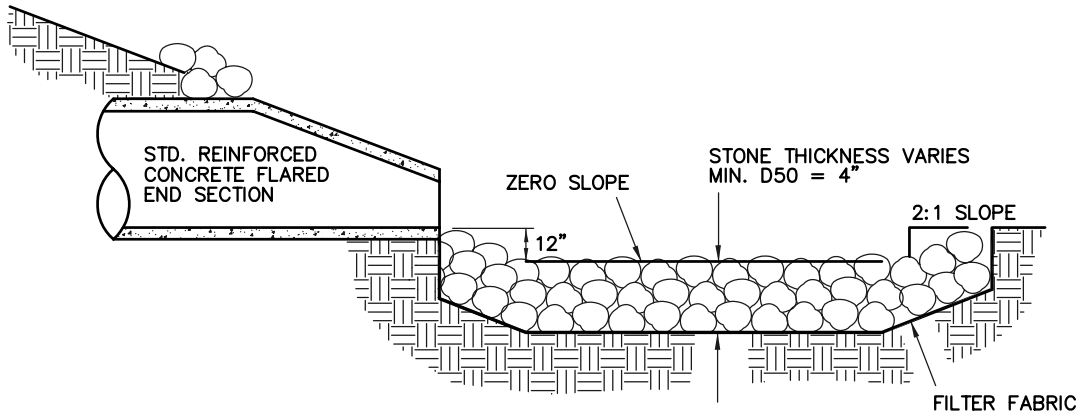

SECTION A-A

NOT TO SCALE

CITY OF HICKORY

REVISIONS			RIP-RAP OUTLET PROTECTION	DATE: 2-1-07
NO.	DATE	DESCRIPTION		SHEET 1 OF 1
				STD. NO. 108

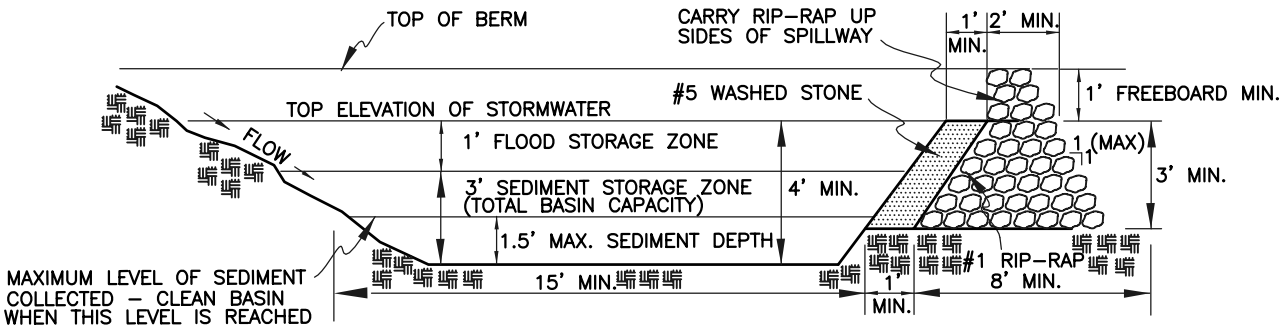

SECTION THRU BASIN & FILTER

GRAVEL & RIP-RAP FILTER BASIN DETAIL

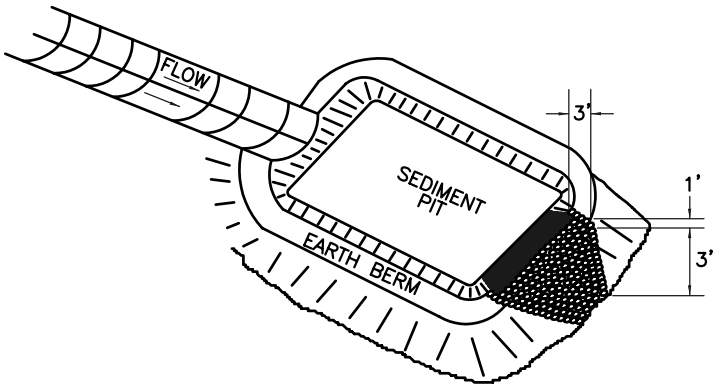

PERSPECTIVE VIEW

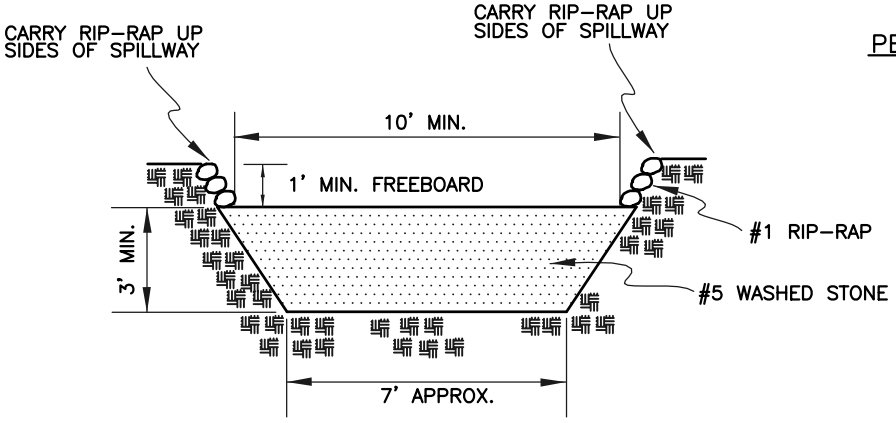

SECTION THRU BASIN & FILTER

NOTE: THIS STRUCTURE MUST BE DESIGNED TO PASS THE 10-YEAR STORM WITHOUT OVERTOPPING THE EARTH BERM.

NOT TO SCALE

Hickory	CITY OF HICKORY			
	REVISIONS		GRAVEL & RIP-RAP FILTER BASIN DETAIL	DATE: 2-1-07
	NO.	DATE	DESCRIPTION	SHEET 1 OF 1
				STD. NO. 109

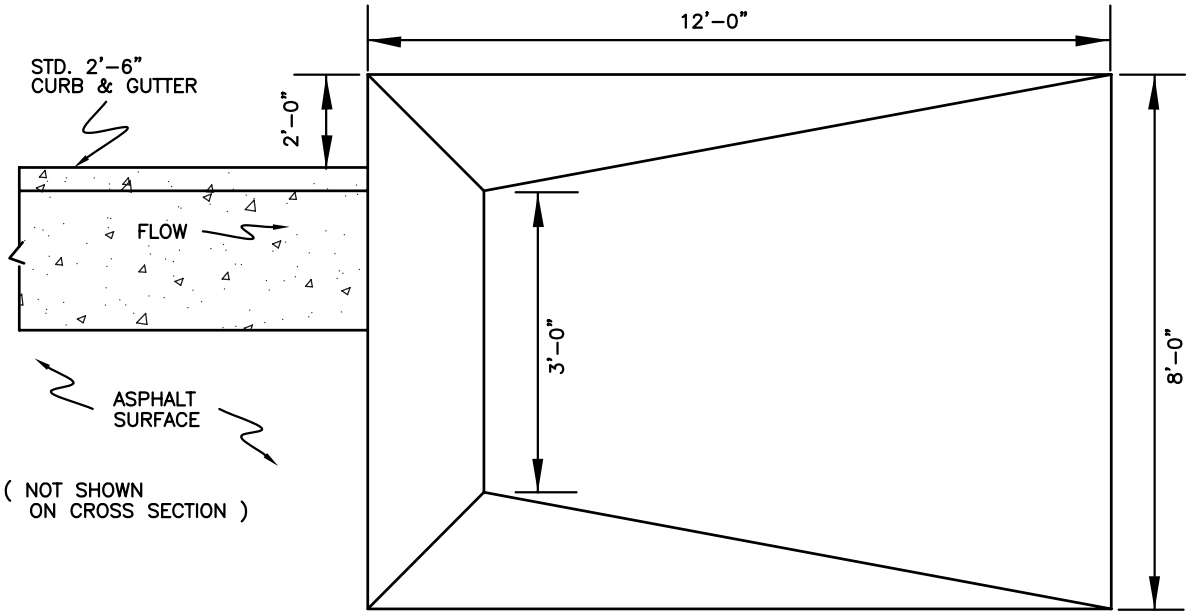

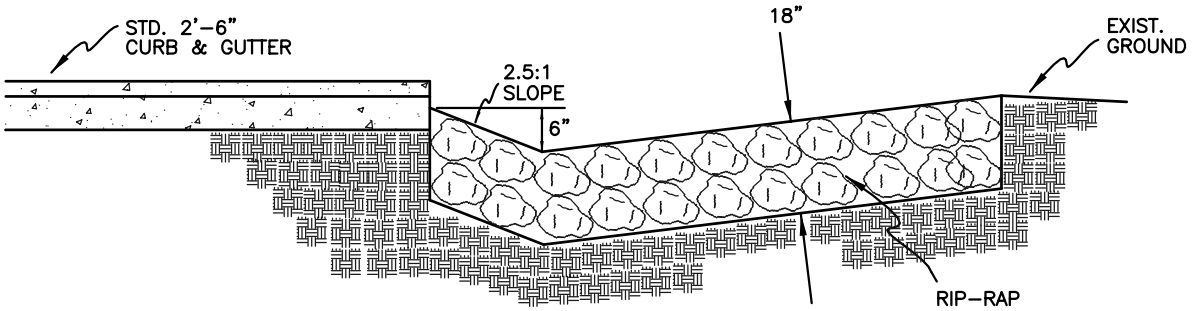

CLASS 1 RIP-RAP TO BE USED.

QUANITY OF RIP-RAP REQUIRED FOR
ONE GUTTER WILL BE 12 S.Y.

NOT TO SCALE

CITY OF HICKORY

REVISIONS		
NO.	DATE	DESCRIPTION

DEAD END STREET
EROSION CONTROL DEVICE

DATE:
2-1-07

SHEET 1 OF 1

STD. NO.
110

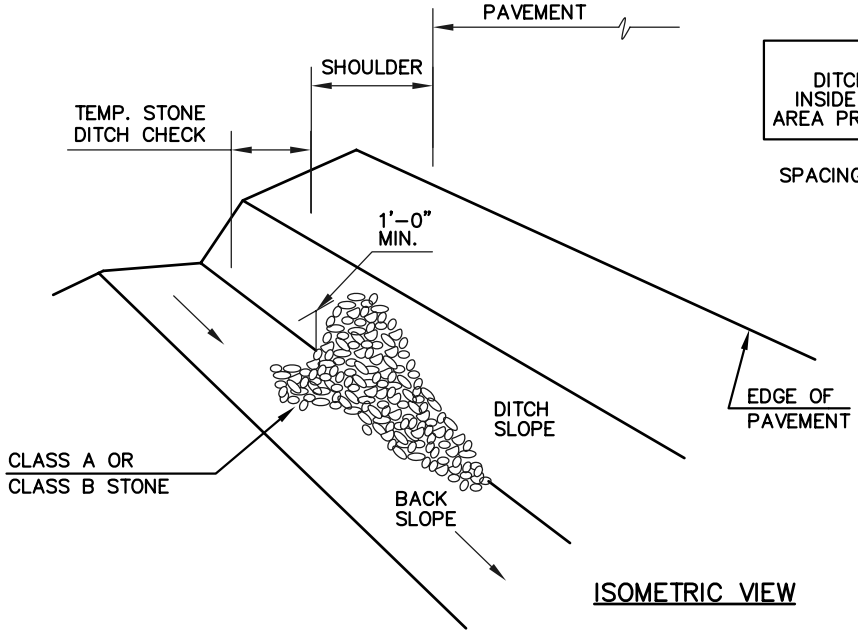

NOTE:
DITCH CHECKS TO BE REMOVED INSIDE CLEAR ROADSIDE RECOVERY AREA PRIOR TO TRAFFIC OPERATIONS.

$$\text{SPACING} = \frac{\text{HEIGHT OF DITCH CHECK}}{\text{SLOPE (\%)}} \times 100$$

ISOMETRIC VIEW

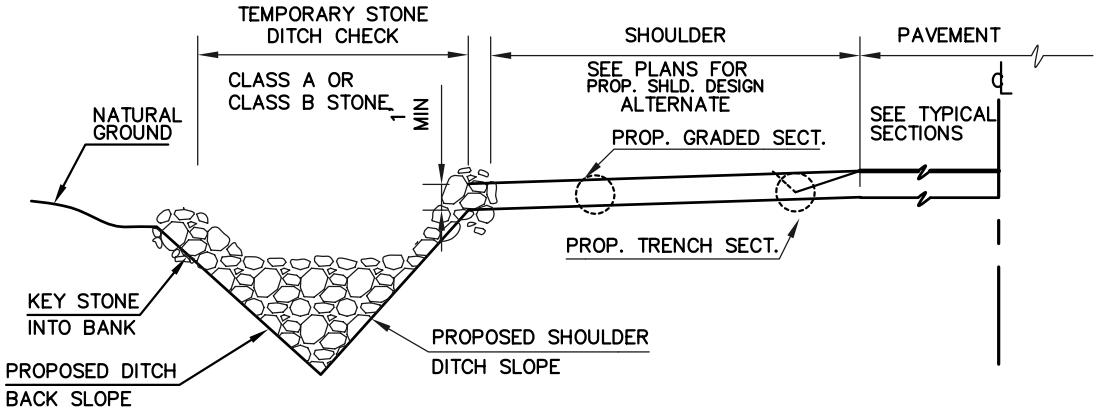

TYPICAL CROSS SECTION

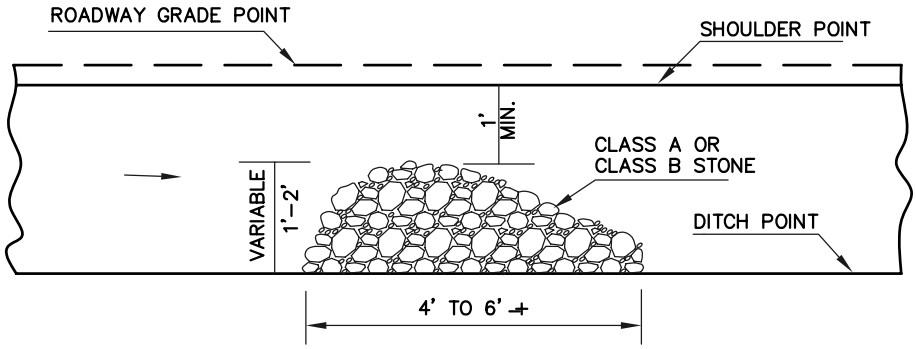

TYPICAL LONGITUDINAL SECTION

QUANTITY APPROXIMATELY 1 TO 2 TONS STONE

NOT TO SCALE

CITY OF HICKORY

REVISIONS			TEMPORARY STONE DITCH CHECK	DATE: 2-1-07
NO.	DATE	DESCRIPTION		SHEET 1 OF 1
				STD. NO. 112

*NOTE: SEE EROSION CONTROL PLAN
FOR PIPE SIZE

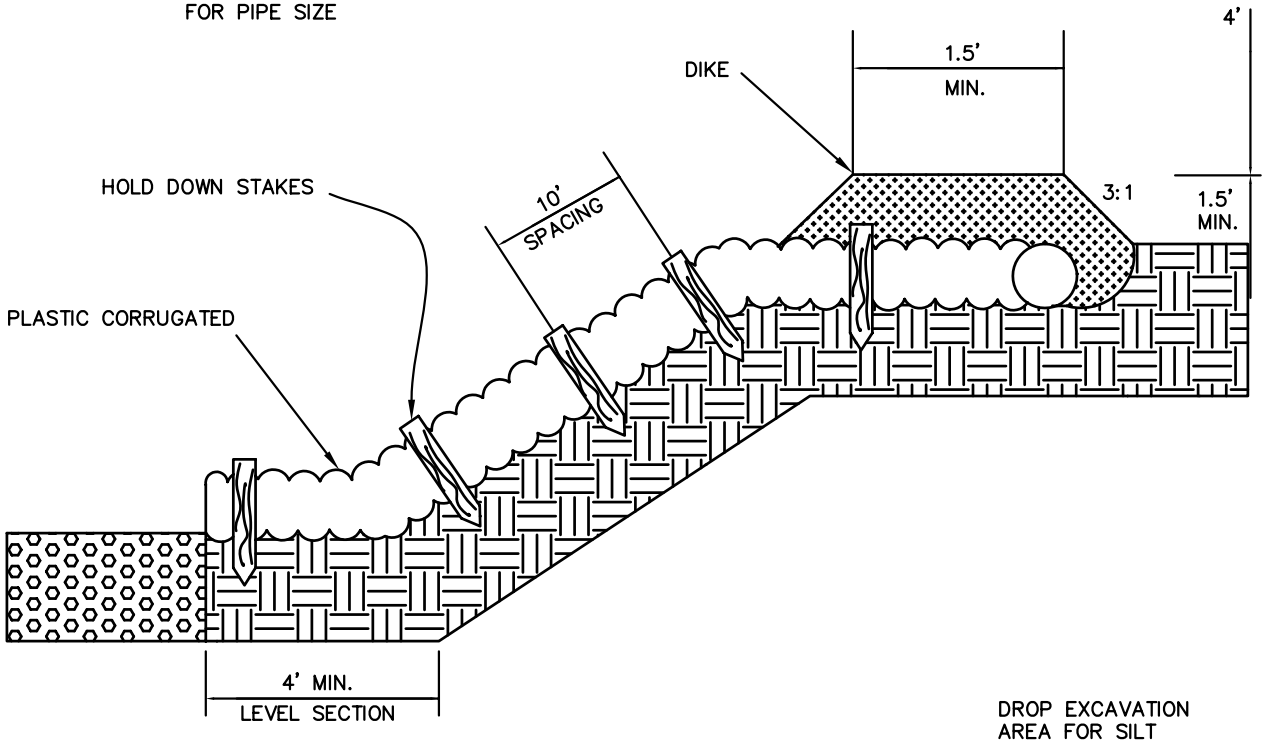

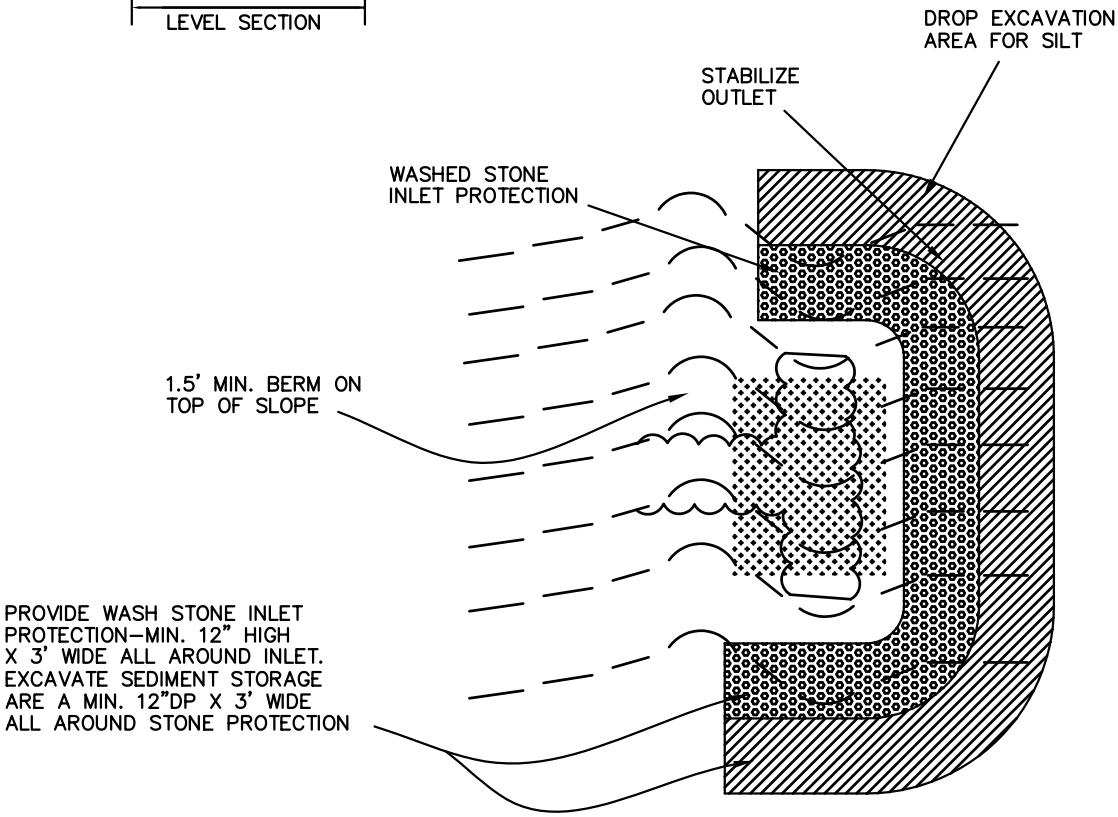

PLAN VIEW
STANDARD T–SECTION

NOT TO SCALE

CITY OF HICKORY

REVISIONS			TEMPORARY SLOPE DRAIN DETAIL	DATE: 2–1–07
NO.	DATE	DESCRIPTION		SHEET 1 OF 1
				STD. NO. 113

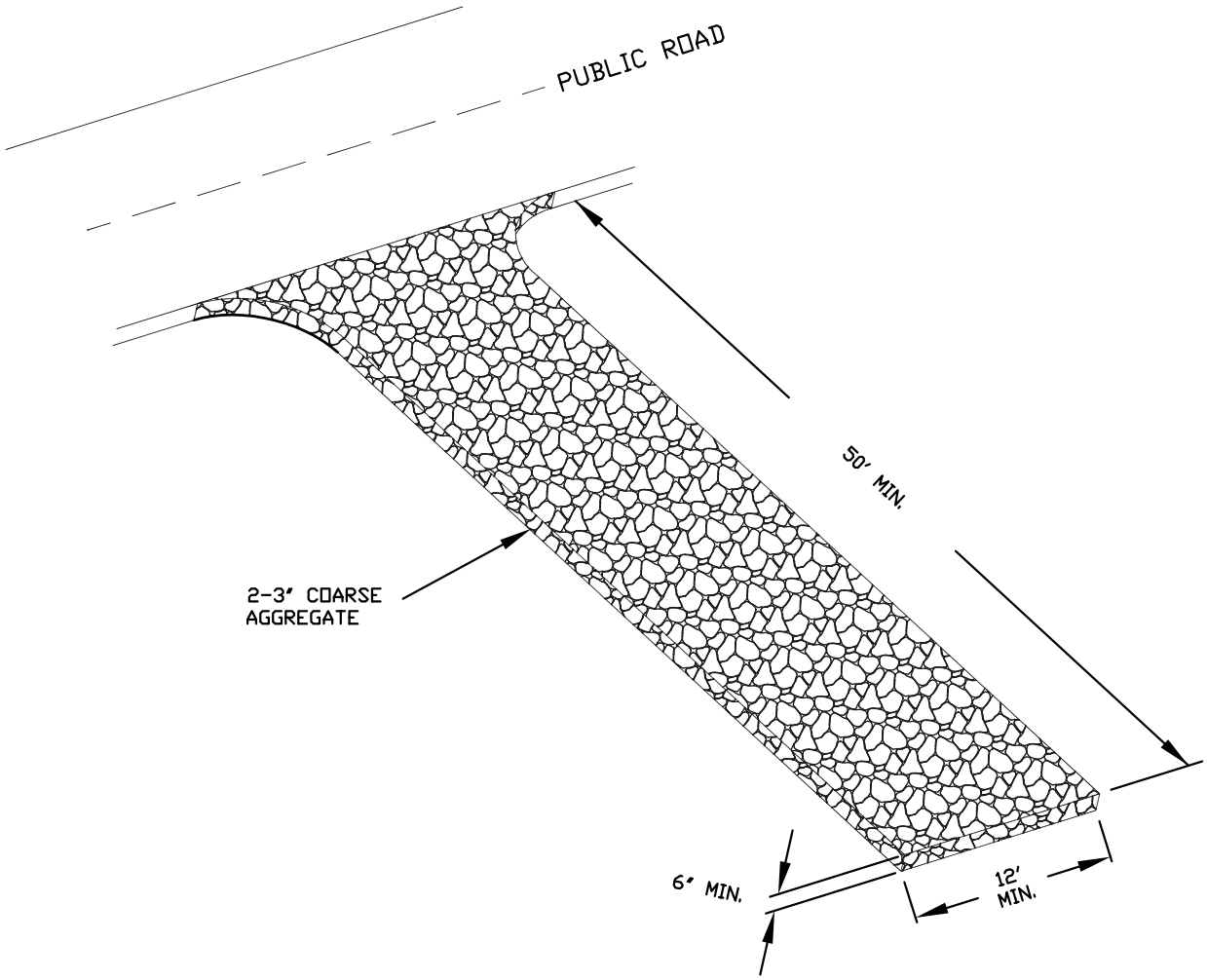

NOTE:
1. TEMPORARY GRAVEL CONSTRUCTION ENTRANCE SHALL BE PERIODICALLY MAINTAINED TO REMOVE MUD & SOIL BUILDUP.

2. CRUSHER-RUN STONE IS NOT ACCEPTABLE

NOT TO SCALE

CITY OF HICKORY

REVISIONS			TEMPORARY GRAVEL CONSTRUCTION ENTRANCE	DATE: 2-1-07
NO.	DATE	DESCRIPTION		SHEET 1 OF 1
				STD. NO. 114