A G E N D A

HICKORY CITY COUNCIL

December 1, 2026

HICKORY
North Carolina ®
Life. Well Crafted.

6:00 p.m.

AGENDA
www.hickorync.gov

If you have any questions about any item on this agenda or if you need more information about any item in addition to the information contained in the agenda package, please call the City Manager at 323-7412. For more information about the City of Hickory go to: www.hickorync.gov.

Hickory City Council
76 North Center Street

December 1, 2026
6:00 p.m.

I. Call to Order

II. Invocation by Reverend Vern Kinard, Bethlehem Lutheran Church

III. Pledge of Allegiance

IV. Special Presentations

A. Recognition of the Winners from the Christmas Parade – Presentation by Kyle Mishler, Parks, Recreation & Sports Tourism Manager

V. Election of Mayor Pro Tempore for Calendar Year 2027 Pursuant to NC General Statute §160A-70 and Section 2-54 of the Hickory City Code

VI. Appointment of City Attorney for Calendar Year 2027 Pursuant to the Hickory City Code, Section 4.151 of the Charter

VII. Persons Requesting to Be Heard

VIII. Approval of Minutes

A. Regular Meeting of November 17, 2026 **(Exhibit VIII.A.)**

B. Special Joint Meeting of November 23, 2026 **(Exhibit VIII.B.)**

IX. Reaffirmation and Ratification of Second Readings. Votes recorded on first reading will be reaffirmed and ratified on second reading unless Council Members change their votes and so indicate on second reading.

A. Budget Revision Number 9. **(First Reading Vote: Unanimous)**

X. Consent Agenda: All items below are considered to be routine by the City Council and will be enacted by one motion. There will be no separate discussion of these items unless a Council Member so requests. In which event, the item will be removed from the Consent Agenda and considered under Item XI.

A. Approval of the Community Relations Council's Fall 2026 Grant Recommendations. **(Exhibit X.A.)**

The Community Relations Council received seven grant applications requesting a total of $12,990 during the Fall 2026 grant cycle. Following its review, the Community Relations Council recommends awarding three grants totaling $6,000 to support programs that advance the Council's mission of improving human relations and serving diverse

populations in Hickory. Funding is available within the Community Relations Council's budget for the recommended grant. The applicants to be funded include Hickory Music Factory - $2,000; Mechanical Minds, sponsored by the Hack Foundation - $2,000; and Council on Adolescents of Catawba County - $2,000. The Community Relations Council recommends Council's approval of the grants.

B. Approval of Change Order Number 1 with Fuller & Co. Construction, LLC in the Amount of $233,160.35 for the SW Sewer Extension Project. **(Exhibit X.B.)**

Staff requests Council's approval of change order number 1 with Fuller & Co. Construction, LLC in the amount of $233,160.35 for the SW Sewer Extension Project. The project, funded through ARPA funds administered by DWI, extends sewer service and adds a pump station in the southwest corridor south of Mountain View to support anticipated economic development and future growth. The change order reflects adjustments to final as-built quantities and associated overrun and underrun contract items, resulting in a net increase of $233,160.35. It also extends the project completion date by 24 days, to December 22, 2026, due to weather impacts and pump station material lead-time delays. Staff recommends Council's approval of change order number 1.

C. Budget Revision Number 10. **(Exhibit X.C.)**

1. *To appropriate $74,950 in State Treasury Funds to be used for the purchase of two HVAC units at the Hickory Police Department.*
2. *To appropriate $9,400 in General Fund Balance to be used for additional construction needs at the Sandy Pines Park Project.*
3. *To appropriate $4,140 in Water and Sewer Fund Balance for an amendment to the professional services agreement with Gavel and Dorn Engineering for additional field surveying services for the NW Hickory Sewer System Evaluation Project.*

XI. Items Removed from Consent Agenda

XII. Informational Item

XIII. New Business

A. Public Hearings

B. Departmental Reports

1. Approval of a Resolution related to Water and Sewer Infrastructure Agreements with Catawba County – Presented by City Manager Warren Wood. **(Exhibit XIII.B.1)**

   (i) Water & Sewer Infrastructure Asset Transfer
   (ii) Treatment Plant Capacity & Bulk Water Sale
   (iii) Southeastern Catawba County Water & Sewer Operating & Maintenance Agreement

2. Appointments to Boards and Commissions

COMMUNITY APPEARANCE COMMISSION
(Terms Expiring 6-30; 3-Year Terms) Appointed by City Council
Ward 2 (Williams Appoints) VACANT

COMMUNITY RELATIONS COUNCIL
(Terms Expiring 6-30; 3-Year Terms) (Appointed by City Council)
African American (Council Appoints) VACANT
Caucasian (Council Appoints) VACANT
Caucasian (Council Appoints) VACANT

Caucasian (Council Appoints) VACANT
Other Minority (Council Appoints) VACANT

HICKORY REGIONAL PLANNING COMMISSION
(Term Expiring 6-30; 3-Year Terms with Unlimited Appointments) (Appointed by City Council)
Burke County Representative (Mayor Appoints with Recommendation from Burke County) VACANT

LIBRARY ADVISORY BOARD
(Terms Expiring 6-30; 3-Year Terms) (Appointed by City Council)
Ward 4 (Freeman Appoints) VACANT
At-Large (1) (Mayor Appoints) VACANT
At-Large (2) (Mayor Appoints) VACANT

PUBLIC ART COMMISSION
(Terms Expiring 6-30; 3-Year Terms) (Appointed by City Council)
Ward 4 (Freeman Appoints) (Wes Christopher resigned 10-13-26) VACANT

RECYCLING ADVISORY BOARD
(Terms Expiring 6-30; 3-Year Terms) (Appointed by City Council)
Ward 4 (Freeman Appoints) VACANT
Ward 6 (Patton Appoints) VACANT
At-Large (Council Appoints) VACANT
At-Large (Council Appoints) VACANT

Alderwoman Williams to Nominate Christopher Bish as an At-Large Representative on the Recycling Advisory Board.

YOUTH COUNCIL
(Terms Expiring 6-30; 1-Year Terms) (Appointed by City Council)
Homeschool VACANT
St. Stephens High School VACANT

C. Presentation of Petitions and Requests

XIV. Matters Not on Agenda (requires majority vote of Council to consider)

XV. General Comments by Members of Council, City Manager or City Attorney of a Non-Business Nature

XVI. Adjournment

***Hickory City Code Section 2-56. Public Address to Council:**

"When conducting public hearings, considering ordinances, and otherwise considering matters wherein the public has a right to be heard, when it appears that there are persons present desiring to be heard, the Mayor shall require those opposing and favoring the proposed action to identify themselves. Each side of the matter shall be given equal time. Those opposing the proposed action shall be allowed 15 minutes for presentation, followed by 15 minutes for those favoring the action, with the opponents then to have five minutes for rebuttal and the proponents to then have five minutes for surrebuttal. Those persons on either side shall have the right to divide their allotted time among them as they may choose. The Council, by majority vote, may extend the time for each side equally. On matters in which the person desiring to address the Council does not have a legal right to speak, the Council shall determine whether it will hear the person. The refusal to hear a person desiring to speak may be based upon grounds that the subject matter is confidential, that its public discussion would be illegal, that it is a matter not within the jurisdiction of the Council or for any other cause deemed sufficient by the Council. Any person allowed to speak who shall depart from the subject under discussion or who shall make personal, impertinent, or slanderous remarks, or who shall become boisterous while addressing the Council shall be declared out of order by the Mayor, or by vote of the Council, and barred from speaking further before the Council unless permission to continue shall be granted by a majority vote of the Council, under such restrictions as the Council may provide."

The City of Hickory holds all public meetings in accessible rooms. Special requests for accommodation should be submitted by individuals with disabilities at least 48 hours before the scheduled meeting. Phone Services (hearing impaired) – Call 711 or 1-800-735-2962

A Regular Meeting of the City Council of the City of Hickory was held in the Council Chamber of the Municipal Building on Tuesday, November 17, 2026 at 6:00 p.m., with the following members present:

	Hank Guess	
Tony Wood		Anthony Freeman
Charlotte C. Williams	Aldermen	Arnita Dula
Danny Seaver		Jill Patton

A quorum was present.

Also present were City Manager Warren Wood, Deputy City Manager Rodney Miller, Assistant City Manager Steve Miller, Assistant City Manager Yaidee Fox, City Attorney Timothy Swanson, Deputy City Clerk Crystal B. Mundy and City Clerk Debbie D. Miller

I. Mayor Guess called the meeting to order. All Council members were present.

II. Invocation by Senior Pastor Aryn Williams-Ruebel, St. Luke's Methodist Church

III. Pledge of Allegiance

IV. Special Presentations

V. Persons Requesting to Be Heard

A. Mr. Kannan Shew, 221 15th Street SE, Hickory, advised he was back tonight on behalf of Catawba County Action Sports to follow up on their ongoing efforts to preserve, repair, and modernize Stanford Skate Park. Over the past several months, their organization has been working alongside local skaters' families, and small businesses, organizing community sessions at the park and launching a GoFundMe where their community was actively raising their own money to help fund improvements. On top of that, they have a dedicated group of local volunteers ready and willing to help with regular upkeep and maintenance at the park. They were stepping up like this because Stanford Park matters deeply to the City. Built in 2007, it was the only City-maintained skate park in or around Hickory, and for nearly 20 years it had been a positive, active outlook for youth and adults alike. The removal of the halfpipe took away one of the park's centerpiece features, a major draw for skaters of all skill levels. Combined with cracked surfaces and aging ramps, removing core obstacles without replacing them had left the park in rough shape. They knew the City had discussed expanding amenities like pickleball courts, and dog parks, it should not mean shrinking or slowly phasing out an existing thriving community space. Skateboarding was an Olympic sport that continues to grow, and Hickory deserves a complete, well-maintained facility, not half a park. Investing in Stanford Skate Park makes practical sense for the City for 3 big reasons. First, safety and liability. Repairing damaged concrete and maintaining secure obstacles prevents injuries and keeps the City's facility safe for families. Second, protecting downtown property. When skaters have a complete, well-maintained park, they are not forced to skate on stairs, ledges, and private property around Union Square and downtown businesses. Third, the community events and local pride. Bringing back events like the annual Hickory Skate Jam brings skaters, families, and visitors into the City from across the region. With proper repairs and a commitment to replacing lost features like the halfpipe, Stanford Park can be a standout asset that showcases Hickory's support to all types of recreation. They were not asking the City to carry the full weight on its own. Catawba County Action Sports was putting their own money, organization, and sweat equity on the table. Between the funds they were raising through their GoFundMe and their volunteer crew ready to assist with upkeep, they want to partner directly with Parks and Recreation to help fund, maintain, and plan lasting improvements. Please keep Stanford Skate Park intact. Commit to the repairs and feature replacements it needs, and partner with them to keep this space thriving for Hickory's next generation. Thank you.

B. Mr. Danny Powell, 221 15th Street SE, Hickory, was present to talk about skate parks. He started with the word skate park. A lot of times when people hear that term, they hear skate and they do not think about the park part. But a park was a place, an area designated in a city or a town for recreational, ornamental purposes, or preservation. That being said, if they looked at the park side of it, he had noticed a whole lot of things that happened at skate parks that did not just involve skaters. They have kids that go out there all the time, BMX people, scooter kids, and rollerbladers. They have all kinds of things going on. He had actually seen when they were skating in the mornings, on Saturday and Sunday mornings, they see people come dressed really nice with kids out there just to watch people skate at the park. There was nowhere for them to sit, so they would just stand there and watch, but you could tell that they were interested and it was something that they enjoyed watching. He had seen people out there with RC cars. He had seen a dad out there with his kids with RC cars out there jumping the ramps, playing. Kids go out there and practice basketball. There was a whole lot of stuff that goes on at a skate park that does not just involve skaters. It was a place for people to come together and meet and have an open space to where they can do things. Another thing they need to consider too when they were looking at the budget was the skaters in this area were not the only skaters that come to a skate park. He and his buddy Kannan had been known to go to Mooresville, Belmont, and Statesville. They had even been out to Kilbourne in Charlotte. If it was a good skate park, skaters would go to it. The problem that they have with their skate park was a couple of things. It was not modernized. It needs repair. It had a gate around it that they lock up on curfew at 7 o'clock. Right now, it was 7 o'clock every night. There were no lights in the

park, so nothing could be done as soon as it gets dark anyway. This time of year, skaters really need a place to skate, and people like himself who worked till 5 o'clock, it was dark by the time he got home. So just a couple of things to consider. Not so many skaters were coming to their skate park from these areas because there was not a whole lot to offer when it comes to looking at Mooresville, Belmont, and Morganton, they all have concrete parks. They were all open areas. They were all lit at night. It was encouraging for people to come there and not just leave at a certain time. They could stay there and enjoy themselves for a while. So that was all he wanted to say. Just something to consider whenever they were thinking about skate parks. It was not just skaters. It was their community in general. It really showed a lot about their community whenever they contribute to things like that. He appreciated it.

Mayor Guess asked if anyone else wished to address Council. No one else appeared.

Alderman Wood requested that the Parks and Recreation Commission get the minutes of this meeting to hear the comments that were made by Mr. Shew and Mr. Powell.

City Manager Warren Wood confirmed they would take care of the request.

VI. Approval of Minutes

A. Regular Meeting of November 3, 2026.

Alderman Seaver moved, seconded by Alderwoman Patton that the Minutes of November 3, 2026 be approved. The motion carried unanimously.

VII. Reaffirmation and Ratification of Second Readings. Votes recorded on first reading will be reaffirmed and ratified on second reading unless Council Members change their votes and so indicate on second reading.

Alderwoman Patton moved, seconded by Alderwoman Dula that the following be reaffirmed and ratified on second reading. The motion carried unanimously.

A. Budget Revision Number 8. (First Reading Vote: Unanimous)

VIII. Consent Agenda: All items below will be enacted by vote of City Council. There will be no separate discussion of these items unless a Council Member so requests. In which event, the item will be removed from the Consent Agenda and considered under Item IX.

Alderwoman Patton moved, seconded by Alderman Freeman approval of the Consent Agenda. The motion carried unanimously.

A. Approved the Purchase and Up-Fit of Nine Specialized Police Package Emergency Vehicles from Parks Ford, Utilizing the NC Sheriff's Association Contract, in the Amount of $611,065.76.

Hickory Police Department requests Council's approval of the purchase and upfitting of nine all-wheel drive 2027 Ford Police Interceptor Utility Hybrid vehicles from Parks Ford utilizing the NC Sheriff's Association contract. This will include eight regular patrol vehicles and one canine use patrol vehicle for a total cost of $611,065.76. Funds are budgeted in the FY 2026/2027 CIP. Parks Ford has partnered with Brooks Network Services, LLC to provide the total turnkey up-fitting of these vehicles. Staff recommends approval of the purchase of these specialized emergency vehicles from Parks Ford.

B. Approved a Resolution Accepting an Offer to Sell a City-Owned Parcel to Legacy Home Builders, North Carolina, LLC in the Amount of $30,000.

Staff requests Council's approval of a Resolution accepting an offer from Legacy Home Builders, North Carolina, LLC in the amount of $30,000 for a City-owned parcel located at 401 2nd Street Place SW. The parcel is identified as GIS PIN 3702-07-57-1931, containing a total of .27 acre in size and currently undeveloped. The tax value of the parcel is $6,300. Legacy Home Builders North Carolina LLC has offered $30,000 for the parcel. The property would be sold subject to the upset bid statute to allow other interested parties to bid on the property. Staff recommends that Council adopt a Resolution accepting the offer from Legacy Home Builders, North Carolina, LLC and authorize staff to advertise for upset bids.

RESOLUTION NO. 26-59
RESOLUTION AUTHORIZING THE ADVERTISEMENT OF
AN OFFER TO PURCHASE CERTAIN PROPERTY

WHEREAS, City Council of the City of Hickory desires to dispose of certain surplus properties of the City of Hickory.

NOW, THEREFORE, BE IT RESOLVED BY THE CITY COUNCIL THAT:

1. The following properties described are hereby declared to be surplus to the needs of the City of Hickory:

   Property located at 401 2nd Street Place SW, Hickory, containing a total of approximately .27 acres, identified as Catawba County GIS PIN 3702-07-57-1931.

2. City Council has received an offer to purchase for the sum of $30,000, the property located at 401 2nd Street Place SW, Hickory, containing a total of approximately .27 acres, identified as Catawba County GIS PIN 3702-07-57-1931. The person making the offer must deposit the sum equal to five percent (5%) of his or her offer, to Young, Morphis, Bach & Taylor Trust Account in accordance with the Real Estate Purchase Agreement.

3. City Council proposes to accept the offer unless a qualifying upset bid shall be made.

4. The City Clerk shall cause a notice of such offer to be published in accordance with G.S. 160A-269.

5. Persons wishing to upset the offer must submit a sealed bid to the City Clerk within ten (10) days after publication of the notice. A five per cent (5%) bid deposit in the form of cash, cashier's check, or wired funds is required for each upset bid. In addition, the bid must raise the original offer by amount of at least 10% of the first $1000 of that offer and 5% of the remainder. At the conclusion of the ten (10) days, the City Clerk shall open the bids, and the highest such bid will become the new offer. If there is more than one bid in the highest amount, the first such bid received will become the new offer.

6. If a qualifying upset bid is received, the City Clerk is directed to re-advertise the offer at the increased upset bid amount, and to continue with this process until a ten (10) day period has passed without receipt of a qualifying upset bid.

7. Upon approval of the final upset bid, total payment for the properties must be received by the City of Hickory within 30 days of the bid award.

8. City Council authorizes the City Manager to execute all documents related to the sale if no upset bids are received after due advertisement.

C. Approved a Resolution Supporting Two Supplemental Grant Applications to the Greater Hickory Metropolitan Planning Organization for Surface Transportation Block Grant Funds, for Total Supplemental Funding not to Exceed $1,240,000.

Staff requests approval of a Resolution supporting two supplemental grant applications to the Greater Hickory Metropolitan Planning Organization (GHMPO) for Surface Transportation Block Grant funds in amounts not to exceed $760,000 for BL-0066 – Springs Road Sidewalk and $480,000 for BL-0067 – Aviation Walk Connector, for a total supplemental funding request not to exceed $1,240,000. On September 23, 2026, the GHMPO issued a call for projects to agencies in its jurisdiction for supplemental applications. Funds are available to award among four different transportation modals: bicycle and pedestrian, intersections, roadway, and transit. The GHMPO has a supplemental call each year for local government to request additional project funding. The funding requires a minimum 20 percent match. Staff requests approval of the Resolution supporting the two supplemental grant applications to the GHMPO.

RESOLUTION NO. 26-60

RESOLUTION AUTHORIZING SUPPLEMENTAL APPLICATIONS TO THE GREATER HICKORY METROPOLITAN PLANNING ORGANIZATION FOR $1,240,000 IN SURFACE TRANSPORTATION BLOCK GRANT FUNDS AND COMMITTING A $310,000 LOCAL MATCH FOR BL-0066 – SPRINGS ROAD SIDEWALK AND BL-0067 – AVIATION WALK CONNECTOR

WHEREAS, on September 23, 2026, the Greater Hickory Metropolitan Planning Organization (GHMPO) issued a supplemental call for projects to agencies within its jurisdiction for additional funding in four transportation categories: bicycle and pedestrian, intersections, roadway, and transit; and

WHEREAS, the supplemental funding requires a minimum 20 percent local match; and

WHEREAS, the City of Hickory desires to submit supplemental applications for the following projects:

BL-0066 – Springs Road Sidewalk: Additional construction and construction engineering and inspection funding is needed to connect the existing sidewalk at Sandy Ridge Road (SR-1401) to the existing sidewalk at McDonald Parkway (SR-1005). The estimated additional cost is $950,000, consisting of $760,000 in federal funding and a $190,000 local match; and

BL-0067 – Aviation Walk Connector: Additional construction funding is needed for the multi-use trail connecting the 17th Street NW Extension Multi-Use Trail to the Aviation Walk Multi-Use Trail along Clement Boulevard NW and 19th Street Lane NW. The estimated additional cost is $600,000, consisting of $480,000 in federal funding and a $120,000 local match; and

WHEREAS, the total estimated additional cost of these projects is $1,550,000, consisting of $1,240,000 in requested federal funding and a $310,000 local match.

NOW, THEREFORE, BE IT RESOLVED by the City Council of the City of Hickory that the City Manager or the City Manager's designee is authorized to submit supplemental applications to the GHMPO for Surface Transportation Block Grant funds in amounts not to exceed $760,000 for BL-0066 – Springs Road Sidewalk and $480,000 for BL-0067 – Aviation Walk Connector, for a total supplemental funding request not to exceed $1,240,000.

BE IT FURTHER RESOLVED that, upon award of the requested funds, the City commits to provide the required 20 percent local match, not to exceed $190,000 for BL-0066 and $120,000 for BL-0067, for a total additional City match not to exceed $310,000. Any additional City funding commitment shall require further City Council approval.

D. Approved a Microenterprise Grant Agreement with Elite Fitness, LLC in the Amount of $4,000.

Staff requests approval of a Microenterprise Grant Agreement with Elite Fitness, LLC in the amount of $4,000. Laura and Parker Murray applied for a Microenterprise Grant to support and enhance their new small business, Elite Fitness, LLC. Elite Fitness is a local, community-focused fitness and martial arts studio offering Brazilian Jiu-Jitsu, self-defense, and strength training. The Business Development Committee reviewed the application and recommended approval of the grant in the amount of $4,000. The grant funds will be used to purchase and install business equipment. Staff recommends Council's approval of the Microenterprise Grant Agreement with Elite Fitness, LLC.

E. Approved the Application to the North Carolina Office of State Budget and Management Helene Local Government Capital Grant in the Amount of $5,737,500 for the Henry Fork Streambank Restoration and Sewer Improvement Project.

Staff requests Council's approval to apply for up to $5,737,500 from the North Carolina Office of State Budget and Management (OSBM) Helene Local Government Capital Grant Program to support the Henry Fork Streambank Restoration and Sewer Line Improvement Project. The project will address streambank erosion and sewer infrastructure damage exacerbated by Hurricane Helene, helping protect the sewer system, prevent future overflows, and improve long-term resiliency. Grant funds would supplement existing funding sources, including a $5 million NCDEQ CWSRF-Helene award and a pending CDBG-DR application. No local match is required. Staff recommend Council's approval to apply for the grant.

F. Approved a Contract with Clayton Engineering & Design for Design and Construction Administration Services for Group Hangar W7 in the Amount of $207,400.

Staff requests approval of a contract with Clayton Engineering & Design in the amount of $207,400 for design and construction administration services for Group Hangar W7 at Hickory Regional Airport. The project includes construction of a new 12,000-square-foot group hangar with aircraft storage, office space, and restroom facilities. The hangar supports recommendations from the Airport Task Force and is expected to increase airport revenue by expanding aircraft storage capacity and attracting corporate aviation tenants. Funding will be provided through FY 2026 tax revenues and anticipated FY 2027 airport revenues. Staff recommends approval of the contract.

G. Approved Task Order Number 3 with GMC North Carolina, PLLC in the Amount of $308,000 for the Shuford Sewer Lift Station.

Staff requests Council's approval of Task Order number 3 with GMC North Carolina, PLLC in the amount of $308,000 for design services associated with the Shuford Sewer Lift Station Replacement Project. The project will consolidate the existing Shuford 1 and Shuford 2 sewer lift stations into a single replacement facility, improving reliability and reducing maintenance needs within the City's sewer collection system. The scope of work includes preliminary engineering, detailed design, permitting, and bidding services. GMC

North Carolina, PLLC, was selected as the most qualified firm through a competitive qualifications-based selection process. Staff recommend approval of Task Order Number 3.

H. Approved on First Reading Budget Revision Number 9.

ORDINANCE NO. 26-36
BUDGET REVISION NUMBER 9

BE IT ORDAINED by the Governing Board of the City of Hickory that, pursuant to N.C. General Statutes 159.15 and 159.13.2, the following revision be made to the annual budget ordinance for the fiscal year ending June 30, 2027, and for the duration of the Project Ordinance noted herein.

SECTION 1. To amend the General Fund within the FY 2026-27 Budget Ordinance, the expenditures shall be amended as follows:

FUNCTIONAL AREA	INCREASE	DECREASE
Public Safety	53,051	-
TOTAL	53,051	-

To provide funding for the above, the General Fund revenues will be amended as follows:

FUNCTIONAL AREA	INCREASE	DECREASE
Restricted Intergovernmental	48,051	-
Miscellaneous	5,000	-
TOTAL	53,051	-

SECTION 2. To amend the Airport Fund within the FY 2026-27 Budget Ordinance, the expenditures shall be amended as follows:

FUNCTIONAL AREA	INCREASE	DECREASE
Transportation	14,850	-
Other Financing Uses	207,400	-
TOTAL	222,250	-

To provide funding for the above, the Airport Fund revenues will be amended as follows:

FUNCTIONAL AREA	INCREASE	DECREASE
Miscellaneous	14,850	-
Other Financing Sources	166,917	-
Restricted Intergovernmental	40,483	-
TOTAL	222,250	-

SECTION 3. To amend the Airport Hangar W7 (#65041) Capital Project Ordinance, the expenditures shall be amended as follows:

FUNCTIONAL AREA	INCREASE	DECREASE
General Capital Projects	207,400	-
TOTAL	207,400	-

To provide funding for the above, the Airport Hangar W7 (#65041) revenues will be amended as follows:

FUNCTIONAL AREA	INCREASE	DECREASE
Other Financing Sources	207,400	-
TOTAL	207,400	-

SECTION 4. Copies of the budget revision shall be furnished to the Clerk of the Governing Board, and to the City Manager (Budget Officer) and the Finance Officer for their direction.

IX. Items Removed from Consent Agenda – None

X. Informational Items

XI. New Business

A. Public Hearings

B. Departmental Reports

1. Approved the Implementation of an All-Way Stop at the Intersection of 2nd Street NW and 8th Avenue NW – Presented by Assistant City Manager Steve Miller.

Property owners along 8th Avenue NW submitted a petition through the City's Neighborhood Traffic Calming Program requesting traffic safety improvements. Traffic Division staff reviewed the petition and determined it met all program requirements, with 35 of 47 affected property owners supporting the request. Based on the petition results and staff analysis, an all-way stop is recommended for installation at the intersection of 2nd Street NW and 8th Avenue NW. Staff recommends City Council's approval of the proposed traffic-calming measure.

City Manager Warren Wood asked Assistant City Manager Steve Miller to the podium to present Council with a request to approve implementation of an all-way stop at the intersection of 2nd Street NW and 8th Avenue NW.

Assistant City Manager Steve Miller gave a PowerPoint presentation. He discussed traffic calming petition number 431. He referred to the PowerPoint and pointed out a highlighted section of a roadway. He pointed out the location of the YMCA as a point of reference. He pointed out Highway 127, 2nd Street, 1st Street, and 4th Street. He advised there were 3 traffic signals currently on this stretch of roadway. They have one at 127, one at 2nd Street and another one at 4th Street. The petition's requested area was 8th Avenue from 4th Street Drive NW to North Center Street, and then 8th Avenue from North Center Street to 2nd Street NE, which was Highway 127. It was currently 2 lanes. It had a traffic calming petition some time ago to reduce the speed to 25. There was a sidewalk on the north side, and he had pointed out the signals on the ends there. When they collected the data it indicated that approximately 3,900 vehicles a day traveled this roadway. It was not a quiet residential street per se, but it moved some cars along. Most of the vehicles traveled at 36 miles an hour or less. Again, it was signed at 25. The peak volume times were 8:00 AM to 9:00 AM and 5:00 PM to 6:00 PM, which they see that a lot in the City. He referred to the PowerPoint and advised on the percentile speed; the slower speed was green. There was no green here. The area was kind of an orange color on this end at 127, and a red section from 4th Street that carried just north of the YMCA, and a little bit of a slowdown there. But nothing was in the green that they could see. After their traffic folks took a look at this, with this data, they came up with this result. They were requesting to implement a traffic calming measure of an all-way stop at the intersection of 8th Avenue and 2nd Street NW. The petition included 47 properties along 8th Avenue NW and along 2nd Street NW, 35 of those properties signed in favor, which represented 75% approval, that was what they need to implement a 4-way stop or something along those lines. He referred to the PowerPoint and displayed a picture of what it looked like today. The other picture would be what it was proposed to look like after. In-house staff could implement this pretty quickly. They have 3 stop signs or an all-way stop. They would have the white stop bars. There would be additionally, a red flag on the stop signs to let people know. He thought that was for 60-days, to give folks a heads up. One of the other things, the North Carolina Department of Transportation (NCDOT) went in and added some protected lefts on all four of these approaches to Highway 127. That would have some calming effect, they hoped, and it also helped to protect some of those turning movements from those folks that were making those left-hand turns all four ways there. They also were trying to put in their basket there, they have some improvements to the timing of the light that was coming there. Typically, that was going to help them be able to control that a lot better, but also that would help them with some safety and slower speed aspects as well. Those 2 items were not a part of this petition, but he just wanted to point out that those were things that have happened or were going to happen along this section of roadway. Staff recommended Council's approval of petition number 431. He asked for any questions.

Alderwoman Patton mentioned if they were going north on 127 at the intersection, there was a light there that had a bag over it that said it was not functional for a long time. Had that been taken down?

Assistant City Manager Steve Miller advised it had not been. He explained that DOT was going to do 2 protected lefts, but during DOT's study they decided to do 4 protected lefts. They have made that change there. Now as you approach 127 from 8th Avenue, or you approach 8th Avenue from 127, all 4 of your protected lefts have a protected time on them.

Alderman Wood commented there was really not an alternate for this road, so he could not imagine that there was going to be unintended consequences for any of the roads nearby. He asked if he agreed?

Assistant City Manager Steve Miller advised they were going to have to roll up to a stop, that may feel a little different, but it was probably 15 seconds of their trip through there.

Alderman Wood commented that they were not going to be able to go an alternate route to avoid the new stop. There was really not a logical alternate route.

Assistant City Manager Steve Miller advised they would have to travel 3 blocks either way and then come back to the point they want to come back to. He did not think it would bleed traffic off into the neighborhoods.

Alderman Wood commented as a part of this, if the people who installed the stop signs could look- if they were traveling west and cross 4th on 8th they were traveling west on 8th, there was a speed limit sign that was just beyond that curve. There was a curve when you start going. If they could move that to that utility pole that was closer to the intersection, he thought it was more visible because right now it was in somebody's crape myrtle tree over there. The 25 mile per hour speed limit was relatively new, and it might just be more visible there.

Assistant City Manager Steve Miller advised they would make an adjustment on the speed limit sign with their traffic folks.

Alderwoman Dula referred to the flag that would be placed on top. She asked if the stop sign would also have the flashing lights?

Assistant City Manager Steve Miller advised that it would not be lit at this time. Once it was implemented, if they start having issues with people not adhering to it, then that would be something in their tool bucket. The 2 flags on top of it was just to give you some warning for 60 days, because folks are used to traveling that roadway and they were not used to a stop sign. They could all of a sudden pop up and go, “oh, I just drove through a stop sign”. Hopefully it gives it a little more visibility to that burn-in period.

Alderman Freeman asked about the 35 of the 47 affected property owners, the ones who supported the request. He asked if there was anyone against it in that community?

Assistant City Manager Steve Miller was not sure if there were actually ones that were against it. They could check on that data. He was sure there were several folks that by not signing the petition, that may be their silent way to say they were not for it. He did not know that they had someone vocally reach out to them and say they do not want it. He did not think they had that as far as a vocal standpoint, but they could check into that.

Mayor Guess asked for any other questions for Assistant City Manager Steve Miller? He thanked Mr. Miller.

Alderman Wood moved seconded by Alderwoman Patton approval of the all-way stop at the intersection of 2nd Street NW and 8th Avenue NW. The motion carried unanimously.

2. Quarterly Financial Report – Presented by Deputy City Manager Rodney Miller

City Manager Warren Wood asked Deputy City Manager Rodney Miller to the podium to present Council with the quarterly financial report.

Deputy City Manager Rodney Miller gave a PowerPoint presentation. He joked if they did not know, this was the Miller and Miller Show, and he thanked City Clerk Debbie Miller for making sure all the sound was proper. He also thanked IT Analyst Paul Solomon because his presentation did not make it down here for some reason, and he was Johnny-on-the-spot and went upstairs and got it. He would present Council with the first quarterly report of the fiscal year, July, August, September of fiscal year 2027. He mentioned that their auditors were scheduled for their second December meeting. They would present their audit findings for last fiscal year. He thought 3 of the Councilmembers would be at an audit committee meeting next week or the week after to hear the results of the audit.

Deputy City Manager Rodney Miller presented the actual first quarter financial report. He referred to the PowerPoint and pointed out a slide of the general fund. This was their main operating fund, as he had presented to them before. For the first quarter, they would see total revenues through the first 3 months, about $18.9 million, compared to total expenditures of $22.3 million, which showed a $3.5 million deficit at this time through 3 months. The first quarter that he presents, that number was always negative. They spend typically on a month-by-month basis, typically 1/12, but he said it was not this particular quarter, and he explained why. On the revenues, their primary source of revenue was sales tax revenue, at least for the first 3 months, because their property tax revenue, the bulk of that does not come in until December and January. They run a deficit. This was why they have

fund balance and why their goal was 25% fund balance. The operating fund expenditures were there. They were spending those dollars because the revenues had not come in to support the expenditures yet through this fiscal year. They have an $83 million budget in the general fund. He referred to the PowerPoint and noted the number compared to last year. He explained that number one, the revenues were higher last year because they transferred $1.5 million in capital reserve funds to pay for the City's new ERP system, Munis, which for all intents and purposes was better than their prior HTE system. That $1.5 million revenues was obviously not in there this year. Their revenues were actually up for the first quarter, which was a good thing. Their expenditures were up too, and one of those reasons was because of what they did in the budget this year. They doubled the expenditures for street resurfacing. Hopefully they had seen the work that the Street and Traffic Department had done so far this year, and they would continue to do as they have good weather. That was part of why those expenditures were higher. As a reminder, they went from $1 million to $2 million for street resurfacing this year. The second reason, speaking of IT, they had gone ahead and purchased a significant amount of capital investment for IT, both infrastructure hardware and software this year. That was why that number, at least through the first 3 months, was higher than last year. He asked for any questions on that?

Deputy City Manager Rodney Miller discussed property tax revenue. As he mentioned before, those numbers were up. That was because their property tax base was growing. They would see on a subsequent slide of where all that was growing, but they have had significant investment on commercial, industrial, and residential, all 3 categories. Through 3 months, they had received $11 million, which was a little interesting because their budget was $42 million, so they were over 25% complete in the budget on their property tax revenues, which was a little unusual at this time of year. He mentioned they budget their tax revenues very conservatively. They do not project any growth this year. They only budget both on property tax and sales tax of what they received last year. If there was any hiccup, if there was a change to the market, obviously sales tax could fluctuate. They only budget last year's revenues. He referred to the PowerPoint slide and noted there was a little hiccup here. But for all intents and purposes, their property tax base and revenues had been growing the last 4 years.

Deputy City Manager Rodney Miller discussed sales tax, similarly, they had one dip in 2025. For the first 3 months so far this year, they were up over 6.5% in sales tax. Again, that was folks shopping, dining, visiting Hickory, and spending dollars. Those monies stay here and help support the services that the City Council and City staff provides. They have a budget of about $18.7 million. They were at 5, a little over a fourth of the way. They were ahead of budget on their sales tax revenues. No issues there.

Deputy City Manager Rodney Miller discussed their building permit activity. They would notice residential numbers really were the highest since he had been with the City. To have 235 residential building permits in the first quarter of a fiscal year was just unheard of for them, that they had seen. Keep in mind, that was not all new building. Those were improvement projects. That was building a shed. That was anything that requires a permit was in that number. That was by far definitely not new structures. Commercial had a dip from 60 to 50, but again, if they compare that to prior years, that was still a very healthy permit number for Hickory and showed that they continued to grow. The value was much more important because that then turns into property tax base. They would notice that they were almost 12% higher on residential value than they were the year before. And on the commercial value, they were almost at $70 million for the first 3 months of the fiscal year. He thought that City Manager Warren Wood had mentioned previously, for years the City had $100 million in building permit value for a year, and they would notice that they had already hit that number, residential and commercial combined, through the first 3 months. Again, they were growing as a community. He wanted to caution all of them for when they publicize these numbers of all these housing units that they were going to build. He referred to the PowerPoint slide and pointed out 2 in red that they had been talking about for 2 years now. Both those projects today were on hold. They assume they would build those at some point, but they should not say that they had 400 units being built 2 years ago when 2 years later they had not even started that project. They just need to be very careful just because they come in and get approved to build, they do not know when those projects were going to start. However, the other projects on the list were currently under construction. He mentioned in the commercial number, there was 4 projects that were actually in July, August, and September. The new Hilton Hotel, which was beside CarMax, it was under construction. The Rush Truck Center that most did not realize was in Hickory, off Fairgrove Church Road. That was a sizable project, he thought it was a $12 million project. And then they had 2 Corning projects that pulled permits this quarter, the one in Trivium and the Corning on McDonald Parkway. All 4 of those totaled about $50 million of their $69 million

commercial value. He shared with them as well, because September had already posted, US Conec had actually pulled a permit for their project off of Fairgrove Church Road. He asked for any questions on these projects or building activities?

Alderwoman Williams referred to the Red Barn development which was very close to her area. It was on hold, but it was still going to move forward?

Deputy City Manager Rodney Miller replied that was their assumption, with the infrastructure in place, his assumption was they would work that out.

Alderwoman Williams commented they already have the basic services there.

Deputy City Manager Rodney Miller commented that somebody was going to lose a lot of money if they did not move forward with that, so they would work that out eventually. They just did not know when. But the timing was the essence of his comment. Those things do not just happen overnight. It takes a while for those things to be built. Blueberry Farms was the same way. That was over there near Pastor Freeman's church. The infrastructure was all in and the roads were in. It was just a matter between developer and builder they get on the same page and start moving forward. They fully expect both those projects to move forward. It was just they do not know the timing.

Alderman Wood asked if the building permits had to be renewed after a certain amount of inactivity or a certain length?

Deputy City Manager Rodney Miller advised there was a time period. It was 12 months of activity. It could not sit still for 12 months.

Mayor Guess commented that it did not sound like either one of those were in jeopardy.

Deputy City Manager Rodney Miller commented not that they were aware of, no. In fact, they had been talking more so on the Red Barn project than the Blueberry Farms. It was their understanding on the Blueberry Farm; it was the builder and the developer. They had gotten sideways on something, but money would work that out at some point.

Alderman Freeman commented that they were looking forward for them coming.

Deputy City Manager Rodney Miller discussed the water and sewer fund. The revenues were actually above expenditures by $1.7 million. Again, this was fairly normal. They were actually higher on their revenues over expenditures compared to last year. They were about $1.2 million ahead of expenditures last year, and this year they were $1.7 million on a $44 million budget.

Deputy City Manager Rodney Miller discussed their investment report. The feds had raised rates which were not reflected on his chart, but he expected their weighted average yield to continue to go up. He thought they were planning for one more rate increase in December, and they think probably in the first quarter of next year, if inflation was still what it was, they would probably have rates go up there as well. The buzzword affordability issue folks were struggling, but on the rates at this point, this was beneficial for them because they were investing those idle funds and providing that interest income. As they could see, they were at a little over $1 million in investment income through the first 3 months of the fiscal year. Those were all eligible investments. Finance Director Kari Dunlap and her team take very good care of that and follow all general statutes. He did not see any issue except they were a little heavier in cash or money market, which probably did not hurt the last few days with the market being in more money market funds. But they would invest those, especially as they get tax revenue out to a longer term to pick up a higher yield. He asked for any other questions they might have.

Mayor Guess asked if anybody had any questions for Mr. Miller?

Alderman Wood knew they were early in the game on this, but did he anticipate any impact from the passage of the property tax levy limit?

Deputy City Manager Rodney Miller responded potentially. He commented at the County's December meeting, they were going to adopt their schedule of values for this year because they were in a revaluation year and that would be effective after January 1st the values. That would be effective next fiscal year where they would decide the property tax rate based on how high or low their values go up. They were projecting an increase in values for Hickory. They just do not know exactly how much. From the State legislature side, one of the resolutions passed that the General Assembly could control the property tax rate increases. They do not know

what they had decided on that yet. They also had a changing State legislature. They were in office for another month and a half, and then another new leadership takes over. They do not know. They were staying plugged in with their Lobbyist, Sarah Prencipe, as well as the NC League of Municipalities. Finance Director Kari Dunlap just got back from a conference; he was sure they gave her an update on what they were hearing at the State level. Everyone that can was listening, and they were certainly lobbying on their behalf to take care of minimal increases so that they were not hamstrung by what the legislature can do. He thought they had been given that authority. They have the authority to go up to $1.50 per valuation. Again, they were probably not going to get reelected if they raised the rate to $1.50. But they have that authority, and that was the authority that, at least from the League of Municipalities, feels like the authority should rest with. Having the State make that change was difficult. They had also heard they think that may have been politics in play with this latest election. How many folks were going to go forward with that now that the election dust had settled? They would just see. But they were definitely in tune and following that closely.

Alderman Wood commented that it was just such a buzzword item. It did not seem there was a lot of consideration for the impact on the ground of that.

Deputy City Manager Rodney Miller gave an example, and he and City Manager Warren Wood had talked about this. If they looked at little old Maiden, North Carolina, they have had Apple, and now they were having a Microsoft data center of $300 million. Their tax base was nowhere near the City of Hickory, so they had a huge increase in tax base, and they had lowered their rate considerably. But, their community needs to decide what was best for them, not someone in Raleigh. At least that was the way he felt about it.

Alderman Wood thanked Deputy City Manager Rodney Miller for the update.

Mayor Guess asked for any other questions. He thanked Mr. Miller

3. Appointments to Boards and Commissions

COMMUNITY APPEARANCE COMMISSION
(Terms Expiring 6-30; 3-Year Terms) Appointed by City Council

Ward 2 (Williams Appoints)	VACANT

COMMUNITY RELATIONS COUNCIL
(Terms Expiring 6-30; 3-Year Terms) (Appointed by City Council)

Caucasian (Council Appoints)	VACANT
Caucasian (Council Appoints)	VACANT
Caucasian (Council Appoints)	VACANT
Other Minority (Council Appoints)	VACANT

HICKORY REGIONAL PLANNING COMMISSION
(Term Expiring 6-30; 3-Year Terms with Unlimited Appointments) (Appointed by City Council)

Burke County Representative (Mayor Appoints with Recommendation from Burke County)	VACANT

LIBRARY ADVISORY BOARD
(Terms Expiring 6-30; 3-Year Terms) (Appointed by City Council)

Ward 4 (Freeman Appoints)	VACANT
At-Large (1) (Mayor Appoints)	VACANT
At-Large (2) (Mayor Appoints)	VACANT

PUBLIC ART COMMISSION
(Terms Expiring 6-30; 3-Year Terms) (Appointed by City Council)

Ward 4 (Freeman Appoints) (Wes Christopher resigned 10-13-26)	VACANT

RECYCLING ADVISORY BOARD
(Terms Expiring 6-30; 3-Year Terms) (Appointed by City Council)

Ward 4 (Freeman Appoints)	VACANT
Ward 6 (Patton Appoints)	VACANT
At-Large (Council Appoints)	VACANT
At-Large (Council Appoints)	VACANT

YOUTH COUNCIL
(Terms Expiring 6-30; 1-Year Terms) (Appointed by City Council)

Homeschool	VACANT
St. Stephens High School	VACANT

C. Presentation of Petitions and Requests

XII. Matters Not on Agenda (requires majority vote of Council to consider)

XIII. General Comments by Members of Council, City Manager or City Attorney of a Non-Business Nature

Mayor Guess mentioned that he was sure some of them in the audience had heard, maybe some of them had not, but if they had not he was very proud that their Hickory Police Department, (their Chief and staff was present this evening), they were the first agency in North Carolina to achieve accreditation with the North Carolina Public Safety Communications Accreditation Program. He thought they were the only agency in the State now that had both.

Chief of Police Bryan Adams advised that was correct.

Mayor Guess commented that was a huge accomplishment. They certainly wanted to congratulate them and thank them. That meant a lot to the community, not just now but for the future. It was 3 more years before they had to reevaluate. He certainly wanted to commend them on that. He knew it was quite the undertaking, and to be the first agency in North Carolina to achieve that, that spoke very well of the staff at the police department, not only the sworn staff, but he wanted to make sure that people understood that it affected all of their civilian employees in telecommunications as well. Congratulations and thank you for a job well done. A round of applause was given.

Alderwoman Williams announced the Christmas parade. This Friday (November 20th) was their Christmas parade. The kickoff was at 5:45 pm. It should be fun.

Mayor Guess commented that once again their staff puts that together and coordinates it all, and it was a huge undertaking, and it always comes off without a hitch, and they always have a terrific crowd. People always ask them, “well, why do you all do it before Thanksgiving?”. They kick off the season, and it was always a tremendous success, and it gives everybody a time to do their stuff after they kick it off.

City Manager Warren Wood mentioned that Kyle Mishler with Parks and Recreation put a lot into that. He looks forward to Christmas coming every year.

Mayor Guess asked City Manager Warren Wood if they were going to let him do jokes this year?

City Manager Warren Wood advised no, he had retired.

Mayor Guess commented that was good news. Somebody else would be doing the jokes.

Alderman Seaver advised that Hickory High was also playing a playoff soccer game tonight. He thought if they won this one, they would be playing for the State Championship. Hickory's girls already won a State Championship.

Mayor Guess commented that was correct. Dual championship. Stay tuned for more news on that. He asked if anyone else had any comments? No other comments were made.

XIV. There being no further business, the meeting adjourned at 6:37 p.m.

_____
Mayor

_____
City Clerk

November 23, 2026

A Special Joint Meeting of the City Council of the City of Hickory, and Catawba County Board of Commissioners was held at the Hickory Metro Convention Center, Located at 1960 13th Avenue Drive SE, Hickory, North Carolina, on Monday, November 23, 2026, at 6:00 p.m., with the following members present:

	Hank Guess	
Tony Wood		
Charlotte C. Williams	Aldermen	Arnita M. Dula
Danny Seaver		Jill Patton

A quorum was present.

Also present were: City Manager Warren Wood, Deputy City Manager Rodney Miller, Assistant City Manager Yaidee Fox, Deputy City Clerk Crystal B. Mundy, and City Clerk Debbie D. Miller.

Catawba County Commissioners present were: Vice Chair Austin Allran, Robert C. Abernethy Jr., Barbara G. Beatty, and Cole Setzer who arrived at 6:11 p.m.

Also present were: Catawba County Manager Mary Furtado, Catawba County Attorney Jodi Stewart, Catawba County Clerk Dale Stiles, Catawba County Economic Development Corporation Vice President Nathan Huret, and Catawba County Economic Development Corporation President Scott Millar.

I. Welcome

II. Convene Catawba County Board of Commissioners, Confirm Quorum – Vice Chair Austin Allran

Catawba County Board of Commissioners Vice Chair Austin Allran called the meeting to order. All Commissioners were present except for Commissioner Randy Isenhower. A quorum was present. Vice Chair Allran welcomed everyone to the Hickory Metro Center for a joint meeting. The Commissioners and the Hickory City Council were going to have a presentation by the Economic Development Corporation regarding an economic development opportunity, specifically US Conec. They would be holding a public hearing to consider incentives. He welcomed everyone to the public meeting and advised that people would be given an opportunity to speak. He thanked the Sheriff's Department for serving as their sergeant at arms this evening.

III. Convene City of Hickory Council, Confirm Quorum - Mayor Hank Guess

Mayor Guess called the meeting to order. All Councilmembers were present except for Alderman Freeman. A quorum was present.

IV. US Conec, Ltd. Overview and Incentives – Catawba County Economic Development Vice President Nathan Huret.

Vice Chair Allran asked Catawba County Economic Development Vice President Nathan Huret to the podium to present an overview of the project and the incentives.

Catawba County Economic Development Vice President Nathan Huret gave a PowerPoint presentation. He thanked everyone for being present this evening. He advised tonight's public hearing was required by North Carolina law before both governing bodies could consider the proposed economic development agreements with US Conec. US Conec was founded in Hickory, had been headquartered there for more than 3 decades, and tonight the City and County were present to consider supporting the largest expansion in the company's history. He noted that he planned to be very thorough. He apologized if it took a little bit long, but he wanted to talk about the company, how it had grown here, what this project entailed, the jobs it would create, the investment that would occur in the proposed incentive, then the protections built into the incentive structure and agreements. Many people in the community may not know US Conec by name. But he guaranteed them that they used it or benefited from it, what they make every single day. US Conec designs and manufactures high-precision multi-fiber ferrules and connectors. Very engineered, very precisely manufactured components that allow fiber optic cable to connect and transmit information with no loss. They were truly found throughout the entire communication network and digital infrastructure that the country and so many of their businesses rely upon. He advised the company was founded here in 1992 as a joint venture of 3 global companies: Corning, Fujikura, and NTT Advanced Technology. Today they had more than 1,000 employees worldwide, 285 of which were based here in Hickory, and had been granted more than 150 patents. This truly was one of the most high-tech manufacturers in their community.

Catawba County Economic Development Vice President Nathan Huret gave a little history on some of their time here and their growth and how they really had evolved. Since their founding, US Conec had generally flown under the radar, already referenced, they do not know them by name. But between 2016 and 2024, US Conec added a production facility both in Hickory on Sweetwater Road and in Texas. Then 2025/2026, even earlier this year, they currently had 3 projects, separate expansions underway, some of which were completed and some of which were ongoing. For instance, if they had driven by Sweetwater Road lately, they had seen a 2-story building being constructed. It was an 80,000-square-foot building, the bottom of which would be production space and the top of which would be additional research and development space. He pointed out that was roughly from 2020 to now, without even counting some of those that were in process, that was over $50 million they had invested in the City of Hickory, Catawba County, without incentives. Recognize they have a pretty strong, significant commitment already to this community. Tonight represented something totally different in scale, by far the largest expansion in the company's history, $140 million and 200 new jobs, and when it was complete, US Conec would operate 5 major facilities in their community.

Catawba County Economic Development Vice President Nathan Huret discussed what the company was planning. US Conec would occupy a new 221,000-square-foot manufacturing building now under construction in the Fairgrove Business Park. The company would install new production equipment and fully upfit the building. The total capital investment was $140 million with completion by the end of 2030. Separate from tonight's request, he was very distinct in that, US Conec was also growing in a 40,000-square-foot spec building in Fairgrove adjacent to the building he previously mentioned, a much larger facility. They were undergoing transformation at the former Transportation Insight headquarters in downtown Hickory. He had mentioned the 2-story, 80,000-square-foot expansion already underway, and none of those were part of this request. The 221,000-square-foot building was, but those 3 other significant factors of growth were not. They were still getting the benefit of those in terms of jobs and investment. Recognize that. He pointed out one thing related to the building, both of the 40,000-square-foot building and a 221,000-square-foot building; both were originally owned by the City of Hickory. Fairgrove Business Park was a long-term investment made long ago, and in recent years was sold to private developers to build a series of speculative buildings. Honestly, he could say, in a meeting with the company from the very first day, this would not happen, they would not be having this public hearing, this discussion, in any capacity without having real estate options on the table. As they could tell, they have multiple pieces going on at the same time. The fact that there was a 221,000-square-foot spec building already under development by a different entity, that got them in the conversation. The fact that there was a 40,000-square-foot building down the road- again, all of these parts were needed to get it to this point. Visually, he knew many people did not go to the back of the Fairgrove Business Park, like they often do. He referred to the PowerPoint and displayed photos. He pointed out the photo of the main site. It was already under construction. This was under construction already preceding this by a group out of St. Louis, Missouri. To give them a reference point, he noted FedEx had multiple terminals here, Amity Lane was on the end, and the other 40,000-square-foot spec building that he mentioned previously.

Catawba County Economic Development Vice President Nathan Huret discussed jobs and workforce. Under the proposed agreements, US Conec would commit to creating at least 200 new full-time positions in Hickory by the end of 2030. Honestly, this was very likely conservative. The company was also required to retain its existing 285 positions, and this grows on top of what already exists. All the other expansion plans he mentioned probably makes US Conec, one of the top 5 largest private employers in the City of Hickory. The 200 new positions carried an average wage of $60,000 a year, which was above the current Catawba County average wage of $56,900. Again, he believed this was conservative based on the company's existing 285 positions were paid well above the County average wage. The new roles included production technicians, engineers, quality control, maintenance, research and development. He thought there was a natural question that they often hear in his office, and he suspected they did as well: how can they ensure that these jobs go to people that already live here? That was obviously a top priority of his office as well. He referred to the PowerPoint and pointed out a mention of Catawba Optical Alliance for Talent. It was a workforce concept that his office had been developing for the fiber optic and telecommunications technology employers. A privately led consortium working alongside their schools and workforce partners on training, recruitment, and career pathways into this industry. It was still in development, and no formal commitments had been made, but the need was clear. They looked forward to working closely with US Conec and other partners- Prysmian, CommScope, and Corning, to be as an example- to develop, retain, and recruit the talent they would need, and they had been very receptive in their discussions.

Catawba County Economic Development Vice President Nathan Huret advised before he discussed the full numbers found in the Economic Development Agreement, he walked through the process of actually what this looked like. He knew one thing, the talk in the community, or just general misconceptions that he saw on Facebook or other things, he wanted to try and do his best to clarify the air here. It was really a 6-step process. It was something that they do actually all the time. They would see the latter stages were really something they do on an annual basis. The first thing was very much what they were doing here tonight, considering them looking at a contract. This was a contractually bound agreement where every requirement, every incentive dollar was spelled out in a legally binding economic development agreement. It was not an informal promise, things like that. It was contractual and legal. Second step was the company invests first. They move first. They put dollars in the ground, they build up, they hire. All those things happened before a single dollar goes out from either the City or the County. The third step was there was a new tax value. Obviously, they have a building under construction, a speculative building that had nothing in it, or potentially even the Transportation Insight Headquarters, they were going to do work there. All of those assess and increase the tax value of each of those properties. They were really looking at the difference between what was today, what would be in the future. That was the numbers they were focused on. Another thing he should mention was the tax value as it was assessed. They pay a property tax bill just like all of them do being residents here. They pay the exact same rate, City of Hickory rate, exact same rate, Catawba County rate, he referred to the rate at the top of the PowerPoint. Step 4 was an annual certification. Before any grant payment was made US Conec certifies annually that it had met its investment, jobs, and wage commitments. Step 5, as he already referenced before, was they were only looking at new tax revenue. Obviously, an existing business here, that had nothing- they were not talking about any of their existing establishments today, or even those 3 other new establishments. Again, focused on just the one. The grant returns a portion of the new property taxes just on this one expansion that was created, and only the new taxes. In effect, US Conec was funding its own incentive through the expansion itself. A reminder that all these other facilities were not subject to this. Clawbacks- if commitments were not met and maintained, grant payments may be withheld, ended, or repaid with interest. Local governments retained full enforcement rights actual through 2037. They look at this agreement that they have for the next 11 years. If anything goes wrong they have the ability to claw back. That was a long time from now, by the way.

Catawba County Economic Development Vice President Nathan Huret discussed the incentive structure that was proposed. The EDC's product scoring matrix proposed a 6-year grant after US Conec makes its 2027 investments and ongoing- of course, this was up through 2030, the first payment would come in 2029. For 6 years, US Conec would receive 75% of the new property taxes on that 221,000-square-foot building as a grant back upon payment, and the County and City would keep 25%. After year 6, the grant ends and 100% of the new property's taxes would stay with the County and City permanently. In dollar terms, the maximum incentive over the 6 years was approximately $2.2 million from the County, $2.52 million from the City. After factoring in maximum potential incentive payments over 10 years, the County was projected to net $3.04 million, and the City, $3.47 million in new revenue, or roughly about $300,000 a year on average from US Conec beyond any grantee. For just a baseline, he had US Conec would pay about $150,000 in County taxes and $172,000 in City taxes just this year. They were talking about a pretty substantial year-over-year increase, even factoring in the maximum potential incentive payment. At the end of the year, a 6-year grant period, early modeling shows the company would be paying closer to $1 million annually to the City and slightly less to the County across all 5 facilities because of the lower tax rate at the County side. At this level, they would be one of the highest taxpayers in the City of Hickory. That was $1 million in funds annually. Remember, they currently pay about $150,000 and $172,000. They were talking $1 million annually going towards City and County services. Think police, fire, infrastructure, parks. All those things that make this a quality place to live. The truth was City and County services they enjoy every day were made possible by growth like this. These investments diversified their local tax base, reduced the cost burden from citizens, and every person in this room that was a taxpayer in Catawba County or City of Hickory. By the way, they do not demand nearly as many services as, say a 500-home residential development, which would be the equivalent amount of investment here. One additional note, he pointed out on the PowerPoint slide was the State support. This was a partnership always between the State of North Carolina Department of Commerce and the City of Hickory and Catawba County. He noted the State support on the PowerPoint slide, where it was required for a local match of $1 for every $2 State dollars.

Catawba County Economic Development Vice President Nathan Huret discussed what if things do not go as they suspect. If US Conec failed to invest $140 million by the end of 2030, that was considered a default of the contract. All incentive payments made to that date were recaptured, and in essence, no further payments were made. If US Conec failed to meet or maintain its job requirements, in essence 90%, they do provide a 10% flexibility rule, they were talking 180 jobs, that was also a default. With full repayment of all incentive payments made to date, no further payments. Other defaults, the same full repayment plus interest. Failing to provide an annual certification, they do not have evidence that they had met the requirements, they have nothing to prove or disprove, so they assume they were not meeting it, so no payments were made. Failing to keep eligibility for State incentive programs, or even just obvious closing or ceasing operations in the City of Hickory, Catawba County. As he mentioned, these were not general assurances, they were specifically legal, enforceable in this contract, and the company must maintain its job and investment for at least 3 years after the final payment. As he referenced before this goes up through 2037. Before he opened for questions and obviously the public comment period, several things he wanted to leave them with. Obviously, this was an existing neighbor. They had been here since the beginning, obviously grown substantially. This was by far the largest commitment to date. Not a dollar was granted until it was earned. They must invest first, they must create jobs, and they must pay their taxes. Only then does a portion of the new taxes that the company paid themselves return to the company. These were good careers built for people already here, 200 new careers in engineering, production, operations at above-average wages alongside 285 existing jobs averaging well above their local average. And the last part, something that folks often do not know, they were a committed community partner. US Conec was recently named Catawba Valley Community College's 2026 Community Partner Award recipient. It was a longtime supporter of the North Carolina Center for Engineering Technology Innovation Camps, the Catawba Science Center, the Catawba Apprenticeship Network, Hickory Bot Battles, and HKY for Vets. They started here, they were growing here, and they were choosing to make their largest investment here. He believed supporting this growth was the right decision for the Hickory City Council and Catawba County Board of Commissioners, and he was glad to present it tonight.

V. Questions by Elected Bodies

Vice Chair Austin Allran thanked Mr. Huret for his presentation. He opened the floor for any elected official or staff to ask questions of Mr. Huret.

Alderman Wood commented that he noticed that the job maintenance target was 90% as it related to incentives. He asked what was the logic behind 90% and not 100%?

Catawba County Economic Development Vice President Nathan Huret confirmed he was referring to the job creation side. They had to retain all existing 285. They only start counting new above that. There was some natural flexibility with the economy. That was a standard inclusion in all of their economic development agreements, recognizing sometimes business may be off year to year, but on the whole, they still had to meet that. When they do that annual certification, as an example, they were monitoring that every single year. If they have any bit of question, if they feel like they were not going to meet it, they were having sit-down good conversations with those companies in that case to recognize, are they going to meet it? And if they were not, should they pull the plug on that early? Or they have had cases where they say, their contract that they expected to hit this year was actually not going to hit to the following, and then their job creation was going to go well above that. They offer some flexibility, just recognizing business conditions.

Vice Chair Austin Allran asked if there were any other questions from elected officials or staff of Mr. Huret?

No other questions were asked.

VI. Public Hearing – US Conec, Ltd

A. Catawba County Board of Commissioners
B. Hickory City Council

Catawba County Board of Commissioners Vice Chair Austin Allran advised at this time they would open the public hearing for Catawba County.

Mayor Guess explained the rules for the public hearing that would be applicable to both the Catawba County Board of Commissioners, and the Hickory City Council. He advised there was a sign-up sheet, and at this time they had 2 people who had signed up to speak at the public hearing. It was not necessary for them to sign up on the sign-up sheet to speak at the public hearing, but he would take the names in the order that the folks had signed up. Even though they had listed their name and address on the sign-up sheet, once they approached the podium, he would ask that for the record that they reiterate their name and their complete address. After they were finished with the 2 people who had signed up for public comment, he would ask if there was anyone left present in the audience that would like to address either one of these boards simultaneously. They would allow them to speak for 3 minutes per person. They asked that they adhere to that timeframe, and they would have someone who would be keeping their time. They could not transfer their time. There was no substitutions for someone who was speaking with their time limits. Scope and AV equipment-, of course, the comments would be directly related to the subject matter. They did not allow any use of audiovisual equipment during that time. Public record- everything that was presented tonight would be recorded and was part of an official public record. Their board members would follow up through the presiding officer after public comment period had been concluded and not during the public comment period. And of course, they always like to remind everyone not to have any personal attacks. They would not tolerate any type of threat, profanity, or disruptive conduct. None of that would be permitted. If they chose to act in any of those ways, they would be removed from the meeting. Those were the public hearing guidelines. He declared the public hearing open for the Hickory City Council.

Ms. Jailyn Seabrooks, 1408 Hillsborough Street, Raleigh, NC, advised she was representing North Carolina AFL-CIO. She was present to raise particular concerns about Corning. US Conec, who they had just heard of, was a whole-owned subsidiary of Corning. Since 2015, State and local governments across North Carolina had already approved more than $47 million in corporate subsidies, tax incentives, and other forms of support for Corning. Here in Catawba County alone, more than $15 million in tax incentives and free land had been approved for Corning, since 2021 by the Hickory City Council and Catawba County Commissioners. But does Corning really need our public dollars? Corning was now riding a wave of multibillion-dollar customer agreements with Meta, Amazon, and NVIDIA to fuel the AI data center buildout. And last year, Corning sent more than $1 billion back to Wall Street through share buybacks and dividends. Specifically, they urged them today to make any corporate subsidies conditional on the following: 1) real enforceable job creation and investment commitments. While these agreements often mention promises for jobs, investments, and wage floors, in North Carolina and elsewhere, there was a troubling history of companies not meeting job or investment targets and public funds not being fully recovered. According to Catawba County internal communications, they all had seen this up close and personally. Three years after approving Project Checkmate, as of the time of the correspondence provided by the County, Corning had created zero of the jobs and invested just $24 million of the $150 million they promised. Based on evidence provided by the County, it did not appear there were clawbacks related to this project. All agreements should include strong automatic clawbacks when companies fall short. 2) job quality standards that build the middle class. Public subsidies should only support good quality jobs. While average annual wages were helpful, averages could be distorted by a small number of higher paid individuals. Any agreement should require family-sustaining wages set by a union contract where present, or taking into consideration their local cost of living, quality and affordable healthcare, retirement benefits, safe working conditions, and full compliance with all labor and safety laws. In Forsyth County, after the Board of Commissioners approved a subsidy package for Corning, the average reported wage of manufacturing associates at the plant declined according to documents submitted by the company. Lastly, 3) respect for workers' freedom of association. Any company receiving public dollars should pledge to respect workers' right to form a union and not to use subsidized public funds to hire union avoidance consultants. Companies with labor law violations should not be eligible for subsidies. Workers at Corning's North Carolina plants have accused Corning of conducting an aggressive anti-union campaign. While corporations like Corning received millions of dollars in taxpayer subsidies, their schools remain underfunded.

Deputy City Clerk Crystal Mundy called 3 minutes.

Ms. Seabrooks commented, thank you, and please commit to these quality standards before spending their public money.

Mr. Michael Dean, 508 East 7th Street, Newton, NC was present to speak on behalf of the Catawba Valley Chapter of the DSA because they were concerned about the leadership of their local government and the direction it was taking them. For the past 2 decades, they had been repeatedly engaged in corporate welfare handouts to companies like Apple and Corning. The County Commissioners tout the job creation and tax revenue that these companies bring in, but they neglect to mention the fact that their tax revenue streams were drying up, and this was an unsustainable strategy for job growth. According to the 2025 annual comprehensive financial report, Catawba County received $30.9 million for the purposes of funding the American Rescue Plan Act eligible projects to address the impact of COVID. This was particularly interesting

considering that the County's net gain after expenditures was $19.2 million, and the act that gave $30.9 million was expiring in 2026. This would leave them with an $11 million deficit going forward if they continued at this rate. Thanks to NC Senate Bill 1080, their corporate tax rate was dropping to 0% by 2030, meaning that there would be less money to distribute for operational grants, which accounted for 21% of Catawba County's total revenue in 2025. According to the NC State Office of State Budget and Management, phasing out corporate tax was estimated to drop revenue by $1.8 billion by 2033. Applying the math locally, that would be a drop in $3.6 billion every year in applicable funds. NC State House Bill 1089 caps the property tax they could levy to offset this operating brand revenue income. Companies like Apple in Maiden were a $1.2 billion facility that was only taxed at $287 million. They recently had a $175 million expansion in 2025, yet there was no reevaluation on that tax. As the opening presentation detailed, they projected $3.04 million in tax revenue over 10 years. He did not believe that incentive package was going to make or break this incentive deal. They were fighting a losing battle by chasing economic growth with corporate welfare, and eventually these revenue streams would dry up, as he had already stated. They had seen Corning leave them in the past, and there was no reason to believe that any of these companies would not do the same. Particularly a subsidiary of Corning. Asking corporations to stay loyal to the people of Catawba County was not and would never be the economic driver they need to create jobs in the region. Building a public utility cooperative to replace Duke Energy and build sustainable long-term jobs was a winning strategy that could help lower electricity costs and build the middle class. Thank you.

Mayor Guess asked if there was anyone else present in the audience that would like to address this public hearing? If so, please come forward to the podium and state their name and address. No one appeared. Mayor Guess declared the public hearing closed for the City of Hickory.

Catawba County Board of Commissioners Vice Chair Austin Allran commented as there was no further comments he declared the public hearing closed for the Catawba County Board of Commissioners.

VII. Consideration and Action Steps

A. Catawba County Board of Commissioners
B. Hickory City Council

Catawba County Board of Commissioners Vice Chair Austin Allran asked if there was any questions or comments from the Commissioners? There were none.

Mayor Guess asked if there were any questions or comments from the City Council members?

Alderman Wood commented that he had spent a lot of time looking at this agreement and talking with the EDC about it. They had been kind enough to entertain all his questions, and he advised he was going to vote to approve this agreement. With that said, he would like to say something for the record. Earlier this year, Microsoft chose to void an economic development agreement with the City of Hickory, and by doing so, forego significant economic incentives. To his knowledge, that was the first time that that had happened on a project of that size. He wanted to thank them for that. More importantly, he wanted to make the point that they set an example that highly profitable companies could choose to grow in Hickory on Hickory's merits alone. He was hopeful that companies in the future would choose to follow that example.

Mayor Guess thanked Alderman Wood. He asked if anyone else from Hickory City Council had any questions or comments? No additional questions or comments were made.

Catawba County Commissioner Beatty moved that the Board adopt the economic development agreement provided to the Board and presented by Mr. Nathan Huret, between Catawba County and US Conec, Ltd., including any related Resolutions, and to authorize the Vice Chairman to execute any and all documents necessary to complete the substance of the Resolution and the underlying transactions included but limited to the economic development agreement.

Catawba County Commissioners voted. The motion carried unanimously.

Mayor Guess advised he would entertain a motion from Hickory City Council concerning the incentives that they just heard described during this public hearing.

Alderwoman Dula moved, seconded by Alderwoman Patton that Council approve the economic development agreement provided to Council and presented by Mr. Huret between the City of Hickory and US Conec, Ltd., including any related Resolutions, and to authorize the Mayor to execute any and all documents necessary to complete the substance of the Resolution and the underlying transactions, including but not limited to the economic development agreement.

Mayor Guess asked for any further discussion. Hickory City Council voted. The motion carried unanimously.

Resolution No. 26-61
Resolution Authorizing Economic Development Incentives for
US Conec Ltd.

WHEREAS, North Carolina General Statute ("N.C.G.S.") § 158-7.1 authorizes a county or city to make appropriations for economic development purposes which the county or city determines will increase the population, taxable property, agricultural industries, employment, industrial output, or business prospects of the county or city; and

WHEREAS, Catawba County ("County") and the City of Hickory ("City") desire to provide economic development incentives to US Conec Ltd. ("Company") under separate Economic Development Agreements (collectively, the "EDAs" and each individually, an "EDA"); and

WHEREAS, the Company is engaged in the manufacture of plastic components for the communications industry. The Company now desires to expand its manufacturing facilities and operations and construct new real property improvements and install or cause to be installed additional machinery, equipment, and trade fixtures at 1939 Amity Street, Newton, North Carolina 28658; and

WHEREAS, the Company requested incentives to cause a minimum investment of $140,000,000.00 for the improvement of real property and installation of capital equipment and trade fixtures by December 31, 2030, and to create and maintain a minimum of two hundred (200) new jobs by December 31, 2030. These jobs must be maintained for a minimum of three (3) years as further detailed in the EDAs with the County and the City; and

WHEREAS, the County, the City, and the Company have engaged in negotiations to induce the County and the City to enter into their respective EDAs and appropriate and expend monies for payment of certain economic development incentive grants; and

WHEREAS, the County and the City have each reached an agreement with the Company, as set forth in their respective attached EDAs, which include terms and conditions for incentive payments to the Company and further include terms and conditions for recapture of incentive payments as provided in the respective EDAs if certain minimum levels of job creation or capital investment are not met or for failure of the Company to continue operations at or adjacent to its facilities located at 1939 Amity Street, Newton, North Carolina 28658, for the term of the EDAs; and

WHEREAS, the Board of Commissioners of Catawba County and the City Council of the City of Hickory have held public hearings in compliance with N.C.G.S. § §158-7.1 and have determined that the appropriations contemplated by their respective EDAs will stimulate the local economy, increase taxable property, promote business, and result in the creation of a substantial number of jobs that pay at or above the average annual wage in Catawba County, as computed by the North Carolina Department of Commerce for the most recent period for which data is available.

NOW, THEREFORE, BE IT RESOLVED by the Board of Commissioners of Catawba County and the City Council of the City of Hickory, North Carolina, as follows:

1) The recitals set forth above are incorporated herein by reference as if fully restated.

2) The Board of Commissioners and the City Council each approves appropriating and spending from their respective general fund amounts to make incentive payments as more specifically described in their respective EDAs, conditioned on certain requirements being met, including the Company's required minimum investment and maintenance of new jobs, which will pay at or above the average annual wage in the County, as described in the applicable EDA. The EDAs have performance requirements and claw back provisions approved by their respective governing bodies sufficient to recapture incentive payments upon failure of the Company to perform and to comply with the applicable requirements of the EDAs.

3) The Board of Commissioners hereby ratifies and approves the County's EDA substantially in the form attached hereto as Exhibit A and authorizes the Chair of the Board of Commissioners to take all actions necessary to implement the actions and grants required by that agreement. The City Council hereby ratifies and approves the City's EDA substantially in the form attached hereto as Exhibit B and authorizes the Mayor to take all actions necessary to implement the actions and grants required by that agreement.

This the 23rd day of November, 2026.

(Exhibit B is on file in the City Clerk's Office and is hereby incorporated by reference and made a part of the minutes)

VIII. There being no further business, Catawba County Board of Commissioners Beatty moved to adjourn. The motion carried unanimously.

Mayor Guess moved, seconded by Alderwoman Patton to adjourn the meeting for the City of Hickory. The motion carried unanimously.

The meeting adjourned at 6:36 p.m.

_____
Mayor

_____
City Clerk

COUNCIL AGENDA MEMOS

To: City Manager's Office

From: Justin Levey

Contact Person: Justin Levey

Date: 11/11/2026

Re: Community Relations Council Fall 2026 Grant Recommendations

REQUEST

The City of Hickory CRC is hereby submitting grant recommendations for City Council approval on consent agenda for the Fall 2026 grant cycle.

BACKGROUND

As part of the CRC work plan and annual budget process, the Community Relations Council receives funds to disperse during the fiscal year through the CRC grant process. Non-profit agencies working with diverse populations in Hickory are eligible for grant funding. The grant proposal must show how the program under consideration fits into the CRC goals and mission and how the program will serve to improve human relations in the Hickory area.

ANALYSIS

For the Fall 2026 grant cycle, the CRC received 7 grant applications for projects totaling $12990 and is recommending approval of 3 grants totaling $6,000.00. A summary sheet is attached which lists the agencies, projects, costs and CRC recommendations for funding. Funds are available in the CRC budget for the recommended grant approvals.

RECOMMENDATION

The Community Relations Council recommends funding of the 3 grants listed on the attachment totaling $6,000.

BUDGET ANALYSIS:

Budgetary Action	Yes	No
Is a Budget Amendment required?	☐	X

LIST THE EXPENDITURE CODE:

Reviewed by:

Justin E. Levey — Initiating Department Head — 11/11/2026 — Date

Deputy City Attorney, T. Swanson — Date

Asst. City Manager Rodney Miller — 11/23/26 — Date

Asst. City Manager ~~R. Beasley~~ Steve Miller — 11-24-26 — Date

Finance Officer, Kari Dunlap — 11/24/26 — Date

Deputy Finance Officer — 11-24-26 — Date

Asst. City Mgr Yaidee Fox — 11/24/26 — Date

Recommended for approval and placement on _____ Council agenda (as Consent, Public Hearing, Informational, Department Report, etc).

City Manager, W. Wood

11-24-26

Date

Hickory Community Relations Council
Monday, November 9, 2026, 5:30 pm

A regular meeting of the Hickory Community Relations Council (CRC) was held on Monday, November 9, 2026, 5:30 pm, in the Training Room of the Hickory Police Department.

Fall 2026 Grants Review & Recommendation: The CRC seeks grant applications from tax-exempt organizations during the fall and spring of each fiscal year. Lt. Justin Levey, staff liaison, received seven (7) grant applications by the deadline, which members received for their review prior to the November meeting. He said the CRC's annual grants budget is $15,000 for the fall and spring cycles combined. Members discussed their budget and agreed to split it and spend $7,500 during each cycle. They reviewed each application and discussed them in detail before deciding on recommended funding.

Danielle Walters moved, seconded by Emme Oursler, to recommend awarding a fall 2026 grant, as discussed in detail by members, to three (3) of the applicants' projects, a total $6,000, recommending full funding for three (3) of the projects and no funding for the remaining four (4) projects. By a show of hands, the motion carried unanimously.

Grant applicants, project titles, funding requests, and recommended funding awards were as follows:

Hickory Community Relations Council

FALL 2026 GRANTS SUMMARY

Applicant	Project Title	Amount Requested	Amount CRC Recommended
1. Hickory Music Factory	Artist Bridge: Open Stage and Mentorship Initiative	$2,000	$2,000
2. Arts Culture Catawba	Nonprofit Training Workshop	$1,190	$0
3. Mechanical Minds, fiscally sponsored by The Hack Foundation	Mechanical Minds First Robotics Competition Team	$2,000	$2,000
4. Hickory Museum of Art	Step Afrika!	$1,800	$0
5. Council on Adolescents of Catawba County	Lunch Buddy Program	$2,000	$2,000
6. Special Guests Foundation	Hickory Community Connections Media Initiative	$2,000	$0
7. Earthsong Explorers	The Village Classroom: Food, Art & Tradition	$2,000	$0
			$6,000 TOTAL

The CRC's recommendation to fund three (3) fall 2026 grants now goes to Hickory City Council for their consideration and approval.

Following the meeting, Captain Levey will follow up with each applicant, including explaining why each application not recommended for a spring 2026 grant was denied.

COUNCIL AGENDA MEMOS

To: City Manager's Office

From: Will Hamblin, Public Utilities Director

Contact Person: Will Hamblin, Public Utilities Director

Date: December 1, 2026

Re: SW Hickory Sewer Extension – Change Order #1

REQUEST

Staff requests Council approval of Change Order #1 with Fuller & Co. Construction, LLC, in the amount of $233,160.35 for the SW Sewer Extension Project.

BACKGROUND

The Public Utilities Department identifies areas within the City of Hickory water and sewer systems annually for inspections, conditions assessment and new service area. This practice has been established so that Staff for the Public Utilities Department may evaluate portions of the System annually to determine necessary repairs and improvements in manageable portions as well as serving new customers. An evaluation of the SW corridor, south of Mountain View, has shown potential for economic development. City staff has identified these corridors with the partnership of the Catawba County EDC and are projecting the potential for growth in these areas. This project will consist of a sewer line extension and pump station to connect the existing system. This project is being funded with ARPA Funds through DWI.

The project was awarded to Fuller & Co. Construction, LLC in June of 2025 in the amount of $5,985,858.00.

ANALYSIS

Change Order #1 accounts for the as-built quantities, the over and under runs of existing line items total an increase of $233,160.35. The final completion date is being adjusted by 24 days to December 22, 2026 due to weather delays and pump station material lead time delays.

RECOMMENDATION

Staff recommends Council approval of Change Order #1 with Fuller & Co. Construction, LLC, in the amount of $233,160.35 for the SW Sewer Extension Project.

BUDGET ANALYSIS:

Budgetary Action	Yes	No
Is a Budget Amendment required?	☒	☐

LIST THE EXPENDITURE CODE:

Project# 83311 Construction

Reviewed by:

Will Hamblin Initiating Department Head	11/20/2026 Date	Asst. City Manager Yaidee Fox	11/24/26 Date
Asst. City Manager Rodney Miller	11/23/26 Date	Asst. City Manager, S. Miller	11-24-26 Date
Finance Officer, Kari Dunlap	11/24/26 Date	Deputy Finance Officer, Cameron McHargue	11-24-26 Date

Recommended for approval and placement on _____ Council agenda (as Consent, Public Hearing, Informational, Department Report, etc).

City Manager, W. Wood
11-24-26

SECTION 00 63 63
CHANGE ORDER NO.: 1

Owner:	City of Hickory, North Carolina	Owner's Project No.:	SRP-W-ARP-0271
Engineer:	W.K. Dickson & Co., LLC.	Engineer's Project No.:	20220634.00.CL
Contractor:	Fuller & Co. Construction, LLC	Contractor's Project No.:	25-25
Project:	Hickory SW Sewer Extension Project		
Contract Name:			
Date Issued:	11/20/2026	Effective Date of Change Order:	

The Contract is modified as follows upon execution of this Change Order:

Description:

This Reconciliation Change Order intended to serve as a final adjusting Change Order to reconcile the bid/contract quantities with actual complete/installed quantities for all contract items.

The project experienced a cost overrun because the original contract estimated **141 linear feet** of 12-inch restrained-joint gravity sewer pipe installed in casing, while the verified total installed quantity was **445 linear feet.** This total includes the **390 linear feet installed as part of the primary crossing,** as well as the pipe installed within the **aerial crossing.** The full installed quantity has been confirmed as accurate; however, the contract quantity was incorrect, resulting in a **$304,000.00 unit-price overrun** for this work.

Fuller & Co. Construction is offering the City of Hickory a total credit of **$71,431.** The credit reflects **$62,745** in unused costs for casing upsizing, void grouting, and excess welding, plus **$8,686** for 55 LF of casing installed under a separate project scope.

The pump control package submittal included a submersible pressure level transducer along with the necessary controls to provide primary pump control from the level transducer and backup control from float switches. This feature was not specified in the contract documents. After discussing the situation, the Owner desires to include this feature to be consistent with other pump stations in their collection system. This added a cost of $2,943.00 to the contract and is shown in WCD #1.

Additional contract time is being requested due to weather-related delays, time required to await a design change for the force main connection to the gravity manhole, and work needed to restore and correct the pump station site due to Microsoft runoff. Additional delays were also caused by existing utility conflicts encountered throughout the project, which lengthened the bores and required adjustments to the air-release valve placements.

Attachments:

Final Adjusting Change Order Tabulation, Work Change Directive #1, Work Change Directive #2, Hickory SW Sewer Credit Breakdown, Change Order #1.

Change in Contract Price	Change in Contract Times Days / Date
Original Contract Price: $ 5,985,858.00	Original Contract Times: Substantial Completion: 420 days ; 10/29/2026 Ready for final payment: 450 days ; 11/28/2026
N/A from previously approved Change Orders to No. N/A: $ N/A	**N/A** from previously approved Change Orders to No. N/A: Substantial Completion: 0 Ready for final payment: 0
Contract Price prior to this Change Order: $ 5,985,858.00	Contract Times prior to this Change Order: Substantial Completion: 420 days ; 10/29/2026 Ready for final payment: 450 days ; 11/28/2026
Increase this Change Order: $ 233,160.35	**Increase** this Change Order: Substantial Completion: 47 Ready for final payment: 24
Contract Price incorporating this Change Order: $ 6,219,018.35	Contract Times with all approved Change Orders: Substantial Completion: 467 days ; 12/15/2026 Ready for final payment: 474 days ; 12/22/2026

	Recommended by Engineer (if required)	Accepted by Contractor
By:		
Title:		
Date:		
	Authorized by Owner	Approved by Funding Agency (if applicable)
By:		
Title:		
Date:		

This instrument has been preaudited in the manner required by the Local Government Budget and Fiscal Control Act.

City of Hickory
Finance Officer

Owner:	City of Hickory	Owner's Project No.:	SRP-W-ARP-0271
Engineer:	WK Dickson & Co., Inc.	Engineer's Project No.:	20220634.00.CL
Contractor:	Fuller Construction	Contractor's Project No.:	25-25
Project:	Hickory Sw Sewer		

A	B	C	D	E	F	G	H	I	J	K
		Bid Estimate				Work Completed			Contract Change	
Bid Item No.	Description	Contract Quantity	Units	Unit Price	Contract Total Amount	Completed Quantity	Completed Value	% of Bid Quantity	Quantity	Amount
	Divison 2 - Gravity Sewer									
01 55 26-01	Traffic Control	1.00	LS	759.00	$759.00	1.00	$759.00	100.0%	0	$0.00
01 70 00-01	Final Inspection, Testing, Cleanup and Closeout	1.00	LS	22,259.00	$22,259.00	1.00	$22,259.00	100.0%	0	$0.00
01 71 13-01	Mobilization, Insurance, Permits, and Bonds	1.00	LS	88,686.00	$88,686.00	1.00	$88,686.00	100.0%	0	$0.00
31 10 00-01	Clearing	1.00	LS	96,031.00	$96,031.00	1.00	$96,031.00	100.0%	0	$0.00
31 23 16.26-01	Rock Excavation	600.00	CY	6.00	$3,600.00		$0.00	0.0%	-600	-$3,600.00
31 23 33-01	Select Backfill	500.00	CY	24.00	$12,000.00		$0.00	0.0%	-500	-$12,000.00
31 23 33-02	Foundation Stone	30.00	CY	74.00	$2,220.00		$0.00	0.0%	-30	-$2,220.00
31 25 00-01	Erosion Control	1.00	LS	5,912.00	$5,912.00	1.00	$5,912.00	100.0%	0	$0.00
32 12 16-01	Asphalt Driveway & Parking Repair	44.00	LF	112.00	$4,928.00	50.00	$5,600.00	113.6%	6	$672.00
32 92 19-01	Restoration, Seeding, and Mulching	3.00	AC	3,190.00	$9,570.00	3.00	$9,570.00	100.0%	0	$0.00
33 05 07.23-01	24" Dia Steel Casing (t=0.250"), No Carrier Pipe, Jack & Bore (In Soil)	195.00	LF	1,179.00	$229,905.00	390.00	$459,810.00	200.0%	195	$229,905.00
33 05 07.23-02	24" Dia Steel Casing (t=0.250"), No Carrier Pipe, Jack & Bore (Not In Soil)	195.00	LF	1,180.00	$230,100.00		$0.00	0.0%	-195	-$230,100.00
33 05 61-01	4' Dia Manhole	13.00	EA	4,500.00	$58,500.00	12.00	$54,000.00	92.3%	-1	-$4,500.00
33 05 61-02	4' Dia Manhole Additional Vertical Footage (>6 ft deep)	67.00	VF	269.00	$18,023.00	47.00	$12,643.00	70.1%	-20	-$5,380.00
33 05 61-03	5' Dia Manhole	1.00	EA	5,001.00	$5,001.00	1.00	$5,001.00	100.0%	0	$0.00
33 05 61-04	5' Dia Doghouse Manhole	1.00	EA	13,397.00	$13,397.00	1.00	$13,397.00	100.0%	0	$0.00
33 05 61-05	5' Dia Manhole Additional Vertical Footage (>6 ft deep)	18.00	VF	319.00	$5,742.00	17.00	$5,423.00	94.4%	-1	-$319.00
33 31 11-01	8" DIP Gravity Sewer (3-6 ft deep)	74.00	LF	201.00	$14,874.00	74.00	$14,874.00	100.0%	0	$0.00
33 31 11-02	8" DIP Gravity Sewer (6-9 ft deep)	56.00	LF	201.00	$11,256.00	56.00	$11,256.00	100.0%	0	$0.00
33 31 11-03	12" DIP Gravity Sewer (3-6 ft deep)	149.00	LF	242.00	$36,058.00	149.00	$36,058.00	100.0%	0	$0.00
33 31 11-04	12" DIP Gravity Sewer (6-9 ft deep)	110.00	LF	242.00	$26,620.00	110.00	$26,620.00	100.0%	0	$0.00
33 31 11-05	12" PVC Gravity Sewer (3-6 ft deep)	258.00	LF	370.00	$95,460.00	258.00	$95,460.00	100.0%	0	$0.00
33 31 11-06	12" PVC Gravity Sewer (6-9 ft deep)	871.00	LF	370.00	$322,270.00	871.00	$322,270.00	100.0%	0	$0.00
33 31 11-07	12" PVC Gravity Sewer (9-12 ft deep)	341.00	LF	370.00	$126,170.00	341.00	$126,170.00	100.0%	0	$0.00
33 31 11-08	12" PVC Gravity Sewer (12-15 ft deep)	408.00	LF	370.00	$150,960.00	408.00	$150,960.00	100.0%	0	$0.00
33 31 11-09	12" PVC Gravity Sewer (15-18 ft deep)	19.00	LF	370.00	$7,030.00	19.00	$7,030.00	100.0%	0	$0.00
33 31 11-10	12" PVC Gravity Sewer (18-20 ft deep)	25.00	LF	370.00	$9,250.00	25.00	$9,250.00	100.0%	0	$0.00
33 31 11-11	12" Restrained Joint DIP Gravity Sewer (Installed in Casing)	141.00	LF	1,000.00	$141,000.00	445.00	$445,000.00	315.6%	304	$304,000.00
33 31 11-12	Aerial Stream Crossing (Includes concrete piers and casing)	1.00	LS	65,738.00	$65,738.00	1.00	$65,738.00	100.0%	0	$0.00
	Divison 3 - Force Main									
01 55 26-01	Traffic Control	1.00	LS	11,739.00	$11,739.00	1.00	$11,739.00	100.0%	0	$0.00
01 70 00-01	Final Inspection, Testing, Cleanup and Closeout	1.00	LS	11,138.00	$11,138.00	1.00	$11,138.00	100.0%	0	$0.00
01 71 13-01	Mobilization, Insurance, Permits, and Bonds	1.00	LS	66,290.00	$66,290.00	1.00	$66,290.00	100.0%	0	$0.00
02 41 13.25-01	Flowable Fill Existing Force Main Abandonment	4475.00	LF	11.00	$49,225.00	4,475.00	$49,225.00	100.0%	0	$0.00
02 41 13.25-02	Existing Force Main Plug Valve Abandonment	2.00	EA	322.00	$644.00	2.00	$644.00	100.0%	0	$0.00
02 41 13.25-03	Existing Force Main Air Valve Abandonment	2.00	EA	882.00	$1,764.00	2.00	$1,764.00	100.0%	0	$0.00
31 10 00-01	Clearing	1.00	LS	108,014.00	$108,014.00	1.00	$108,014.00	100.0%	0	$0.00
31 23 16.26-01	Rock Excavation	620.00	CY	5.00	$3,100.00		$0.00	0.0%	-620	-$3,100.00
31 23 33-01	Select Backfill	450.00	CY	24.00	$10,800.00		$0.00	0.0%	-450	-$10,800.00
31 23 33-02	Foundation Stone	80.00	CY	70.00	$5,600.00		$0.00	0.0%	-80	-$5,600.00
31 25 00-01	Erosion Control	1.00	LS	6,131.00	$6,131.00	0.95	$5,824.45	95.0%	0	-$306.55
32 11 23-01	Gravel/Dirt Driveway Repair	231.00	LF	29.00	$6,699.00	297.00	$8,613.00	128.6%	66	$1,914.00
32 12 16-01	Asphalt Driveway & Parking Repair	244.00	LF	77.00	$18,788.00	80.00	$6,160.00	32.8%	-164	-$12,628.00
32 13 13-01	Concrete Pavement, Driveway, and Sidewalk Repair	16.00	SY	688.00	$11,008.00	74.25	$51,084.00	464.1%	58	$40,076.00
32 92 19-01	Restoration, Seeding, and Mulching	10.00	AC	3,190.00	$31,900.00	8.71	$27,784.90	87.1%	-1	-$4,115.10
33 05 07.13-01	8" SDR 11 HDPE by Horizontal Directional Drill	1.00	LS	333,887.00	$333,887.00	1.00	$333,887.00	100.0%	0	$0.00
33 05 07.23-01	20" Dia Steel Casing (t=0.250"), No Carrier Pipe, Jack & Bore (In Soil)	215.00	LF	1,243.00	$267,245.00	449.00	$558,107.00	208.8%	234	$290,862.00
33 05 07.23-02	20" Dia Steel Casing (t=0.250"), No Carrier Pipe, Jack & Bore (Not In Soil)	215.00	LF	1,243.00	$267,245.00		$0.00	0.0%	-215	-$267,245.00
33 31 23-01	8" PVC Force Main	10601.00	LF	79.00	$837,479.00	11,061.00	$873,819.00	104.3%	460	$36,340.00
33 31 23-02	8" DIP Force Main	2711.00	LF	130.00	$352,430.00	2,290.00	$297,700.00	84.5%	-421	-$54,730.00
33 31 23-03	8" Restrained Joint DIP Force Main	1697.00	LF	141.00	$239,277.00	1,800.00	$253,800.00	106.1%	103	$14,523.00
40 05 78.22-01	2" Combination Air/Vacuum Valve and 5' Dia. Manhole	6.00	EA	15,426.00	$92,556.00	6.00	$92,556.00	100.0%	0	$0.00
	Division 4 - Pump Station									$0.00
1	Lump Sum Bid Price for Pump Station	1.00	LS	$ 1,439,580.00	$1,439,580.00	1.00	$1,439,580.00	100.0%	0	$0.00
	Sub-Total:				$5,985,858.00		$6,287,506.35			$301,648.35
	CHANGE ORDERS									
1	Work change Directive #1		LS	$2,943.00		1	$2,943.00		1	$2,943.00
3	Overrun Credit		EA	($71,431.00)		1	-$71,431.00		1	($71,431.00)
	Sub-Total of All Change Orders						-$68,488.00			($68,488.00)
	Total of all Changes									$233,160.35

Original Contract Price:	**$5,985,858.00**
Price to be Increased from Contract Price:	**$233,160.35**
Reconciliation Contract Price:	**$6,219,018.35**

SECTION 00 63 49
WORK CHANGE DIRECTIVE NO.: 1

Owner:	City of Hickory	Owner's Project No.:	SRP-W-ARP-0271
Engineer:	W.K. Dickson & Co., LLC dba Ardurra Group North Carolina	Engineer's Project No.:	20220634.00.CL
Contractor:	Fuller & Co. Construction. LLC	Contractor's Project No.:	25-25
Project:	Hickory SW Sewer Extension		
Contract Name:	N/A		
Date Issued:	11/25/25	Effective Date of Work Change Directive:	Date of last signature

Contractor is directed to proceed promptly with the following change(s):

Description:

Add a submersible pressure level transducer in the wet well of PS-1. Including a PVC stilling well for the level transducer. See the Submersible Pressure Transducer Mounting Detail on drawing E-601-04 (Rev 1).

Additional 1" conduit for the level transducer conductor from PS-1 to the termination cabinet (TC2).

Additional 1" conduit for the level transducer conductor from TC2 to the pump control panel (PCP).

Increase the conductor sizes from Panelboard (MDP) to the pump control panel (PCP).

Two (2) additional 1" conduits for the pump motor thermal sensor and moisture sensor from P1 and P2 to the termination cabinet (TC1).

Two (2) additional 1" conduits for the pump motor thermal sensor and moisture sensor from the termination cabinet (TC1) to the pump control panel (PCP).

Attachments:

Drawing E-601-04 – Electrical One-Line Diagrams & Panel Schedule (Rev 1)

Purpose for the Work Change Directive:

The pump control package submittal included a submersible pressure level transducer along with the necessary controls to provide primary pump control from the level transducer and backup control from float switches. This feature was not specified in the contract documents. After discussing the situation, the Owner desires to include this feature to be consistent with other pump stations in their collection system.

The additional conduits for the pump motor thermal sensor and moisture sensor were added in response to the pump submitted having separate cables for these sensors rather than jacketed with the power supply cabling.

Directive to proceed promptly with the Work described herein, prior to agreeing to change in Contract Price and Contract Time, is issued due to:

☐ Non-agreement on pricing of proposed change. ☒ Necessity to proceed for schedule or other reasons.

Estimated Change in Contract Price and Contract Times (non-binding, preliminary):

Contract Price: $ N/A Not yet estimated

Contract Time: 0 Days

Basis of estimated change in Contract Price:

☒ Lump Sum ☐ Unit Price ☐ Cost of the Work ☐ Other

	Recommended by Engineer	Authorized by Owner
By:	Ryan W. Hager	Will
Title:	Project Manager	Public Utilities Director
Date:	11/25/25	11/26/25

Hickory SW Sewer Change Order No.1					
Fuller & Co. Construction, LLC					
	Item	Qty	Unit	Unit Price	Extended Price
1	Electrical Subcontractor Materials	1.0	LS	$ 1,678.00	$ 1,678.00
2	Electrical Subcontractor Labor and Overhead	1.0	LS	$ 1,265.00	$ 1,265.00
3	BLANK	1.0	LS	$ -	$ -
4	BLANK	1.0	LS	$ -	$ -
5	BLANK	1.0	LS	$ -	$ -
6	BLANK	1.0	LS	$ -	$ -
7	BLANK	1.0	LS	$ -	$ -
8	BLANK	1.0	LS	$ -	$ -
9	BLANK	1.0	LS	$ -	$ -
10	BLANK	1.0	LS	$ -	$ -
Subtotal					**$ 2,943.00**
Contingency (0%)					
Grand Total					**$ 2,943.00**
Scope					
	For additonal expansion metal to protect pump cables.				
Clarification					
	Revisions on sheets E-501-04 and E-503-04				
Accepted:	Date:				
Title:				Jarred Fuller - Business Manager	Fuller & Company Construction, LLC

SECTION 00 63 49
WORK CHANGE DIRECTIVE NO.: 2

Owner:	City of Hickory	Owner's Project No.:	SRP-W-ARP-0271
Engineer:	W.K. Dickson & Co., LLC	Engineer's Project No.:	20220634.00.CL
Contractor:	Fuller & Co. Construction, LLC	Contractor's Project No.:	25-25
Project:	Hickory SW Sewer Extension		
Contract Name:	N/A		
Date Issued:	4/22/26	Effective Date of Work Change Directive:	Last date of execution

Contractor is directed to proceed promptly with the following change(s):

Description:

Area 04 - Pump Station

Move termination cabinets to an unclassified zone due to the air gap and install appropriately rated cord connectors. Add a "cage" to protect the exposed wires.

Pump Station Address and Emergency Contact to meet City of Hickory standards. Numbers to be contrast with their background and be a minimum of 6 inches high with a minimum stroke width of 0.75 inches.

The resulting cost of the changes is $2,943.

The attached drawings are issued for construction and shall replace the current issued for construction drawings, dated 7/9/25.

Area 03 – Force Main

Fuller Construction is going to open cut instead of jack and bore the crossing of the Duke Energy driveway at 3363 Zion Church Road. Access to the Duke Energy driveway will always remain open. To provide a cost credit, Fuller will bill for 24 LF of 20" steel casing instead of the full 50' called for at the driveway crossing, resulting in a savings of $32,318. The final adjusting change order will memorialize the final quantity of steel casing paid for.

Attachments:

- (63)E-501-04 ELECTRICAL - EQUIPMENT RACK DETAILS_r1
- (65)E-503-04 ELECTRICAL - DETAILS_r1
- (56)C-501-04 PUMP STATION DETAILS
- Area 03 – Force main, Duke Energy Crossing Credit provided by Fuller & Co. Construction, LLC
- Area 04 – Pump Station, CO [Change Proposal] #1 for the electrical modifications provided by Fuller & Co. Construction, LLC
- Catawba County Building Permit

Purpose for the Work Change Directive:

Area 04 - Pump Station

Fuller's subcontractor (Brushy Mountain) received comments back for the building permit for the Pump Station. County reviewer wanted verification cables in open air before entering cabinet, page E-501-04 meeting requirements of 2020 NEC 500 and 501 for classified locations including seal offs.

The Owner wanted to keep the open cable design for maintenance. To maintain the open cable design the termination cabinets were moved to an unclassified zone. A protective "cage" was added and a note was added on the termination cabinet detail stating that the compression fitting will be a Class 1 Division 1 Cord Connector with strain relief.

Fire Division of the City of Hickory added comments to the building permit requiring the Pump Station Signage to meet the Standards. Emergency access to be provided at the gate, either with a cuttable lock and/or chain or a Knock Box or Knock Lock.

Area 03 – Force Main

Fuller Construction requested to open-cut the pipe crossing at the driveway located at 3363 Zion Church Road. This method will create a cost savings to the City of Hickory.

Directive to proceed promptly with the Work described herein, prior to agreeing to change in Contract Price and Contract Time, is issued due to:

☐ Non-agreement on pricing of proposed change. ☒ Necessity to proceed for schedule or other reasons.

Estimated Change in Contract Price and Contract Times (non-binding, preliminary):

Contract Price: $ -$ 29,375.00 decrease

Contract Time: 0 Days

Basis of estimated change in Contract Price:

☒ Lump Sum ☒ Unit Price ☐ Cost of the Work ☐ Other

	Recommended by Engineer	Authorized by Owner
By:	Joel Ewing	
Title:	Construction Manager	Public Utilities Director
Date:	4/22/26	4-22-26

Exhibit X.B

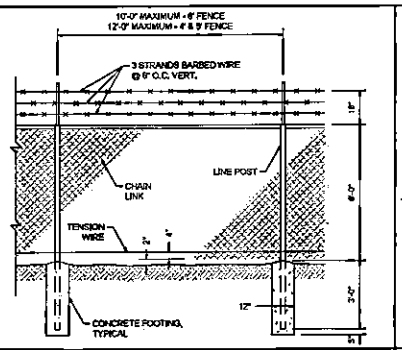

CHAIN LINK FENCE
NTS
SD002

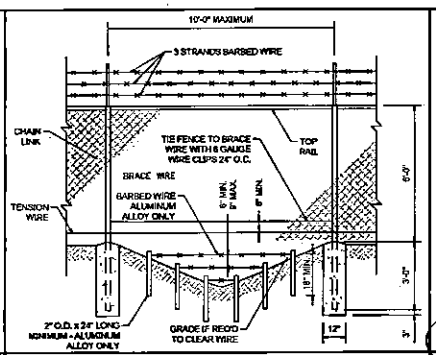

CHAIN LINK FENCE AT DITCH CROSSING
NTS
SD003

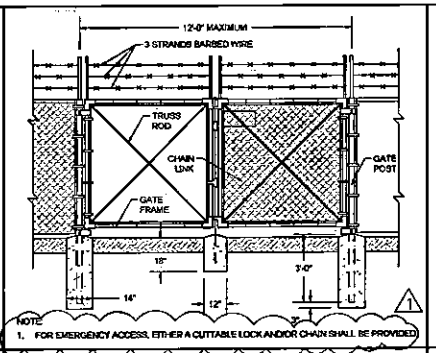

DOUBLE CHAIN LINK SWING GATE
NTS
SD004

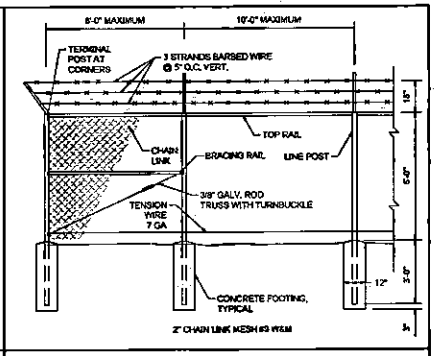

CHAIN LINK FENCE AT CORNER
NTS
SD005

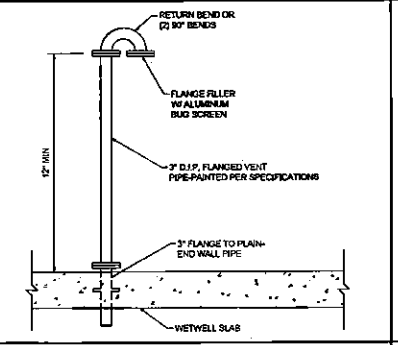

WETWELL VENT DETAIL
NTS
SP002

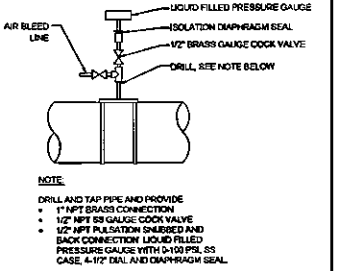

PRESSURE GAUGE
NTS
SP0010

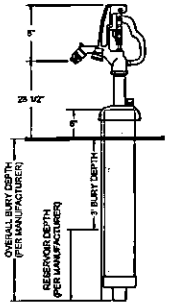

BACKFLOW PROTECTED FREEZELESS YARD HYDRANT
NTS
TP003-1

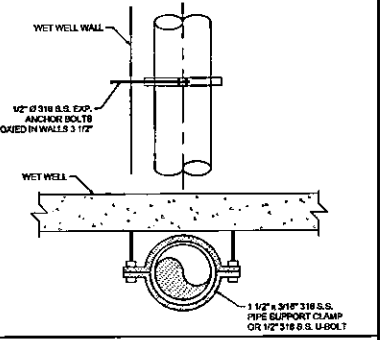

VERTICAL PIPE SUPPORT
NTS
TP015B

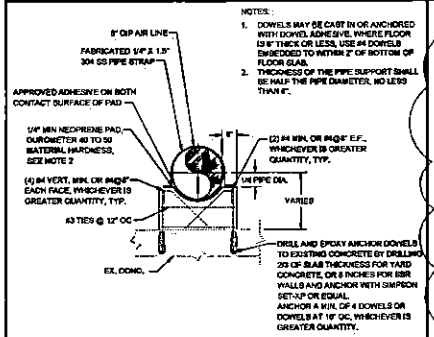

NOTES:
1. DOWELS MAY BE CAST IN OR ANCHORED WITH DOWEL ADHESIVE. WHERE FLOOR IS 6" THICK OR LESS, USE #4 DOWELS EMBEDDED TO WITHIN 2" OF BOTTOM OF FLOOR SLAB.
2. THICKNESS OF THE PIPE SUPPORT SHALL BE HALF THE PIPE DIAMETER, NO LESS THAN 6".

CONCRETE PIPE SUPPORT
NTS
002

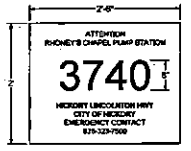

NOTES:
1. EMERGENCY SIGN SHALL BE POSTED ON THE FENCE NEAR ENTRANCE GATE AND INCLUDE EMERGENCY CONTACT NUMBER IN THE EVENT EMERGENCY RESPONSE IS REQUIRED AT THIS FACILITY. ADDRESS NUMBER SHALL BE VISIBLE FROM THE ACCESS ROAD AND BE 8 INCHES HIGH WITH A MINIMUM STROKE WIDTH OF 0.75 INCHES. ALL OTHER LETTERING SHALL BE 1 INCH HIGH.
2. SIGN SHALL BE WHITE LETTERING ON GREEN BACKGROUND.

EMERGENCY SIGN
NTS

FINAL DRAWING – RELEASED FOR CONSTRUCTION

WK DICKSON
1213 W. MOREHEAD STREET
SUITE 100
CHARLOTTE, NC 28208
(704) 334-0348
WWW.WKDICKSON.COM
NC LICENSE NO. F-0374

NORTH CAROLINA PROFESSIONAL ENGINEER SEAL 031444 RYAN W. HAGER
01/22/2026
PROFESSIONAL SEAL

REVISION RECORD

NO	DATE	DESCRIPTION
1	12/1/2025	EMERGENCY SIGN AND ACCESS

PROJECT NAME: HICKORY SW SEWER EXTENSION FOR THE CITY OF HICKORY

DRAWING TITLE: PUMP STATION DETAILS

PROJ. MGR.:	RH
DESIGN BY:	MDU/DCH
DRAWN BY:	MDI/CH
PROJ. DATE:	JULY 2025

DRAWING NUMBER:
C-501-04
WKD PROJ. NO.:
20220634.00.CL

37

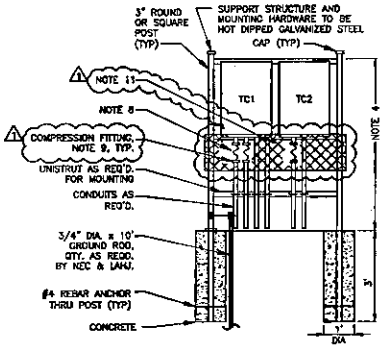

TERMINATION CABINET DETAIL
NOT TO SCALE

TERMINATION CABINET NOTES:

1. CONTRACTOR IS RESPONSIBLE FOR ROUTING ALL CONDUITS. THIS SHALL INCLUDE ALL CONDUITS INDICATED ON THE ONE-LINES, PLANS, AND PANEL SCHEDULES.
2. CONTRACTOR SHALL FIELD VERIFY EQUIPMENT LOCATIONS PRIOR TO INSTALLATION OF CABLE AND CONDUIT.
3. ALL METAL COMPONENTS THAT MAY BECOME ENERGIZED SHALL BE ELECTRICALLY BONDED PER NEC REQUIREMENTS.
4. ELECTRICAL EQUIPMENT RACK SHOULD BE ONLY AS HIGH AS REQUIRED FOR THE APPLICATION, UTILITY REQUIREMENTS, AND APPLICABLE CODES. WIDTH OF RACK TO BE DETERMINED BY EQUIPMENT SUPPLIED, NO MORE THAN 6' BETWEEN VERTICAL SUPPORTS. CONTRACTOR TO PROVIDE RACK FABRICATION DETAILS WITH EQUIPMENT SUBMITTALS.
5. ALL CORNERS AND EDGES ON EQUIPMENT RACK SHALL BE ROUNDED AND SMOOTH.
6. A HEAVY COAT OF ZINC RICH PAINT SHALL BE FIELD APPLIED TO ALL SAW CUTS, PIPE THREADS, FASTNER HARDWARE, AND DAMAGED FINISHES OF GALVANIZED MATERIALS.
7. MATERIAL NOTES, CALL-OUTS, AND DIMENSIONS SHOWN ARE TYPICAL FOR ALL ELECTRICAL EQUIPMENT RACKS.
8. PROVIDE A MINIMUM AIR GAP OF 18" WITH COMPRESSION FITTINGS ON BOTH ENDS OF CONDUIT. TYPICAL ALL CONDUITS ENTERING WETWELL
9. COMPRESSION FITTINGS SHALL BE CLASS 1 DIVISION 1 RATED CORD CONNECTOR WITH STRAIN RELIEF.
10. FLEXIBLE CORD INSTALLATION SHALL BE IN ACCORDANCE WITH NEC 501.140(B).
11. WHERE FLEXIBLE CABLE IS EXPOSED, IT SHALL BE PROTECTED FROM PHYSICAL DAMAGE WITH MESH PLATE. MESH PLATE SHALL BE STAINLESS STEEL FLATTENED EXPANDED METAL WITH 0.5" x 1.26" OPENINGS, SIZED AS REQUIRED TO COMPLETELY ENCLOSE THE FLEXIBLE CABLE TO ELIMINATE THE INFILTRATION OF DEBRIS AND RODENTS. MESH PLATE SHALL BE FULLY REMOVABLE FOR FUTURE MAINTENANCE AND BOLTED TO SUPPORT STRUCTURE AS REQUIRED.

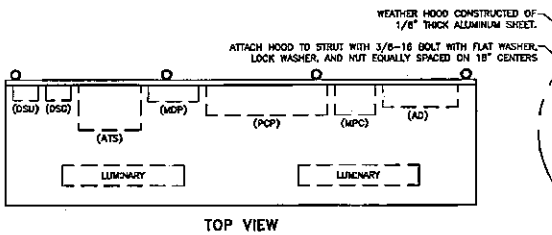

TOP VIEW

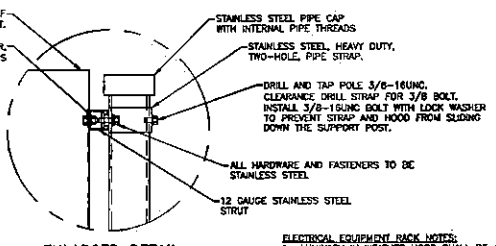

ENLARGED DETAIL

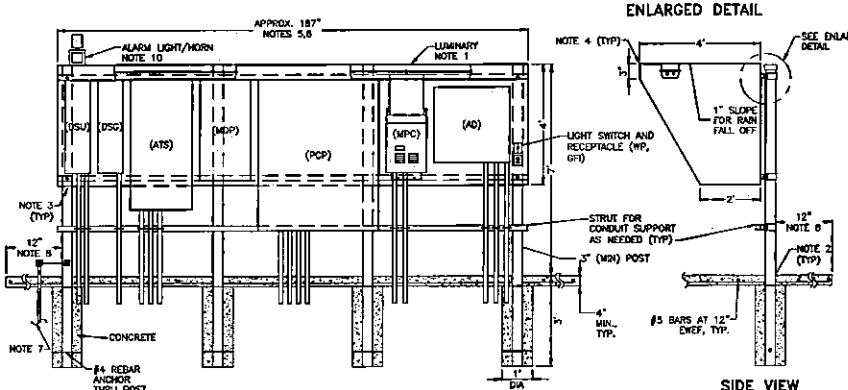

FRONT VIEW

SIDE VIEW (ELEC. ENCLOSURES NOT SHOWN)

ELECTRICAL EQUIPMENT RACK DETAIL
NOT TO SCALE

ELECTRICAL EQUIPMENT RACK NOTES:

1. LUMINARY IN WEATHER HOOD SHALL BE 4-FOOT LED MINIMUM 8000 LUMENS WITH ENCLOSED FIBERGLASS HOUSING, WET LABEL LISTED: LITHONIA FEM4LED-9L/57-IMACD, COLUMBIA HEM4-30-HL-DCA-EU, METALUX 4VT2-LD4-8-DR-UNV-L850-CD1-WL OR EQUAL.
2. CORROSION-RESISTANT COATING OF THIXOTROPIC COAL TAR PAINT SHALL BE APPLIED TO ALL CONDUITS THAT TURN OUT OF CONCRETE, MASONRY, OR EARTH. THE COATING SHALL CONSIST OF A HEAVY COAT OF COAL TAR PAINT EXTENDING SIX INCHES ON EACH SIDE OF THE POINT OF TURN-OUT.
3. ZINC RICH PAINT SHALL BE FIELD APPLIED TO ALL SAW CUTS, PIPE THREADS, FASTNER HARDWARE, AND DAMAGED FINISHES OF GALVANIZED MATERIALS.
4. ALL CORNERS AND EDGES ON WEATHER HOOD SHALL BE ROUNDED AND SMOOTH.
5. WIDTH OF RACK, HOOD, AND CONCRETE PAD TO BE DETERMINED BY EQUIPMENT SUPPLIED. CONTRACTOR TO PROVIDE HOOD FABRICATION DETAILS WITH EQUIPMENT SUBMITTALS.
6. NO MORE THAN 6' BETWEEN VERTICAL SUPPORTS.
7. 5/8" DIA. x 10' GROUND ROD, QTY. AS REQD. BY NEC & LAHJ.
8. EXTEND CONCRETE PAD 12" PAST EACH SIDE AND THE BACK OF THE RACK. EXTEND CONCRETE PAD AT LEAST 60" PAST FRONT FACE OF RACK.
9. HOOD STIFFENERS SHALL BE PROVIDED TO PREVENT FROM BENDING OR WARPING.
10. LOCATE ALARM LIGHT SO THAT IT IS VISIBLE FROM A PUBLIC ROAD.

STURGILL ENGINEERING P.A. C-1210
ONE SOUTH MAIN ST. LEXINGTON, NC 27292
(336) 238-1249 PH
(336) 236-6395 FAX

WK DICKSON
1233 W. MOREHEAD STREET
SUITE 300
CHARLOTTE, NC 28203
(870)-334-5348
WWW.WKDICKSON.COM
NC LICENSE NO.P-0974

REVISION RECORD

NO.	DESCRIPTION	DATE	BY
1	UPDATES PER PLAN REVIEW COMMENTS	07/22/2024	RWS

FINAL DESIGN - RELEASED FOR CONSTRUCTION

PROJECT NAME: HICKORY SW SEWER EXTENSION FOR THE CITY OF HICKORY

DRAWING TITLE: ELECTRICAL EQUIPMENT RACK DETAIL

PROJ. MGR.:	RWS
DESIGN BY:	RWS
DRAWN BY:	RWL
PROJ. DATE:	JULY 2024

DRAWING NUMBER: E-501-04

WKD PROJ. NO.: 20220634.00.CL

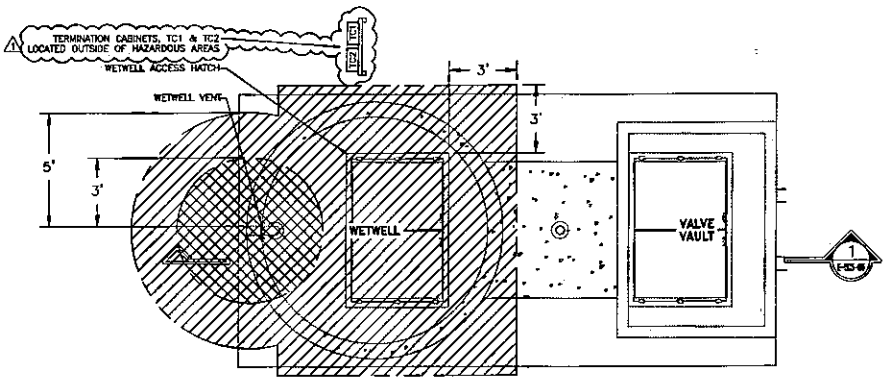

AREA CLASSIFICATION & DESIGNATION TOP PLAN
SCALE: NONE

AREA CLASSIFICATION LEGEND

CLASS I, DIVISION 1

CLASS I, DIVISION 2

HAZARDOUS AREAS:

SPACE CLASSIFIED PER NFPA-820-2020 EDITION AS FOLLOWS:

CLASS 1 DIVISION I AREAS:

1. WET WELLS
   •TABLE 4.2.2, ROW 14a
4. 3' RADIUS FROM SEWER BASIN VENT
   •ANNEX FIGURE A.4.2(b)

CLASS 1 DIVISION II AREAS:

1. ENVELOPE 3' AROUND AND 18" ABOVE ANY CLASS 1 DIVISION I OPENINGS & LEAKAGE SOURCES
   •ANNEX FIGURE A.4.2(b)
2. 5' RADIUS FROM SEWER BASIN VENT
   •ANNEX FIGURE A.4.2(b)
3. VALVE VAULT
   •TABLE 4.2.2, ROW 29a

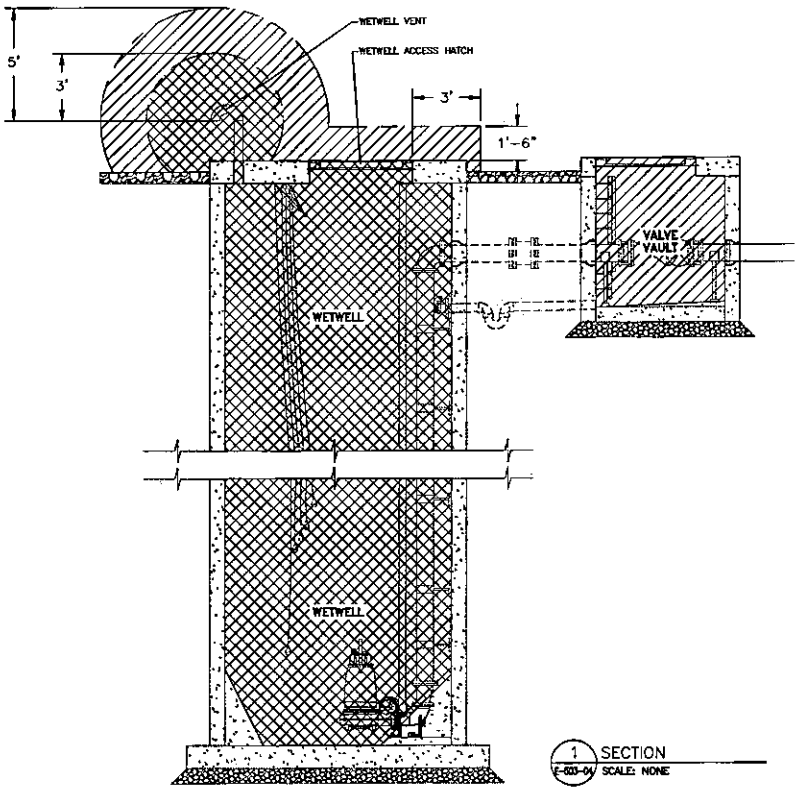

1 SECTION
E-503-04 SCALE: NONE

STURGILL ENGINEERING PA
ONE SOUTH MAIN ST.
LEXINGTON, NC 27292
(336) 238-1249 PH
(336) 236-6393 FAX
C-1210

WK DICKSON
1213 W. MOREHEAD STREET
SUITE 300
CHARLOTTE, NC 28203
(704) 334-6348
WWW.WKDICKSON.COM
NO LICENSE NO.F-0374

NORTH CAROLINA SEAL 16871 RANDALL W. STURGILL
PROFESSIONAL SEAL

REVISION RECORD

NO.	DATE	DESCRIPTION	BY
1	01/22/2024	UPDATES PER PLAN REVIEW COMMENTS	RWL

PROJECT NAME: HICKORY SW SEWER EXTENSION FOR THE CITY OF HICKORY

DRAWING TITLE: ELECTRICAL DETAILS

PROJ. MGR.: RWS
DESIGN BY: RWS
DRAWN BY: RWL
PROJ. DATE: JULY 2025
DRAWING NUMBER: E-503-04
WKD PROJ. NO.: 20220834.00.CL

FINAL DESIGN - RELEASED FOR CONSTRUCTION

Hickory SW Sewer Change Order No.1					
Fuller & Co. Construction, LLC					
	Item	Qty	Unit	Unit Price	Extended Price
1	Electrical Subcontractor Materials	1.0	LS	$ 1,678.00	$ 1,678.00
2	Electrical Subcontractor Labor and Overhead	1.0	LS	$ 1,265.00	$ 1,265.00
3	BLANK	1.0	LS	$ -	$ -
4	BLANK	1.0	LS	$ -	$ -
5	BLANK	1.0	LS	$ -	$ -
6	BLANK	1.0	LS	$ -	$ -
7	BLANK	1.0	LS	$ -	$ -
8	BLANK	1.0	LS	$ -	$ -
9	BLANK	1.0	LS	$ -	$ -
10	BLANK	1.0	LS	$ -	$ -
	Subtotal				**$ 2,943.00**
	Contingency (0%)				
	Grand Total				**$ 2,943.00**
	Scope				
	For additonal expansion metal to protect pump cables.				
	Clarification				
	Revisions on sheets E-501-04 and E-503-04				
Accepted:	Date:				
Title:				Jarred Fuller - Business Manager	Fuller & Company Construction, LLC

Duke Energy Driveway Crossing Credit

Fuller & Co. Construction, LLC

	Item	Qty	Unit	Unit Price	Extended Price
1	Credit For Open Cut Crossing At Duke Engery Driveway	26.0	LF	$ 1,243.00	$ (32,318.00)
2	BLANK	1.0	LS	$ -	$ -
3	BLANK	1.0	LS	$ -	$ -
4	BLANK	1.0	LS	$ -	$ -
5	BLANK	1.0	LS	$ -	$ -
6	BLANK	1.0	LS	$ -	$ -
7	BLANK	1.0	LS	$ -	$ -
8	BLANK	1.0	LS	$ -	$ -
9	BLANK	1.0	LS	$ -	$ -
10	BLANK	1.0	LS	$ -	$ -
	Subtotal				**$ (32,318.00)**
	Contingency (0%)				
	Grand Total				**$ (32,318.00)**

Clarifications

1	Fuller will bill for 24 LF of 20'' Steel Casing instead of the full 50' called for at the Duke Energy Crossing
2	Asphalt, rock excavation, casing and labor is included in the per foot cost of the crossing
3	Fuller will give Duke Energy 24/7 access

Accepted:	Date:		
Title:		**Jarred Fuller - Business Manager**	**Fuller & Company Construction, LLC**

County of Catawba, NC

Catawba County Building Services

25 Government Drive
Newton, NC 28658
(828) 465-8399
https://catawbacountync.gov
Approved by: Reid Goforth

PERMIT

BLDC-260413-02 — COMMERCIAL ALTERATION PERMIT

SITE ADDRESS: 3740 HICKORY LINCOLNTON HWY NEWTON
PRIMARY PARCEL: 361801084960
PROJECT NAME: REF#-000117093---HICKORY SW PUMP STATION

ISSUED: 4/13/2026
EXPIRES: 10/13/2026

APPLICANT:	Jason Beard 3390 Gaither Walker Circle Lenoir, NC 28645 8282927198	**OWNER:**	CITY OF HICKORY PO BOX 398 HICKORY, NC 28603-0398
LIEN AGENT:	No Lien Agent Required unknow UNKNOWN, UK 00000 888-960-7384		

ELECTRICAL:	ClearElectric Motor Services, Inc PO Box 2676 HICKORY, NC 28603 828-267-0829	**License:** 09585 U **Expires:** 02/15/2027
GENERAL CONTRACTOR:	Brushy Mountain Builders, Inc. 3390 Gaither Walker Circle LENOIR, NC 28645 828-228-1211	**License:** 60284 B-U, PU (water & sewer) **Expires:** 12/31/2026

PERMIT DETAILS

Please provide the plan review application number. Plan review approval is required prior to submitting an application for the permit.	REF#-000102151
Is the property intended for rent, lease, or sale?	No
Is this a site built or modular building?	Site Built
Does this project have a fire alarm system?	No
Does this project have a sprinkler / standpipe system?	No
Is public sewer available / adjacent?	Yes
Is public water available / adjacent?	Yes
Please provide a description of the scope of work.	Sewer and Pump Station-Fence
Electrical Trade	Yes
Plumbing Trade	No
Mechanical/HVAC Trade	No
Low Voltage Trade	No
Gas Piping Trade	No

County of Catawba, NC

Catawba County Building Services

25 Government Drive
Newton, NC 28658
(828) 465-8399
https://catawbacountync.gov
Approved by: Reid Goforth

Fireplace Trade	No
Ventilation Trade	No
Temporary Power Pole (a.k.a. temporary saw pole for construction use)	No
What is the contractor's estimated cost for the alterations/renovations?	1220000.00
If you require temporary electrical for this project, please indicate how many meters will be needed (if temporary electrical is not needed, enter 0)	0
Total Square Footage	0
What is the occupancy type for this facility?	U: Utility and Miscellaneous; Agricultural Buildings, Carports, Retaining Walls
If you require temporary gas for this project, please indicate how many meters will be needed (if temporary gas is not needed, enter 0)	0
Select one of the choice displayed below when asked for your Contractor Certification	see choices below
Please provide the Total Square Footage.	0
Please provide the total cost of the project. (This total project cost must include cost of all associated trades.)	1220000.00
Contractor Certification: (select your choice based on the full statements shown above before making a selection)	Choice A – General Contractor
Contractor Certification Signature:	Michael Jason Beard
In signing this form, I understand that providing any false or fraudulent information to acquire this permit is a crime pursuant to Chapter 87 of the NC General Statutes, and I may be found guilty of a Class 2 Misdemeanor and responsible for all court costs associated with my prosecution. I further understand that falsification of this document will result in the revocation of my permits.	Michael Jason Beard
I hereby certify that all information in this application is correct and all work will comply with the North Carolina State Building Codes and all other applicable state and local laws, ordinances, and regulations, as amended. I understand that a Certificate of Compliance is required prior to occupying the premises, and I will notify the Building Services Department of any changes in the approved plans and specifications for the permitted project.	Michael Jason Beard
This application becomes a permit only when validated and approved. A notification email will be sent when the permit is approved and issued.	Michael Jason Beard
By selecting "I Agree", I am signing this form electronically, and I agree that my electronic signature is the legal equivalent to my manual signature.	I Agree
Lien Agent Number [NOTE: Read conditions for "NC LIEN AGENT" under the 'Permit Submittals' section below and attach copy if required.]	N/A

CONDITIONS

* This application becomes a permit only when validated and approved. A notification will be sent when the permit is approved and issued.

* Permits expire within 6 months of the date of issuance if work has not commenced per G.S. 153A-357.

County of Catawba, NC

Catawba County Building Services

25 Government Drive
Newton, NC 28658
(828) 465-8399
https://catawbacountync.gov
Approved by: Reid Goforth

* Catawba County has a franchise agreement with Republic Services for solid waste disposal. If you need a dumpster or roll-off container for your project, you must use Republic Services.***Republic Services can be reached at 828-303-0191.***

•For projects located within the city limits of Brookford, Town of Catawba, Claremont, Conover, Hickory, Long View, Maiden, or Newton, the franchise agreement does not apply. Please contact the city where your project is located regarding requirements for solid waste disposal.

•If you own a solid waste dumpster or roll-off container and means to transport it, you may use your own equipment.

If you have issues establishing service with Republic Services, please contact the Utilities & Engineering Office at 828-465-8261.

FEES:	Paid	Due
Building - Alterations Fee	$2,955.00	$0.00
Totals :	**$2,955.00**	**$0.00**

County of Catawba, NC

Catawba County Building Services

25 Government Drive
Newton, NC 28658
(828) 465-8399
https://catawbacountync.gov
Approved by: Reid Goforth

THIS PLACARD DOES NOT CONSTITUTE A PERMIT

COMMERCIAL ALTERATION PERMIT PLACARD

BLDC-260413-02

DATE ISSUED:	04/13/2026
PROPERTY ID#:	361801084960
STREET ADDRESS:	3740 HICKORY LINCOLNTON HWY
LOT#:	
OWNER:	CITY OF HICKORY
CONTRACTOR:	ClearElectric Motor Services, Inc
LIEN AGENT:	No Lien Agent Required
LIEN ENTRY#:	N/A
PROJECT NAME:	REF#-000117093---HICKORY SW PUMP STATION
PROJECT DESCRIPTION:	I---SEWER AND PUMP STATION-FENCE
TOTAL SQ FT:	0
BUILDING CODE EDITION:	**2018 Edition - North Carolina Building Code**

Related Permits for primary subcontractors associated with this project:
Additional permits for other related work will be issued as needed (i.e. gas lines, unit heaters, etc.).
These Permits will remain inactive until an application from the subcontractor is received by the Permit Center.

Once the Permit is activated, scheduling through the online system becomes available.

This Placard shall be located on a post at the entrance of the driveway in such a position as to allow the code enforcement official to see the permit number and address of the property from the street. This Placard shall also be protected in such a way to prevent damage to it from the elements.
This Placard must be posted on the job site until Final Certificate of Occupancy has been issued or a Reinspection Fee will be assessed.

All work done must comply with the North Carolina State Building Codes and all other applicable State and local laws.

THIS PLACARD DOES NOT CONSTITUTE A PERMIT

catawba county
utilities & engineering

DUMPSTER / ROLL-OFF CONTAINER REQUIREMENTS

Catawba County has a franchise agreement with Republic Services for solid waste disposal. If you need a dumpster or roll-off container for your project, you must use Republic Services.

Republic Services can be reached at 828-303-0191.

For projects located within the city limits of Brookford, Town of Catawba, Claremont, Conover, Hickory, Long View, Maiden, or Newton, the franchise agreement does not apply. Please contact the city where your project is located regarding requirements for solid waste disposal.

If you own a solid waste dumpster or roll-off container and means to transport it, you may use your own equipment.

If you have issues establishing service with Republic Services, please contact the Utilities & Engineering Office at 828-465-8261.

Hickory SW Sewer Credit Breakdown

Fuller & Co. Construction, LLC

Bid Item	Description	Quantity (LF)	Unit Price
12	24" Dia. steel casing, jack and bore (no carrier pipe)	390	$1,179.00
29	12" restrained joint DIP gravity sewer installed in casing	390	$1,000.00
Combined		**390**	**$2,179.00**

The Bid Item 12 unit price is on the low end for a 24" jack and bore on its own. Bid Item 29 carried the rest of the crossing cost.

The major cost items carried in the price are:

- Steel casing
- 12" restrained joint DIP carrier pipe
- Gripper gaskets
- Casing spacers
- Labor to thread the carrier pipe through the casing
- Labor and materials for bulkheads
- Welding labor
- Contingency cost for upsizing the casing to 36"
- Grout materials and labor for grouting voids

Basis for the Credit

Several of the cost items in the unit price did not materialize during construction. Because these costs were not incurred, Fuller & Co. is crediting them back to the City:

1. **Casing upsize not needed.** The price carried contingency funds for upsizing the casing to 36". Field conditions did not require the upsize, so that cost was not spent.
2. **No void grouting.** No voids were found that needed grouting, so the grout materials and labor carried in the price were not used.
3. **Less welding labor.** With the casing staying at its original size, welding labor came in lower than the price assumed.

The total value of these unused items is **$62,745.00**.

Bid Item 12 Casing Credit (55 LF)

Of the 390 LF of 24" steel casing under Bid Item 12, 55 LF was installed elsewhere on the project instead of in this crossing. Fuller & Co. is crediting that footage at an adjusted rate, for a credit of **$8,686.00**, based on the following:

- **Less welding cost.** This casing required less welding than the main crossing.
- **Shallower bore.** This bore was not as deep as the 321 bore, which reduced the cost of the work.

- **Upgrades by Fuller & Co.** Fuller & Co. increased the casing wall thickness to 0.5" and installed 60 LF instead of the 55 LF called for. These upgrades are reflected in the adjusted rate.

This credit is separate from, and in addition to, the Bid Item 29 credit above.

Credit Summary

Description	Amount
Bid Items 12 + 29 contract amount (390 LF x $2,179.00/LF)	$849,810.00
Less: Bid Item 29 credit for unused cost items	($62,745.00)
Less: Bid Item 12 credit, 55 LF casing installed for other scope	($8,686.00)
Total credit to the City	**($71,431.00)**
Adjusted Bid Items 12 + 29 amount	**$778,379.00**

Fuller & Co. offers the total credit of **$71,431.00** to the City of Hickory with the understanding that liquidated damages will not be charged on this project.

BUDGET REVISION # 10

BE IT ORDAINED by the Governing Board of the City of Hickory that, pursuant to N.C. General Statutes 159.15 and 159.13.2, the following revision be made to the annual budget ordinance for the fiscal year ending June 30, 2027 and for the duration of the Project Ordinances noted herein.

SECTION 1. To amend the General Fund within the FY 2026-27 Budget Ordinance, the expenditures shall be amended as follows:

FUNCTIONAL AREA	INCREASE	DECREASE
Public Safety	74,950	
Other Financing Uses	9,400	
TOTAL	84,350	-

To provide funding for the above, the General Fund revenues will be amended as follows:

FUNCTIONAL AREA	INCREASE	DECREASE
Other Financing Sources	84,350	
TOTAL	84,350	-

SECTION 2. To amend the Water/Sewer Fund within the FY 2026-27 Budget Ordinance, the expenditures shall be amended as follows:

FUNCTIONAL AREA	INCREASE	DECREASE
Other Financing Uses	4,140	
TOTAL	4,140	-

To provide funding for the above, the Water/Sewer Fund revenues will be amended as follows:

FUNCTIONAL AREA	INCREASE	DECREASE
Other Financing Sources	4,140	
TOTAL	4,140	-

SECTION 3 To amend the NW Hickory Sewer System Eval (#83319) Capital Project Ordinance, the expenditures shall be amended as follows:

FUNCTIONAL AREA	INCREASE	DECREASE
Water & Sewer Capital Projects	4,140	
TOTAL	4,140	-

To provide funding for the above, the NW Hickory Sewer System Eval (#83319) revenues will be amended as follows:

FUNCTIONAL AREA	INCREASE	DECREASE
Other Financing Sources	4,140	
TOTAL	4,140	-

SECTION 4 Copies of the budget revision shall be furnished to the Clerk of the Governing Board, and to the City Manager (Budget Officer) and the Finance Officer for their direction.

Adopted this _____ day of _____, 2026

_____
Mayor

_____
Clerk

Resolution No. 26-_____

RESOLUTION CODIFYING THE KEY TERMS AND CONDITIONS OF WATER AND SEWER INFRASTRUCTURE ASSET TRANSFER, FUTURE WATER CAPACITY RESERVATION, AND OPERATIONS AGREEMENTS BETWEEN CATAWBA COUNTY AND THE CITY OF HICKORY

WHEREAS, the City of Hickory (the "City") and Catawba County (the "County") have entered into multiple agreements for operation, maintenance and management of the County's water distribution system ("Water System"), sanitary sewer collection system ("Sewer System") (hereinafter collectively referred to as "Systems"), water treatment plant (hereinafter "Treatment Plant"), Henry-Fork Wastewater Treatment Plant (hereinafter "H-F Wastewater Treatment Plant") and Hickory-Catawba Wastewater Treatment Plant (hereinafter "H-C Wastewater Treatment Plant");

WHEREAS, City and County are embarking on generational utility investments requiring divestment, right-sizing and expanding partnerships as appropriate;

WHEREAS, City and County have recognized the need to enter into agreements to provide for the exchange of assets; operation, maintenance, management and improvement of the Systems; sale of treated water by the City to the County; and the availability of capacity in the Treatment Plant, H-F Wastewater Treatment Plant, and H-C Wastewater Treatment Plant (the "Transaction");

WHEREAS, the transactions contemplated by this Resolution are authorized under N.C. Gen. Stat. § 160A-274, which permits governmental units to sell, purchase, and exchange interests in real or personal property with other governmental units, and under N.C. Gen. Stat. § 160A-461, which authorizes units of local government to enter into interlocal contracts and agreements to execute any undertaking, subject to ratification by resolution of the governing board of each unit;

WHEREAS, the transactions are anticipated to be documented through an asset transfer agreement, a bulk water capacity purchase agreement, and an operations and maintenance agreement, together with such exhibits, schedules, certificates, assignments, instruments, and ancillary documents as may be reasonably necessary to implement the transaction (collectively, the "Transaction Documents"); and

WHEREAS, the City and the County desire to establish the principal terms and conditions upon which the parties have agreed and which will be reflected in the Transaction Documents;

NOW, THEREFORE, BE IT RESOLVED by the City Council of the City of Hickory as follows:

I. Authorization. The City authorizes the Transaction in substantial accordance with the framework, key terms, conditions, and limitations set forth below (the "Terms"):

   a. City Asset Transfer:

i. City transfers ownership of water and sewer infrastructure assets within Southeastern Catawba County and the Town of Catawba to Catawba County and retires its share of existing debt on this infrastructure.
ii. City transfers to County $1.86M paid by Claremont to Hickory for wastewater treatment plant capacity.
iii. County assumes ownership of and remaining capacity in H-C Wastewater Treatment Plant and associated lines, and of Claremont line from railroad crossing to H-C Wastewater Treatment Plant.
iv. County assumes full customer service obligations and system rate-setting authority for customers served by this infrastructure.

b. County Asset Transfer:
i. County transfers ownership of water lines / infrastructure commonly referred to as Blackburn, Banoak, Jamestown Subdivision, Mt Grove CDBG, Advent Crossroads, Blackburn Plateau and a portion of the SECC Water Supply Loop, and retires its share of existing debt on this infrastructure.
ii. City purchases lines from County for $1.25M, paid in five (5) equal annual installments of $250,000 per year.
iii. City assumes full customer service obligations and system rate-setting authority for customers served by this infrastructure.
iv. County transfers capacity in the H-F Wastewater Treatment Plant to City.

c. Treatment Plant Capacity and Bulk Water Sales
i. County maintains 1.7MGD capacity purchased in Hickory Water Treatment Plant Capacity Agreement dated June 16, 2003.
ii. City agrees to sell County 300,000 gallons of capacity at $1.50/ gallon, at County's request, by December 31, 2031.
iii. City agrees to sell County up to 1.5MGD in new or expanded water plant capacity, with purchase price determined by City based on proportional renovation and expansion costs.
iv. City agrees to extend a $2.25M credit to County towards future purchase price.
v. City agrees to sell bulk water to County and install master meters at delivery points.

d. Southeastern Catawba County Water and Sewer Operating and Maintenance Agreement
i. County agrees to contract with City for operations and maintenance of County-owned water and wastewater infrastructure for a term of five (5) years, with option for one five (5) year extension. City shall provide a $50,000 annual credit for the first five (5) year term.
ii. County agrees to fund upgrade of metering system to match Hickory's automated meter standard.

II. Integrated Transaction. Unless either party determines otherwise in writing, the Transaction Documents shall be finalized as components of an integrated transaction and shall contain coordinated terms governing their effectiveness, commencement, transition, default, termination, and expiration.

III. Performance Protections. The agreements shall include appropriate mutual provisions concerning insurance, indemnification, audit rights, compliance monitoring, corrective action, events of default, cure periods, emergency intervention, termination rights, transition assistance, and protection of County property and public records. The agreements shall contain representations, warranties, covenants, indemnities, survival provisions, remedies, and limitations appropriate to the nature and value of the Transferred Assets and the appropriate allocation of risk.

IV. Delegated Authority. Subject to this Resolution, the City Manager is authorized, for and on behalf of the City to:

a. finalize, execute, acknowledge, and deliver the Transaction Documents, except for documents conveying an interest in real property, such as deeds and easements;
b. complete and approve exhibits, schedules, asset lists, legal descriptions, service levels, performance standards, transition plans, closing statements, and other attachments;
c. make revisions determined to be necessary or advisable to complete the Transaction; and
d. take all other actions and execute all certificates, assignments, consents, notices, and ancillary instruments reasonably necessary to carry out the purposes of this Resolution.

V. Limitations on Authority. The authority granted by this Resolution does not permit the City Manager to agree to any material term that:

a. materially changes the nature or scope of the Transaction described in this Resolution;
b. transfers material assets not within the Terms;
c. materially reduces required service levels, system capacity, water quality protections, oversight rights, or continuity-of-service protections; or
d. is otherwise materially inconsistent with the key terms, conditions, and limitations established by this Resolution.

VI. Further Approval. A proposed material deviation from the limitations in this Resolution shall be presented to the City Council for approval before execution or effectiveness. The City Manager may approve nonmaterial changes, including changes necessary to correct errors, clarify language, conform cross-references, complete factual schedules, satisfy regulatory requirements, or improve the City's legal, financial, or operational position, provided that no such change materially alters the Transaction approved by the City Council.

VII. Effective Date. This Resolution is effective upon its adoption. The Transaction Documents shall become effective or close only upon satisfaction of the conditions established by this Resolution and the applicable Transaction Documents.

Adopted this _____ day of December, 2026.

CITY OF HICKORY

_____
Hank Guess, Mayor
City of Hickory City Council

ATTEST:

_____
Debbie Miller, City Clerk

[SEAL]