ADDENDUM NO. 4

NCDOT STBGDA-1143(017) PROJECT EB-5939
HICKORY RIVERWALK
CITY OF HICKORY
HICKORY, NORTH CAROLINA

BID OPENING: October 8, 2020, 2:00 pm local time

This Addendum No. 4 is issued this **30th day of September 2020** to all parties who hold a set of Bidding Documents for the project entitled "NCDOT PROJECT EB-5939 HICKORY RIVERWALK". This Addendum No. 4 becomes a part of the Contract Documents and its receipt shall be acknowledged as follows:

Bidder shall acknowledge receipt of this Addendum by writing its number and date on the Bid Form. Failure to do so may subject the bidder to disqualification.

REMINDERS

1. Bidders should refer to the McGill Associates bid line for current plan holders' lists and other pertinent information regarding the bid. The website address is www.mcgillassociates.com/bids.

PLEASE NOTE THE FOLLOWING ITEMS:

1. Updated drawings 1C-1, 2A, 2B, 2C-3, 2E, EC-1E, and X4 are attached and include the following revisions:

   - The island in the middle of the turn-around/drop-off area has been revised to a mountable, paved island. The concrete island cover is to be constructed using colored concrete and stamped as shown on drawing 2A.

   - Removal of an existing chain link fence corner has been added to 2E to aid in construction of the parking area exit drive.

2. An updated bid form is attached which has added Bid Item 43 (Generic Paving Item-Integrally Colored Stamped Concrete) for the mountable island concrete cover.

3. A Special Provision for Integrally Colored Stamped Concrete is attached to this addendum.

MATTHEW D. OETTING, PE

Engineering • Planning • Finance
1240 19th St. Lane NW
Hickory, North Carolina 28601
Firm License No. C-0549

NORTH CAROLINA PROFESSIONAL SEAL 041598 ENGINEER MATTHEW D. OETTING
9/30/2020

END OF ADDENDUM NO. 4

Project: NCDOT STBG-DA PROJECT - EB-5939 FOR THE CITY OF HICKORY RIVERWALK							DATE: 9-25-2020
BASE BID							
Line #	Item Number	Section Number	Description	Quantity	U/M	Unit Price	Amount
			Riverwalk Bridge - Structural				
1	3956000000-E	SP	TIMBER DECKING	5,356	SF		
2	8070000000-E	410	FOUNDATION EXCAVATION (BRIDGE)	181	CY		
3	8105520000-E	411	3'-0" DIA DRILLED PIERS IN SOIL	307	LF		
4	8105620000-E	411	3'-0" DIA DRILLED PIERS NOT IN SOIL	152	LF		
5	8112000000-E	411	PERMANENT STEEL CASING FOR 3'-0" DIA DRILLED PIER	459	LF		
6	8113000000-N	411	SID INSPECTIONS	8	EA		
7	8114000000-N	411	SPT TESTING	1	EA		
8	8115000000-N	411	CSL TESTING	6	EA		
9	8175000000-E	420	CLASS AA CONCRETE (BRIDGE)	272	CY		
10	8224000000-E	425	EPOXY COATED REINFORCING STEEL (BRIDGE)	66,910	LBS		
11	8280000000-E	440	STRUCTURAL STEEL - Approximately 264,574 LBS	1	LS		
12	8280000000-E	440	MAIN TENSION RODS (INCL. FITTINGS)	29,483	LBS		
13	8475000000-E	SP	PEDESTRIAN HANDRAIL SYSTEM	1,128	LF		
14	8654000000-N	SP	DISC BEARINGS	8	EA		
15	8706000000-N	SP	STRIP SEALS	40	LF		
16	8892000000-E	SP	FORM LINER	2,609	SF		
17	8892000000-E	SP	STAINING CONCRETE SURFACES	4,451	SF		
			Access Road and Parking Area - Sitework				
18	0000100000-N	800	MOBILIZATION	1	LS		
19	0000100000-N	800	CONSTRUCTION SURVEYING	1	LS		
20	0000910000-N	SP	GENERIC MISC ITEM, REMOVABLE BOLLARD	1	EA		
21	0001000000-N	200	CLEARING/GRUBBING (XXXXX ACRES)	1	LS		
22	0043000000-N	226	GRADING	1	LS		
23	0156000000-E	250	REMOVAL OF EXISTING ASPHALT PAVEMENT	2,220	SY		
24	0366000000-E	310	18" RCP PIPE, CLASS III	114	LF		
25	0366000000-E	310	15" RCP CULVERT, CLASS IV	23	LF		
26	0453000000-E	310	15" PIPE END SECTION	1	EA		
27	1121000000-E	520	AGGREGATE BASE COURSE	1,410	TON		

28	1297000000-E	607	MILLING ASPHALT PAVEMENT, 2" DEPTH	500	SY		
29	1491000000-E	610	ASPHALT CONC. BASE COURSE, TYPE B25.0C	350	TON		
30	1519000000-E	610	ASPHALT CONC. SURFACE COURSE, TYPE S9.5B	200	TON		
31	2275000000-E	1000-6	FLOWABLE FILL	10	CY		
32	2286000000-N	840	MASONRY DRAINAGE STRUCTURES	4	EA		
33	2374000000-N	840	FRAME W/GRATE & HOOD STD 840.03, TYPE E	2	EA		
34	2374100000-N	840	FRAME W/GRATE & HOOD STD 840.03, TYPE G	1	EA		
35	2396000000-N	840	FRAME WITH COVER, STANDARD 840.04	1	EA		
36	2484000000-E	SP	GENERIC DRAINAGE ITEM 2" STONE WASHED STONE AGGREGATE BLIND SWALE	72	LF		
37	2535000000-E	846	8" x 12" CONCRETE CURB	245	LF		
38	2535000000-E	846	1'-6" CONCRETE CURB & GUTTER	120	LF		
39	2549000000-E	846	2'-6" CONCRETE CURB & GUTTER	2,330	LF		
40	2591000000-E	848	4" REINFORCED CONCRETE SIDEWALK	1,150	SY		
41	2591000000-E	848	4" REINFORCED CONCRETE SIDEWALK WITH MONOLITHIC CURB	58	SY		
42	2612000000-E	848	6" REINFORCED CONCRETE DRIVEWAY	120	SY		
43	2738000000-E	SP	GENERIC PAVING ITEM - INTEGRALLY COLORED STAMPED CONCRETE	120	SY		
44	3649000000-E	876	RIP RAP CLASS B	40	TON		
45	4370000000-N	SP	GENERIC SIGNING ITEM	1	LS		
46	4810000000-E	1205	PAINT PAVEMENT MARKING LINES (4")	360	LF		
47	5709100000	1520	2" FORCE MAIN SEWER	1,000	LF		
48	6000000000-E	1605	TEMPORARY SILT FENCE	1,800	LF		
49	6036000000-E	1631	MATTING FOR EROSION CONTROL	1,230	SY		
50	6084000000-E	1615	SEEDING & MULCHING	1	LS		
51	6132000000-N	SP	GENERIC EROSION CONTROL ITEM - TEMP. ROCK SEDIMENT DAM TYPE B 1634.02	1	EA		
52	6132000000-N	SP	GENERIC EROSION CONTROL ITEM - ROCK INLET SEDIMENT TRAP TYPE C 1632.03	2	EA		
53	6132000000-N	SP	GENERIC EROSION CONTROL ITEM - ROCK PIPE INLET SEDIMENT TRAP TYPE A 1635.01	1	EA		
54	613200000-N	SP	GENERIC EROSION CONTROL ITEM - TEMP. CONSTRUCTION ENTRANCE 1607.01	1	EA		
55	6117000000-N	SP	RESPONSE FOR EROSION CONTROL	5	EA		
56	6117500000-N	SP	CONCRETE WASHOUT STRUCTURE	1	EA		
			Riverwalk - Electrical				
57	8734000000-N	SP	ELECTRICAL WORK	1	LS		
TOTAL BID PRICE							

INTEGRALLY COLORED STAMPED CONCRETE

PART 1 GENERAL

1.1 SUMMARY

A. The work shall consist of full construction of the integrally colored stamped concrete, including but not limited to: construction of test panels; furnishing and installation of NCDOT Class A concrete mix; furnishing and mixing of color admixtures; placement, curing and finishing of concrete in required patterns; associated special formwork and joint construction, 4" stone base and all other labor and materials required for completion of the construction. Work shall be as shown on the plans and as specified in this section.

B. Section includes construction of cast-in-place Portland cement concrete, constructed of special integrally colored concrete having a stamped finish pattern.

1.2 REFERENCES

B. ASTM International:
1. ASTM C 94, Standard Specifications for Ready-Mixed Concrete.
2. ASTM C 309, Standard Specification for Liquid Membrane-Forming Compounds for Curing Concrete.
3. ASTM C 494, Standard Specification for Chemical Admixtures for Concrete.
4. ASTM C 979, Standard Specification for Pigments for Integrally Colored Concrete.

C. North Carolina Department of Transportation (NCDOT):
1. "Standard Specifications for Roads and Structures", January 2018 (NCDOT Standard Specifications).

1.3 SYSTEM DESCRIPTION

A. Integrally colored stamped concrete shall be furnished for placement in areas designated on the Drawings. Integrally colored stamped concrete shall be achieved using approved color admixtures introduced into the concrete mix during production of concrete prior to delivery and placement, providing consistent color throughout the entire thickness of the concrete section and applying a stamped design pattern into the surface as part of the finishing process.

1.4 SUBMITTALS

A. Submit the following for review and approval prior to shipment of materials to the Site:
1. Concrete mix design
2. Manufacturer's product data sheets for concrete admixtures, joint fillers, joint sealants, and concrete curing aids.
3. Manufacturers' product data sheets for concrete color admixtures, and related curing compounds.
4. Proposed joint layout

B. Additional Submittals (In-Progress and at Completion):

1. Field quality control test results

1.5 QUALITY ASSURANCE

A. The Owner will provide quality control (QC) inspection and testing to determine conformance of the materials and constructed work with the Specifications.

B. Construction of concrete shall conform to the requirements of the NCDOT Standard Specifications as shown on the Drawings and as specified in this Section.

C. Test Panels for Integrally Colored Stamped Concrete:

1. After material samples are approved and prior to starting concrete paving construction, at least two test panels shall be constructed for integrally colored stamped concrete areas. Construct test panels under the observation of the Owner's representative.
2. Each test panel shall be minimum 5-foot by 5-foot dimension. For accurate color, the quantity of concrete mixed to produce the sample shall be as recommended by the coloring admixture manufacturer.
3. Construct test panels using processes and techniques intended for use on permanent work, including curing procedures. Test panels shall be produced by the workers who will perform the permanent work.
4. Retain samples of color additives used in test panels for comparison with materials used in permanent work.
5. The accepted test panels shall be used as the standard of workmanship for the Project. Test panels shall remain through completion of the Work. If not retained as part of the construction, the test panels shall be demolished and removed from the construction site when directed by the Owner's representative.

D. Preconstruction Conference:

1. A preconstruction conference with the Owner shall be held at least one week prior to commencement of the integrally colored concrete paving construction. Contractor shall have the integrally colored concrete supplier, the foreman and the entire concrete crew that will form and place the concrete in attendance at this meeting.

1.6 DELIVERY, STORAGE, AND HANDLING

A. Color admixtures shall be delivered and stored in the manufacturers' original, unopened, sealed container that legibly shows: name of manufacturer; product name; batch number; quantity; date of manufacture; manufacturer's formulation numbers; and manufacturer's directions, including warnings and special precautions. Store and handle in accordance with the manufacturer's instructions.

1.7 PROJECT CONDITIONS

A. Conform to the applicable requirements of Sections 825 and 848 of the NCDOT Standard Specifications for required weather conditions and other restrictions for concrete construction.

B. Coordinate concrete construction with site grading work and other related construction.

PART 2 PRODUCTS

2.1 SOURCE QUALITY CONTROL

A. Proposed materials shall be approved by the Owner's representative as specified prior to delivery and use in the construction.

2.2 FORMWORK

A. Conform to the requirements of Section 825 of the NCDOT Standard Specifications.

2.3 CONCRETE MATERIALS AND MIX DESIGN

B. Materials for concrete mix (including Portland cement, aggregate, admixtures and water) shall conform to the applicable requirements of Section 1000 of the NCDOT Standard Specifications. Concrete shall be NCDOT Class A, air-entrained, conforming to the mix design requirements in Table 1000-1, including the following:
   1. Concrete mix shall be proportioned such that the 28-day compressive strength of moist cured laboratory samples achieves not less than 3,000 pounds per square inch (psi).
   2. Entrained Air Content: 6.0 percent ± 1.5 percent.

2.4 COLOR ADMIXTURES

A. Colored admixtures for integrally colored concrete shall consist of concentrated pigments specially processed for mixing into concrete complying with the requirements of ASTM C 494 and ASTM C 979, and shall contain no calcium chloride. Colored admixtures shall be added to concrete mix in accordance with the admixture manufacturer's written instructions.

B. Color for designated areas shall be the Federal Standard Color #30111.

C. Acceptable Products and Manufacturers (or approved equal):
   1. CHROMIX® Admixtures for Color-Conditioned® Concrete, manufactured by L.M. Scofield Company (www.scofield.com)
   2. Color admixtures manufactured by Davis Colors (www.daviscolors.com)
   3. Color admixtures manufactured by Bomanite (www.bomanite.com)

2.5 JOINT FILLER MATERIALS

A. Conform to the requirements of Article 1028-1 of the NCDOT Standard Specifications

2.6 JOINT SEALANTS

A. Joint sealant for installation in joints in concrete (if required) shall conform to the applicable requirements of Article 1028-2 or 1028-3 of the NCDOT Standard Specifications. Provide backer rod and other accessories as recommended by the manufacturer. Sealant color shall be selected by the Owner.

2.7 CURING MATERIALS

A. Curing compound for integrally colored concrete shall be as recommended by the color admixture, comply with ASTM C 309, and shall be the same color as the admixture. It shall be suitable for application for use with integrally colored concrete on horizontal exterior construction.

2.8 STAMPING PATTERNS

A. Acceptable Products and Manufacturers (or approved equal):
1. Euclid Chemical "Flower Rock"
2. Brickform "Random Stone TM-200"
3. Butterfield Color "Fieldstone BST3000"

PART 3 EXECUTION

3.1 FIELD QUALITY CONTROL

A. No concrete for a specific pour shall be ordered for delivery to the Site until pertinent concrete mix design and specified materials are approved by the Owner's representative.

B. If determined necessary by the Owner's representative, sampling and testing for air content, slump and compressive strength shall be performed during placement of concrete in conformance in accordance with the procedures in Article 700-15 of the NCDOT Standard Specifications.

3.2 PREPARATION

A. Subgrade shall be completed in accordance with the requirements of Section 825 of the NCDOT Standard Specifications.

B. The Contractor is responsible for maintaining the completed subgrade and stone base to the required density and grade prior to and during concrete sidewalk construction. If rutting or any other damage occurs as a result of hauling operations, the Contractor shall immediately repair the subgrade.

3.3 FORMWORK CONSTRUCTION

A. Conform to the requirements of Section 825 of the NCDOT Standard Specifications.

B. Coordinate placement of joint devices with erection of concrete formwork and placement of

form accessories.

3.4 PROPORTIONING OF MIXTURES FOR INTEGRALLY COLORED CONCRETE

A. Maintain designated colors and uniformity of color. For concrete of a specified color, use the same materials and proportions throughout. Avoid changes in quantity of Portland cement per unit volume of concrete.

B. Use only one type and brand of cement from one mill, only one source and one nominal maximum size of coarse aggregate, only one source of fine aggregate, and only one placing consistency.

3.5 CONCRETE PLACEMENT AND FINISHING

A. Concrete shall be constructed on prepared subgrade at the locations and to the thickness and horizontal dimensions indicated on the Drawings.

B. Expansion and Contraction Joints:
   1. Joints shall generally be provided in the same orientation and spacing as that provided for the adjacent curb in accordance with the requirements of Article 825-10 of the NCDOT Standard Specification and the NCDOT *Roadway Standard Drawings* detail included on the Drawings, as modified below.
   2. Contraction joints shall be formed using a grooving tool rather than by saw cutting. Unless otherwise directed by the Owner's representative, joint sealant shall be provided at the top of all expansion joints.

C. Mix, place and consolidate concrete in accordance with the applicable requirements of Sections 825 and 848 of the NCDOT Standard Specifications as modified herein. Unless otherwise approved by the Owner's representative, concrete island covers shall be constructed using standard methods, which shall include: placement of concrete within fixed forms; and consolidation and finishing of the concrete by equipment operating on forms.

D. After consolidation, the surface of concrete shall be wood float finished and stamped as recommended by the stamping tool manufacturer.

E. Contraction and expansion joints shall be provided as indicated on the Drawings and in accordance with the requirements of Subsection 825-10 of the NCDOT Standard Specifications.

F. The finished surface shall conform to the lines and grades indicated on the Drawings. Unless otherwise shown, the finished surface shall have a cross slope of 1/4 inch per foot.

3.6 CURING AND PROTECTION

A. Immediately following finishing operations, cure and protect concrete in conformance with the applicable requirements of Subarticle 825-9 of the NCDOT Standard Specifications.

B. Apply approved curing compound for integrally colored concrete in accordance with the manufacturer's written instructions. Apply using tools and methods that will provide close color consistency.

C. During the curing period, protect concrete from damaging mechanical disturbances including load stresses, heavy shock, excessive vibration, and from damage caused by rain or flowing water.

3.7 CORRECTION OF DEFECTIVE WORK

A. Concrete work that does not conform to the specified requirements (including concrete compressive strength, color, and surface finish) shall be corrected by the Contractor.

B. All finished surfaces of concrete shall drain with no puddles or areas of standing water. Areas not draining shall be removed and reconstructed or otherwise repaired using procedures acceptable to the Owner's representative.

MEASUREMENT AND PAYMENT

INTEGRALLY COLORED STAMPED CONCRETE will be measured and paid for per SQUARE YARD of integrally colored sidewalk that has been completed and accepted in accordance with the plans and specifications.

Payment will be made under:

Pay Item	Unit
INTEGRALLY COLORED STAMPED CONCRETE	Square Yard

END OF SECTION

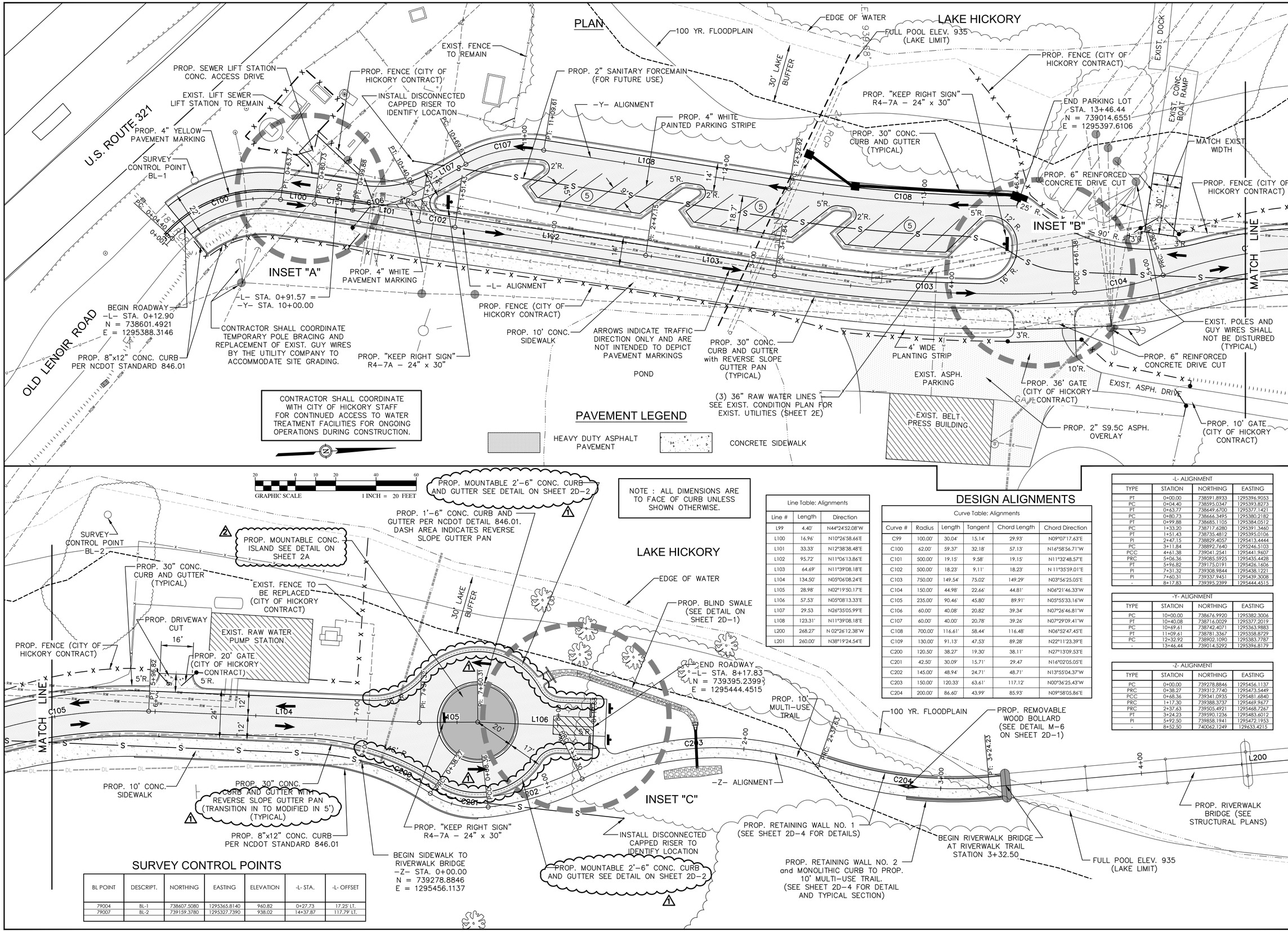

NOTE : ALL DIMENSIONS ARE TO FACE OF CURB UNLESS SHOWN OTHERWISE.

DESIGN ALIGNMENTS

Line Table: Alignments

Line #	Length	Direction
L99	4.40'	N44°24'52.08"W
L100	16.96'	N10°26'58.66"E
L101	33.33'	N12°38'38.48"E
L102	95.72'	N11°06'13.86"E
L103	64.69'	N11°39'08.18"E
L104	134.50'	N05°06'08.24"E
L105	28.98'	N02°19'50.17"E
L106	57.53'	N05°08'13.33"E
L107	29.53	N26°35'05.99"E
L108	123.31'	N11°39'08.18"E
L200	268.27'	N 02°26'12.38"W
L201	260.00'	N38°19'24.54"E

Curve Table: Alignments

Curve #	Radius	Length	Tangent	Chord Length	Chord Direction
C99	100.00'	30.04'	15.14'	29.93'	N09°07'17.63"E
C100	62.00'	59.37'	32.18'	57.13'	N16°58'56.71"W
C101	500.00'	19.15'	9.58'	19.15'	N11°32'48.57"E
C102	500.00'	18.23'	9.11'	18.23'	N 11°35'59.01"E
C103	750.00'	149.54'	75.02'	149.29'	N03°56'25.05"E
C104	150.00'	44.98'	22.66'	44.81'	N06°21'46.33"W
C105	235.00'	90.46'	45.80'	89.91'	N05°55'33.16"W
C106	60.00'	40.08'	20.82'	39.34'	N07°26'46.81"W
C107	60.00'	40.00'	20.78'	39.26'	N07°29'09.41"W
C108	700.00'	116.61'	58.44'	116.48'	N06°52'47.45"E
C109	130.00'	91.13'	47.53'	89.28'	N22°11'23.39"E
C200	120.50'	38.27'	19.30'	38.11'	N27°13'09.53"E
C201	42.50'	30.09'	15.71'	29.47	N16°02'05.05"E
C202	145.00'	48.94'	24.71'	48.71'	N13°55'04.37"W
C203	150.00'	120.33'	63.61'	117.12'	N00°36'25.43"W
C204	200.00'	86.60'	43.99'	85.93'	N09°58'05.86"E

-L- ALIGNMENT

TYPE	STATION	NORTHING	EASTING
PT	0+00.00	738591.8933	1295396.9053
PC	0+04.40	738595.0347	1295393.8273
PT	0+63.77	738649.6700	1295377.1421
PC	0+80.73	738666.3495	1295380.2182
PT	0+99.88	738685.1105	1295384.0512
PC	1+33.20	738717.6280	1295391.3460
PT	1+51.43	738735.4812	1295395.0106
PI	2+47.15	738829.4057	1295413.4444
PC	3+11.84	738892.7640	1295246.5103
PCC	4+61.38	739041.2541	1295441.9607
PRC	5+04.36	739085.5925	1295435.4428
PT	5+96.82	739175.0191	1295426.1606
PI	7+31.32	739308.9844	1295438.1221
PI	7+60.31	739337.9451	1295439.3008
-	8+17.83	739395.2399	1295444.4515

-Y- ALIGNMENT

TYPE	STATION	NORTHING	EASTING
PC	10+00.00	738676.9920	1295382.3006
PT	10+40.08	738716.0029	1295377.2019
PC	10+69.61	738742.4071	1295363.9883
PT	11+09.61	738781.3367	1295358.8729
PC	12+32.92	738902.1090	1295383.7787
-	13+46.44	739014.5292	1295396.8179

-Z- ALIGNMENT

TYPE	STATION	NORTHING	EASTING
PC	0+00.00	739278.8846	1295456.1137
PRC	0+38.27	739312.7740	1295473.5449
PCC	0+68.36	739341.0935	1295481.6840
PRC	1+17.30	739388.3737	1295469.9677
PRC	2+37.63	739505.4921	1295468.7267
PT	3+24.23	739590.1236	1295483.6012
PI	5+92.50	739858.1941	1295472.1953
-	8+52.50	740062.1249	1296633.4215

SURVEY CONTROL POINTS

BL POINT	DESCRIPT.	NORTHING	EASTING	ELEVATION	-L- STA.	-L- OFFSET
79004	BL-1	738607.5080	1295365.8140	960.82	0+27.73	17.25' LT.
79007	BL-2	739159.3780	1295327.7390	938.02	14+37.87	117.79' LT.

mcgill
1240 19th Street Lane NW
Hickory, NC 28601
828.328.2024
NC Firm License # C-0459
mcgillassociates.com

NCDOT STBG-DA PROJECT EB-5939
FOR THE CITY OF HICKORY
RIVERWALK
BURKE COUNTY, NORTH CAROLINA

NO.	DATE	BY	REVISION DESCRIPTION
2	9/24/20	MDO	ADDENDUM NO. 4
1	9/11/20	MDO	ADDENDUM NO. 2

ENTRANCE DRIVE and PARKING LOT LAYOUT PLAN

DR RLC | CHK MDO | REV
DATE: AUGUST, 2020
SHEET 1C-1

L:\Hickory\Projects\2016 PROJECTS\16.01420 HICKORY NC - Hickory Riverwalk\02_Design Phase\Drawings_Data\DrawingFiles\CURRENT PLANS\DOT CONTRACT PLANSET\16.01420_LAYOUT.dwg 9/24/2020 1:35 PM MATTHEW GETTING

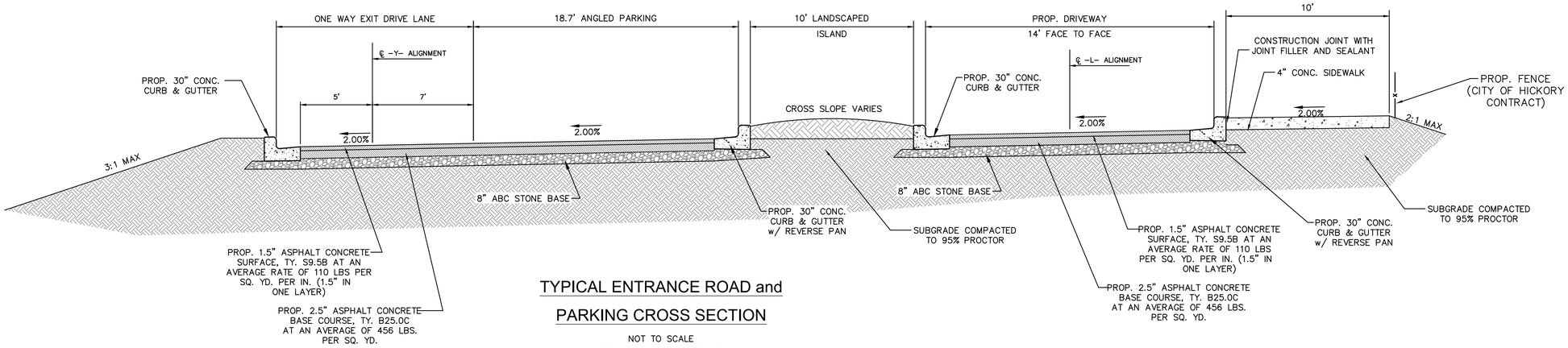

TYPICAL ENTRANCE ROAD and PARKING CROSS SECTION

NOT TO SCALE
CREATED FOR THIS PROJECT

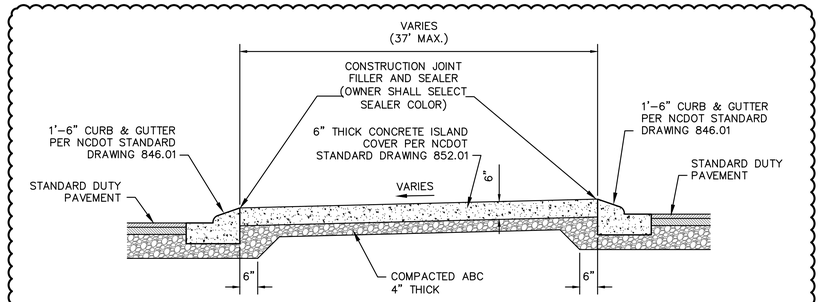

MOUNTABLE CONCRETE ISLAND

NOT TO SCALE
CREATED FOR THIS PROJECT

1. CONCRETE ISLAND COVER SHALL BE INTEGRALLY COLORED TO MATCH STAINED CONCRETE RETAINING WALLS AND PILE CAPS (FEDERAL STANDARD COLOR #30111)
2. CONCRETE ISLAND COVER SHALL BE STAMPED USING A STAMP PATTERN CONSISTING OF EUCLID CHEMICAL FLOWER ROCK, BRICKFORM RANDOM STONE TM-200, BUTTERFIELD COLOR FIELDSTONE BST3000, OR APPROVED EQUIVALENT.
3. THE CONTRACTOR SHALL PROVIDE A DRAWING SHOWING THE PROPOSED JOINT PATTERN FOR THE ENGINEER'S APPROVAL PRIOR TO COMMENCING WORK.

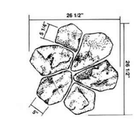

CONCRETE ISLAND COVER STAMP PATTERN

2

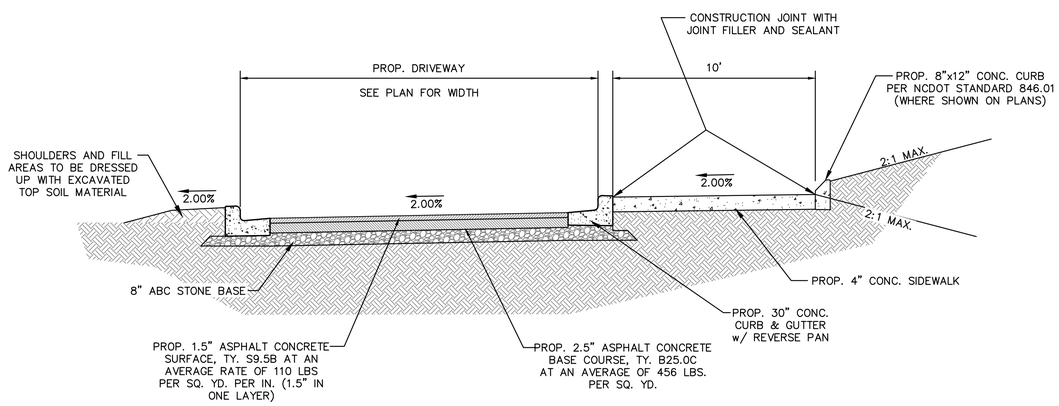

TYPICAL ENTRANCE ROAD CROSS SECTION

NOT TO SCALE
CREATED FOR THIS PROJECT

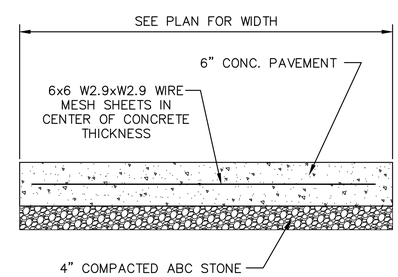

TYPICAL REINFORCED CONCRETE DRIVEWAY SECTION

NOT TO SCALE
CREATED FOR THIS PROJECT

mcgill
1240 19th Street Lane NW
Hickory, NC 28601
828.328.2024
NC Firm License # C-0459
mcgillassociates.com

NCDOT STBG-DA PROJECT EB-5939
FOR THE CITY OF HICKORY
RIVERWALK
BURKE COUNTY, NORTH CAROLINA

NO.	DATE	BY	REVISION DESCRIPTION
2	9/24/20	MDO	ADDENDUM NO. 4

TYPICAL SECTIONS

DR	CHK	REV
RLC	MDO	

DATE: AUGUST, 2020

SHEET 2A

16.01420_DETAILS.dwg

L:\Hickory\Projects\2016 PROJECTS\16.01420 HICKORY NC - Hickory Riverwalk\02_Design Phase\Drawings_Data\DrawingPlansets\CURRENT PLANS\DOT CONTRACT PLANSET\16.01420_DETAILS.dwg 9/28/2020 2:59 PM MATTHEW OETTING

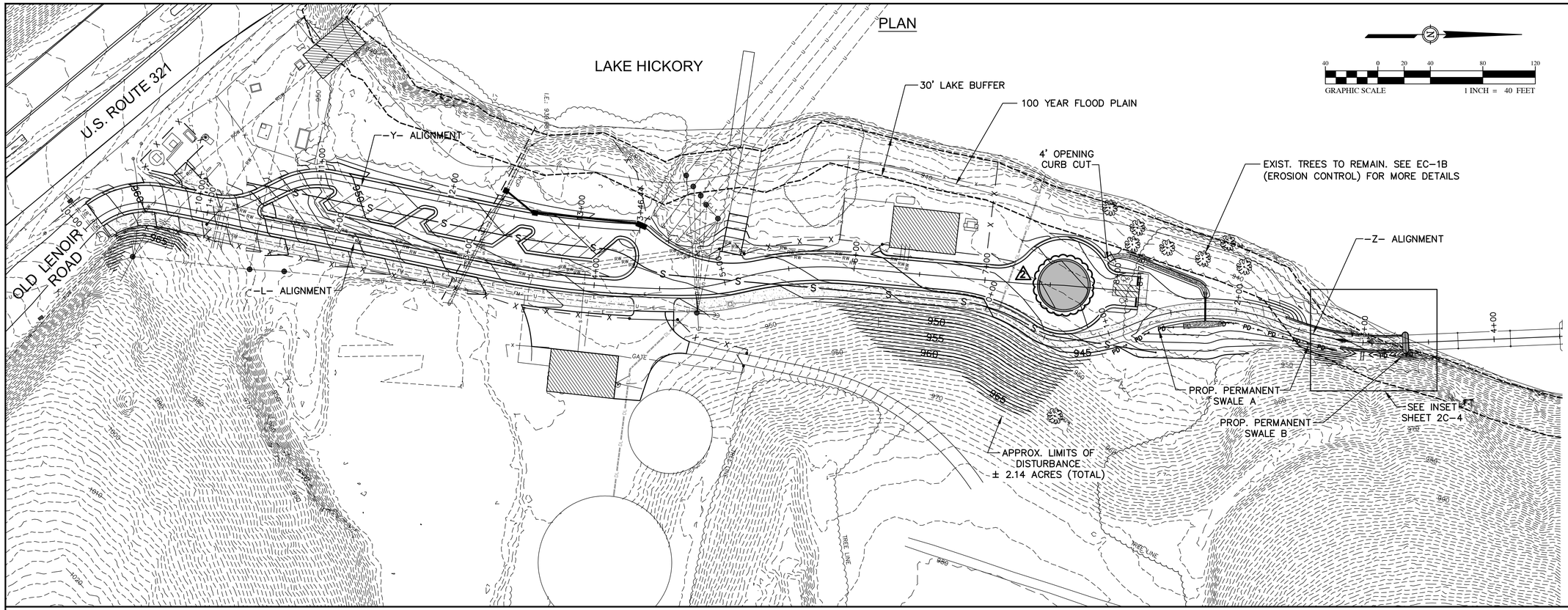

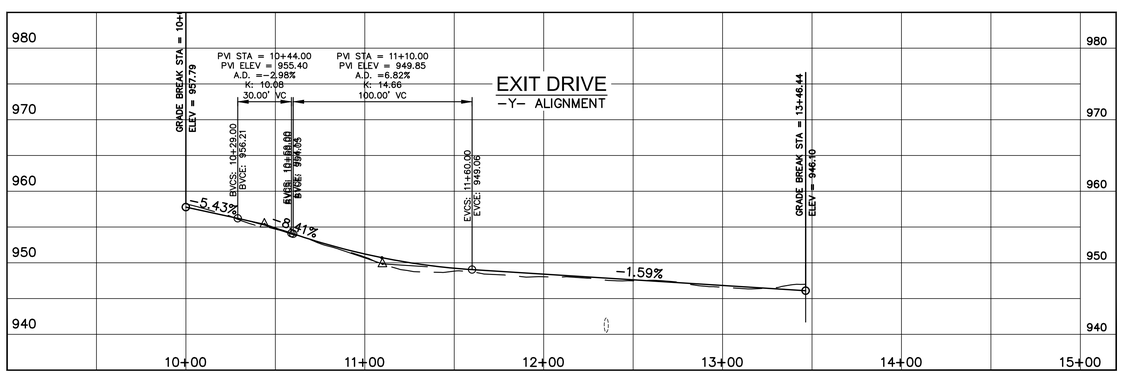

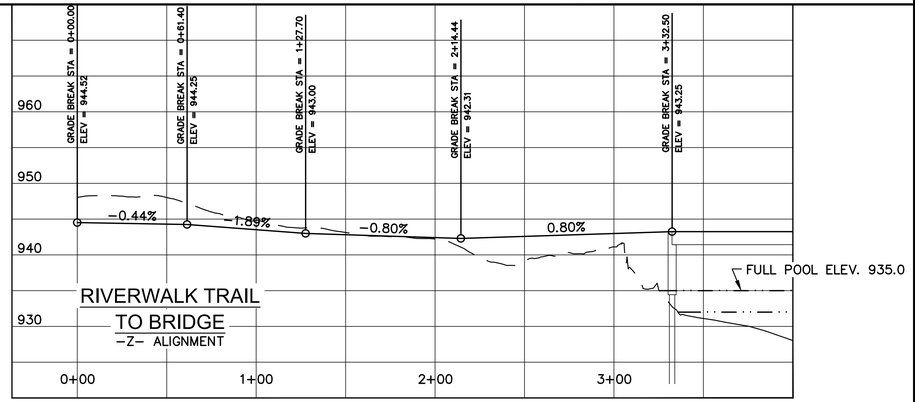

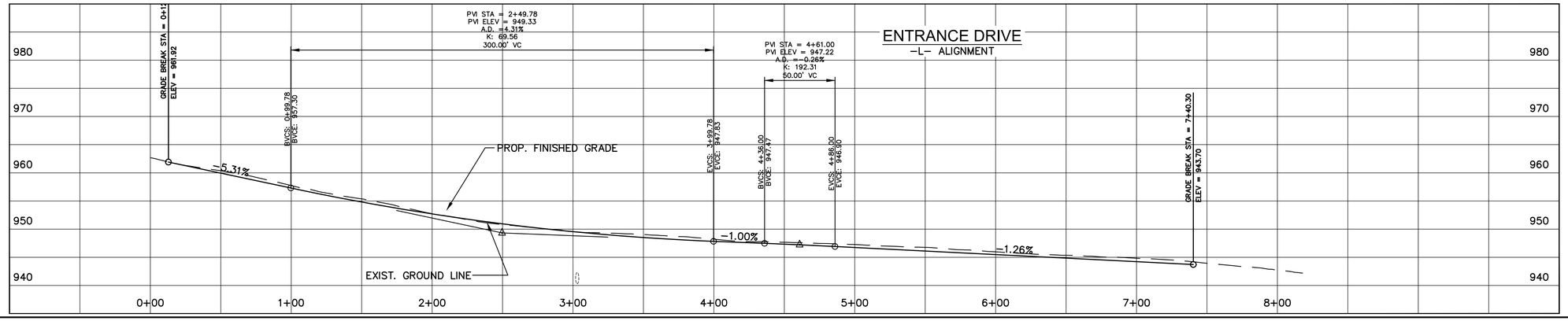

PROFILE

SCALE: HORIZ. 1"= 40'
VERT. 1"= 4'

mcgill
1240 19th Street Lane NW
Hickory, NC 28601
828.328.2024
NC Firm License # C-0459
mcgillassociates.com

NCDOT STBG-DA PROJECT EB-5939
FOR THE CITY OF HICKORY

RIVERWALK

BURKE COUNTY, NORTH CAROLINA

NO	DATE	BY	REVISION DESCRIPTION
2	9/24/20	MDO	ADDENDUM NO. 4
1	9/11/20	MDO	ADDENDUM 2

PLAN - PROFILE SHEET

DR	CHK	REV
RLC	MDO	

DATE: AUGUST, 2020

SHEET
2B

L:\Hickory\Projects\2016 PROJECTS\16.01420 HICKORY NC - Hickory Riverwalk\02_Design Phase\Drawings_Data\DrawingPlansets\CURRENT PLANS\DOT CONTRACT PLANSET\16.01420_PLANS.dwg 9/25/2020 4:33 PM MATTHEW OETTING

LAKE HICKORY

GRAPHIC SCALE 1 INCH = 10 FEET

30' LAKE BUFFER LINE

PROP. BLIND SWALE (SEE DETAIL ON SHEET 2D-1)

SYMBOL LEGEND

TC TOP OF CURB ELEVATION
TBC TOP BACK OF MOUNTABLE CURB ELEVATION
EP EDGE OF PAVEMENT ELEVATION
BW BACK OF WALK ELEVATION
FL GUTTER FLOW LINE ELEVATION
GR GRADE AT BOTTOM OF WALL

RELOCATED DISCHARGE LINE BY CITY OF HICKORY PRIOR TO COMMENCEMENT OF WORK ON THIS PROJECT. CONTRACTOR SHALL CONTACT CITY OF HICKORY FOR EXACT LOCATION.

EXIST. DISCHARGE LINE TO REMAIN

MATCH LINE "B"

MATCH LINE "C"

OUTLET

PROP. PERMANENT SWALE A

TBC 942.52 EP 942.10
TBC 943.57 EP 943.15
TBC 942.22 EP 941.80
TBC 943.77 EP 943.35
TBC 942.22 EP 941.80
TBC 942.42 EP 942.00
TBC 944.34 EP 943.92
TBC 942.82 EP 942.40
TBC 944.82 EP 944.40
TBC 944.72 EP 944.30
TBC 944.70 EP 944.20
TBC 944.52 EP 944.10
TBC 943.02 EP 942.60
TBC 943.32 EP 942.90
TBC 944.17 EP 943.75

TC 942.85 EP 942.45
TC 942.56 EP 943.16
TC 942.60 EP 942.20
TC 944.10 EP 943.70
TC 943.00 EP 942.60
TC 943.03 EP 942.53
TC 943.05 EP 942.55
TC 945.21 EP 944.71
TC 944.20 EP 943.80
TC 943.40 EP 943.00
TC 943.85 EP 943.45
TC 942.66 EP 942.26

EP 945.10
EP 941.75
EW 942.30
EW 942.40
EW 942.47
EW 942.47
EW 942.57
EW 943.13
EW 943.02
EW 942.60
EW 942.50
EW 943.21
EW 942.82
EW 943.01
EW 943.65
EW 943.85
EW 944.45

P 940.00
CC-4
PI: 7+60.31
TC: 7+31.32
PCC: 7+00
PRC: 8+00
PRC: 1+00
PRC: 2+00
PRC: 1+00
PRC: 2+00
PRC: 1+17.83
PRC: 2+17.30
943.38
944.10
946.25

940 941 942 943 944 945 946 950 955 960 965 970

mcgill
1240 19th Street Lane NW
Hickory, NC 28601
828.328.2024
NC Firm License # C-0459
mcgillassociates.com

16.01420_PLANS.dwg

NCDOT STBG-DA PROJECT EB-5939
FOR THE CITY OF HICKORY

RIVERWALK

BURKE COUNTY, NORTH CAROLINA

NO	DATE	BY	REVISION DESCRIPTION
2	9/24/20	MDO	ADDENDUM NO. 4
1	9/11/20	MDO	ADDENDUM NO. 2

SITE GRDING PLAN

100% SUBMITTAL

DR RLC | CHK MDO | REV

DATE: AUGUST, 2020

SHEET 2C-3

L:\Hickory\Projects\2016 PROJECTS\16.01420 HICKORY NC - Hickory Riverwalk\02_Design Phase\Drawings_Data\DrawingPlansets\CURRENT PLANS\DOT CONTRACT PLANSET\16.01420_PLANS.dwg 9/25/2020 4:33 PM MATTHEW OETTING

LAKE HICKORY

U.S. ROUTE 321

EXIST. PUMP STATION TO REMAIN

EXIST. FENCE TO BE REMOVED (CITY OF HICKORY CONTRACT)

EXIST. CONC. PAD TO BE REMOVED (CITY OF HICKORY CONTRACT)

EXIST. GUARDRAIL TO BE REMOVED

EXIST. CONCRETE TO BE REMOVED

18" RCP

SAW CUT, REMOVE, AND DISPOSE OF EXIST. ASPHALT PAVEMENT (SEE NOTES EC-43 ON SHEET EC-1A)

EXIST. FENCE TO REMAIN

EXIST. 18" (ABANDONED) STORM CULVERT TO BE EXPOSED AND CUT IN THIS APPROX. LOCATION. BOTH ENDS OF CUT PIPE TO BE PLUGGED AND UPSTREAM PIPE TO BE FILLED WITH FLOWABLE FILL

PROP. TREE LINE

EXIST. TREES TO BE REMOVED AND DISPOSED OF (SEE NOTES EC-43 ON SHEET EC-1A)

REMOVE EXIST. FENCE CORNER

EXIST. 4" SEWER FORCE MAIN

EXIST. (3) 36" RAW WATER LINES

EXIST. 24" RCP STORM CULVERT

EXIST. PAVEMENT TO BE REMOVED

REMOVE EXIST. FENCE AND POLES

EXIST. 2" SANITARY SEWER FORCE MAIN

EXIST. FENCE AND GATE TO BE REMOVED (PART OF THIS CONTRACT)

EXIST. UTILITY POLE (TYPICAL)

EXIST. OVERHEAD ELECTRIC LINE

POND

ELECTRIC DUCT BANK

SAW CUT EXIST. ASPH. PAVEMENT, REMOVED AND DISPOSED OF (SEE NOTES EC-43 ON SHEET EC-1A)

EXIST. 4" SEWER FORCE MAIN

EXIST. ASPH. PAVEMENT TO BE MILLED 2"

EXIST. BLDG. TO REMAIN

EXIST. UTILITY POLE (TYPICAL)

EXIST. FLOW METER TO BE RELOCATED BY THE OWNER

EXIST. OVERHEAD ELECTRIC LINE TO BE REMOVED (CITY OF HICKORY CONTRACT)

EXIST. 8" DECANT LINE TO REMAIN

EXIST. CONC. BOAT RAMP

MATCH LINE A

GRAPHIC SCALE 20 0 10 20 40 60 — 1 INCH = 20 FEET

EXIST. TREES TO REMAIN AND BE PROTECTED (SEE SHEET 2D-1 FOR DETAILS)

NOTE: ALL EXISTING UTILITIES SHALL BE LOCATED, MARKED AS NEEDED, AND PROTECTED BY THE CONTRACTOR IN ORDER TO PREVENT DAMAGE DURING CONSTRUCTION.

LAKE HICKORY

EXIST. TREES TO BE REMOVED AND DISPOSED OF (SEE NOTES EC-43 ON SHEET EC-1A)

EXIST. (3) 36" RAW WATER LINES

EXIST. BLDG. TO REMAIN

ELECTRIC DUCT BANK

EXIST. PAVEMENT TO BE REMOVED

EXIST. 8" DECANT LINE TO REMAIN

EXIST. TREES (6) TO BE REMOVED

EXIST. TREES (2) TO BE REMOVED

EXIST. TREES (2) TO BE REMOVED

ELECTRIC DUCT BANK

EXIST. UTILITY POLE TO BE REMOVED (CITY OF HICKORY CONTRACT)

EXIST. UTILITY POLE TO BE REMOVED (CITY OF HICKORY CONTRACT)

EXIST. OVERHEAD ELECTRIC LINE TO BE REMOVED (CITY OF HICKORY CONTRACT)

EXIST. BUILDING TO BE REMOVED (INCLUDING ALL AMENITIES, SLAB FOUNDATION, OIL TANK, RETAINING WALLS, SIDEWALKS, WELL AND SEPTIC SYSTEM) (CITY OF HICKORY CONTRACT)

PROP. TREE LINE

MATCH LINE A

mcgill
1240 19th Street Lane NW
Hickory, NC 28601
828.328.2024
NC Firm License # C-0459
mcgillassociates.com

NCDOT STBG-DA PROJECT EB-5939
FOR THE CITY OF HICKORY

RIVERWALK

BURKE COUNTY, NORTH CAROLINA

NO	DATE	BY	REVISION DESCRIPTION
2	9/24/20	MDO	ADDENDUM NO. 4

EXISTING SITE CONDITIONS and DEMOLITION PLAN

DR	CHK	REV
RLC	MDO	

DATE: AUGUST, 2020

SHEET 2E

L:\Hickory\Projects\2016 PROJECTS\16.01420 HICKORY NC - Hickory Riverwalk\02_Design Phase\Drawings_Data\DrawingPlansets\CURRENT PLANS\DOT CONTRACT PLANSET\16.01420_EXIST-DEMO.dwg 9/25/2020 4:34 PM MATTHEW OETTING

16.01420_EXIST-DEMO.dwg

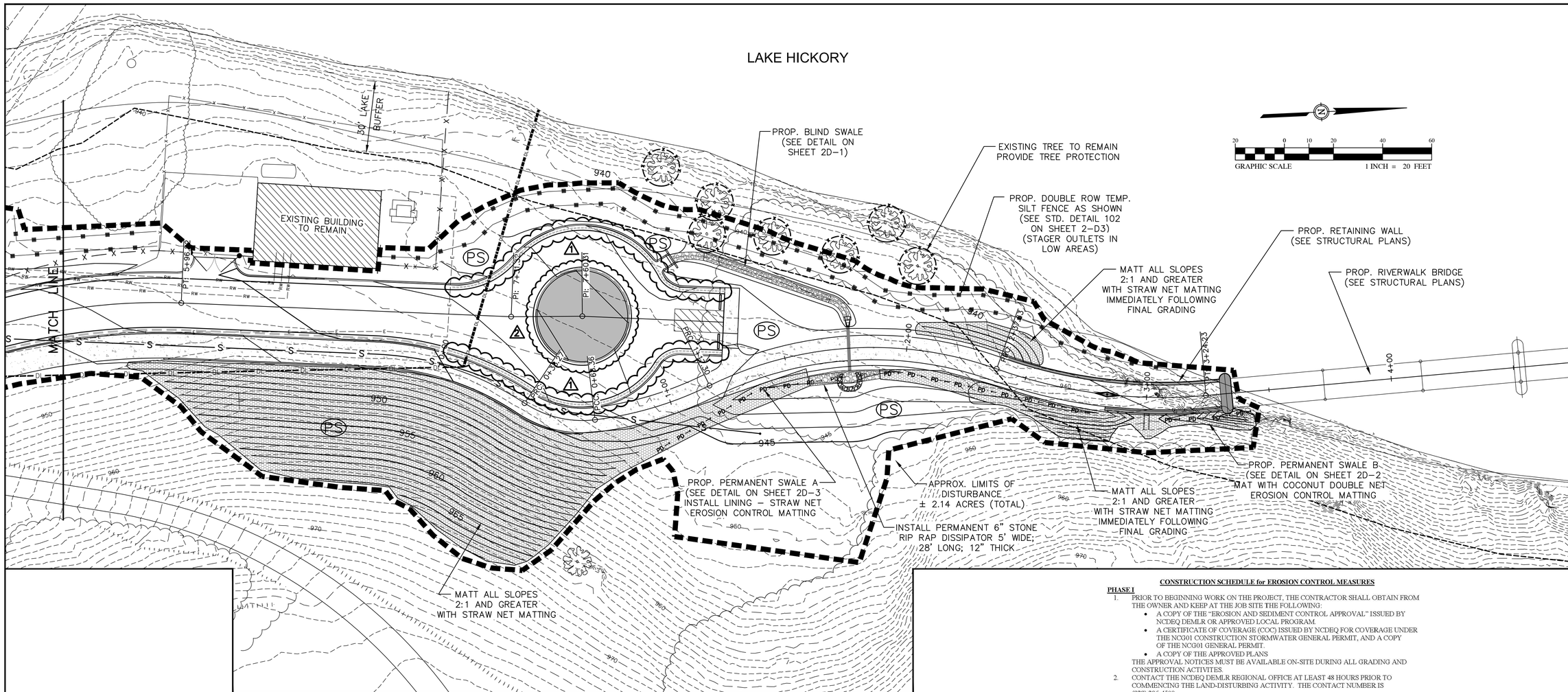

LEGEND

- EROSION CONTROL MATTING (STRAW MATTING)
- EXISTING TREE PROTECTION
- DSP — DRAINAGE STRUCTURE PROTECTION (INLET PROTECTION)
- EXCAVATED DROP INLET PROTECTION
- TEMPORARY SILT FENCE
- TEMPORARY DIVERSION DITCH
- PD → PD → PD → PD → PD → — PERMANENT CLEAN WATER DIVERSION DITCH
- PS — PERMANENT SEEDING
- APPROX. LIMITS OF DISTURBANCE
- TREE PROTECTION FENCING
- TEMPORARY PIPE INLET PROTECTION

IF BORROW IS REQUIRED OR IF WASTE MATERIAL IS GENERATED DURING GRADING OPERATIONS, AN APPROVED EROSION AND SEDIMENT CONTROL PERMIT MUST BE SECURED PRIOR TO INITIATION OF ANY LAND DISTURBING ACTIVITY (15A NCAC 04B.01100)

CONSTRUCTION SCHEDULE for EROSION CONTROL MEASURES

PHASE I

1. PRIOR TO BEGINNING WORK ON THE PROJECT, THE CONTRACTOR SHALL OBTAIN FROM THE OWNER AND KEEP AT THE JOB SITE THE FOLLOWING:
   - A COPY OF THE "EROSION AND SEDIMENT CONTROL APPROVAL" ISSUED BY NCDEQ DEMLR OR APPROVED LOCAL PROGRAM.
   - A CERTIFICATE OF COVERAGE (COC) ISSUED BY NCDEQ FOR COVERAGE UNDER THE NCG01 CONSTRUCTION STORMWATER GENERAL PERMIT, AND A COPY OF THE NCG01 GENERAL PERMIT.
   - A COPY OF THE APPROVED PLANS

   THE APPROVAL NOTICES MUST BE AVAILABLE ON-SITE DURING ALL GRADING AND CONSTRUCTION ACTIVITES.
2. CONTACT THE NCDEQ DEMLR REGIONAL OFFICE AT LEAST 48 HOURS PRIOR TO COMMENCING THE LAND-DISTURBING ACTIVITY. THE CONTACT NUMBER IS (828) 296-4500.
3. FLAG WORK LIMITS BEFORE CONSTRUCTION ACTIVITY BEGINS. THE CONTRACTOR SHALL NOT PERFORM ANY CLEARING BEYOND THE LIMITS SHOWN ON THE PLANS.
4. CONTRACTOR TO COORDINATE MARKING ALL UTILITY LOCATIONS WITH N.C. ONE CALL-CENTER AND THE CITY OF HICKORY. POT HOLING ACTIVITY WILL BE REQUIRED. CONTRACTOR SHALL NOTIFY THE CITY OF ANY CONFLICTS WITH PROPOSED WORK.
5. CONTRACTOR SHALL FAMILIARIZE HIMSELF AND ALL WORKERS WITH ALL PERMITTING DIRECTIVES AND GUIDELINES AS STATED IN THE USACE 404 AND NCDEQ 401 PERMITS PRIOR TO COMMENCING ANY WORK IN RELATION TO THE STRUCTURE AND RETAINING WALLS WITHIN THE LAKE AND BUFFER.
6. INSTALL TEMPORARY CONSTRUCTION ENTRANCE PRIOR TO WORK BEGINNING AT THE ENTRANCE. THE ROADWAY SHALL BE PROTECTED WITH A STABILIZED ENTRANCE TO AVOID TRACKING DIRT AND MUD ONTO PAVED ROADWAYS. CONTRACTOR SHALL WORK WITH THE CITY OF HICKORY TO ESTABLISH CLEAR ROUTINGS FOR THE CITY'S EMPLOYEES FOR ACCESS TO THE SITE. THE SITE IS CURRENTLY A CITY FACILITY WHICH WILL REMAIN IN SERVICE AND REQUIRE CITY WORKERS TO BE COMING AND GOING AT THE SITE.
7. INSTALL SILT FENCE AS SHOWN ON THE PLANS, CLEARING ONLY WHAT IS NECESSARY TO INSTALL THE SILT FENCE. DO NOT INSTALL SILT FENCE ACROSS CHANNELS OR AREAS OF CONCENTRATED FLOWS.
8. INSTALL TEMPORARY ROCK SEDIMENT DAM TYPE "B" PER NCDOT STD. 1634.02 AT FUTURE LOCATION OF C13. INSTALL ASSOCIATED DIVERSION DITCH WITH WATTLES TO DIRECT SEDIMENT LADEN RUN-OFF TO THE SEDIMENT DAM. BEGIN GRADING FOR ROADWAY AND PARKING AREAS, DIRECT RUN-OFF TO THE SEDIMENT DAM.

PHASE II

9. ONCE INLET C13 IS READY TO BE INSTALLED, CONSTRUCT EXCAVATED DROP INLET PROTECTION PER DETAIL AND SPECIFIED SIZE TO REPLACE ROCK SEDIMENT DAM TYPE "B". DIRECT EXISTING DIVERSION DITCH TO THE EXCAVATED DROP INLET.
10. CONTINUE GRADING ACTIVITY. INSTALL PROTECTIVE DRAINAGE STRUCTURES AT ALL STORM DRAIN INLETS.
11. WHEN GRADING FOR ROADWAY AND TURN-AROUND AREA, PROVIDE PROTECTION/STABILIZATION ON GRADED CUT SLOPE IMMEDIATELY UPON REACHING FINISH GRADE, THEN CONTINUE FINE GRADING OF ROADWAY AREA.
12. PLACE STONE BASE ON DRIVEWAYS AND PARKING AREAS AS SOON AS FINAL GRADE IS REACHED.
13. ANY WORK ASSOCIATED WITH THE STRUCTURE AND RETAINING WALLS WITHIN THE BUFFER SHALL BE PERFORMED IN THE DRY. IF PUMPING IS NECESSARY ALL PUMPED WATER SHALL BE RUN THROUGH A SILT BAG PRIOR TO BEING DISCHARGED.
14. SEED AND GRASS AND INSTALL EROSION CONTROL MATTING FOR STABILIZATION ON ALL CUT AND FILL SLOPES ONCE FINISHED GRADE IS REACHED OR WITHIN 7 CALENDAR DAYS AFTER FINAL GRADE IS ACHIEVED.
15. GROUNDCOVER THAT IS SUFFICIENT TO RESTRAIN EROSION MUST BE PLACED ON ALL PERIMETER DIKES, SWALES, DITCHES AND SLOPES WITHIN 7 DAYS. ANY SLOPES STEEPER THAN 3:1 SHALL HAVE GROUND STABILIZATION WITHIN 7 DAYS. SLOPES 3:1 OR FLATTER AND ALL OTHER AREAS SHALL BE STABILIZED WITHIN 14 DAYS (7 DAYS FOR 3:1 SLOPES GREATER THAN 50' IN LENGTH). SEE PLANS FOR STABILIZATION CHART.

PHASE III

16. EROSION CONTROL MEASURES SHALL BE MAINTAINED DURING THE ENTIRE LENGTH OF THE PROJECT AND UNTIL SITE IS STABILIZED.
17. UPON APPROVAL OF THE ENGINEER AND NCDEQ, EROSION CONTROL MEASURES MAY BE REMOVED. FINALIZE GRADES, SEED AND STABILIZE ALL AREAS WHERE MEASURES ARE REMOVED.
18. ESTIMATED TIME TO STABILIZE THE SITE IS TWELVE (12) MONTHS.

mcgill
1240 19th Street Lane NW
Hickory, NC 28601
828.328.2024
NC Firm License # C-0459
mcgillassociates.com

PROFESSIONAL ENGINEER SEAL 041598 MATTHEW D. OETTING 07-29-2020

NCDOT STBG-DA PROJECT EB-5939
FOR THE CITY OF HICKORY

RIVERWALK

BURKE COUNTY, NORTH CAROLINA

NO.	DATE	BY	REVISION DESCRIPTION
2	9/24/20	MDO	ADDENDUM NO. 4
1	9/11/20	MDO	ADDENDUM NO. 2

EROSION CONTROL PLAN

DR: RLC | CHK: MDO | REV:

DATE: JULY, 2020

SHEET

EC-1E

L:\HickoryProjects\2016 PROJECTS\16.01420 HICKORY NC - Hickory Riverwalk\02_Design Phase\Drawings_Data\DrawingPlansets\CURRENT PLANS\DOT CONTRACT PLANSET\16.01420_EROSION.dwg 9/25/2020 4:33 PM MATTHEW OETTING

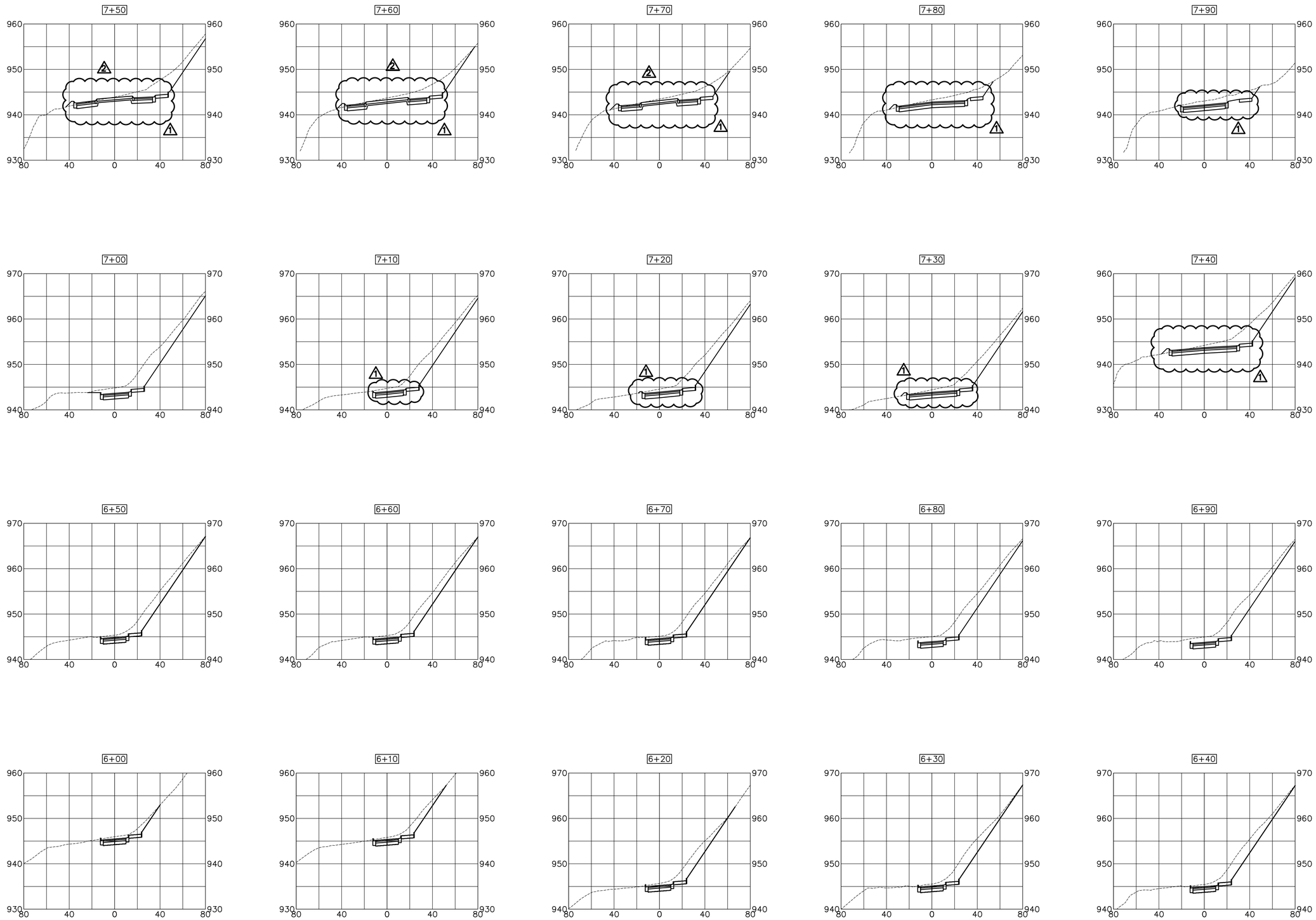

CROSS-SECTIONS

SCALE: HORIZ. 1"= 40'
VERT. 1"= 10'

mcgill
1240 19th Street Lane NW
Hickory, NC 28601
828.328.2024
NC Firm License # C-0459
mcgillassociates.com

PROFESSIONAL ENGINEER SEAL 041598 MATTHEW D. OETTING 9-29-2020

NCDOT STBG-DA PROJECT EB-5939
FOR THE CITY OF HICKORY

RIVERWALK

BURKE COUNTY, NORTH CAROLINA

NO	DATE	BY	REVISION DESCRIPTION
2	9/24/20	MDO	ADDENDUM NO. 4
1	9/11/20	MDO	ADDENDUM NO. 2

ENTRANCE DRIVE
and PARKING LOT
CROSS SECTIONS

DR	CHK	REV
RLC	MDO	

DATE: AUGUST, 2020

SHEET
X-4

L:\Hickory\Projects\2016 PROJECTS\16.01420 HICKORY NC - Hickory Riverwalk\02_Design Phase\Drawings_Data\DrawingPlansets\CURRENT PLANSET\16.01420_ENTRA-PARK X-SEC.dwg 9/25/2020 4:33 PM MATTHEW OETTING