Henry Fork WWTP Biosolids Handling Facilities Upgrade Project

City of Hickory
Hickory, North Carolina
SRF CS370389-22

**ADDENDUM NO. 3**
November 16, 2021

TO: Prospective Bidders

FROM: HDR (Engineer)
440 South Church Street, Suite 1000
Charlotte, NC 28202

OWNER: City of Hickory Public Utilities
1441 9th Ave NE
Hickory, NC 28601

SUBJECT: Henry Fork WWTF Biosolids Handling Facilities Upgrade
SRF CS370389-22

This Addendum is part of the Bidding Documents and the Contract Documents and modifies the original Bidding Documents dated March 2021, as indicated below. Acknowledge receipt of this Addendum in the space provided on the Bid Form. Failure to do so may subject the Bidder to disqualification for award of the associated Contract.

This Addendum consists of 14 pages and the attachments, if any, listed on the last page.

## ADDENDUM NO. 3 SEALS AND SIGNATURES

| | |
|---|---|
| Wesley Oehmig, PE<br>License No. 050942<br> 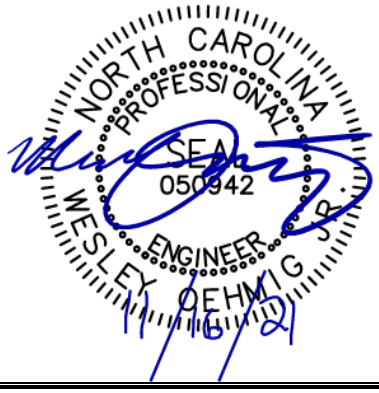 <br> | The seal and signature to the left applies to the changes made via this Addendum for the Work in the following divisions, sections, and Drawings of the proposed Contract Documents:<br>• All edited specifications. |

Engineer's seal and signature does not apply to the documents, or changes thereto, that comprise Division 00, Bidding and Contracting Requirements, except for revisions to provisions of prior Addenda that modify the Specifications and Drawings.

It is a violation applicable laws and regulations governing professional licensing and registration for any person, unless acting under the direction of the licensed and registered design professional(s) indicated above, to alter in any way the proposed Specifications, Drawings, and Addenda for this Project.

## CHANGES TO PRIOR ADDENDA

Bid Form has been revised

## CHANGES TO INTRODUCTORY INFORMATION

None

## CHANGES TO BIDDING REQUIREMENTS

None

## CHANGES TO CONTRACTING REQUIREMENTS

None

## CHANGES TO SPECIFICATIONS

00 45 13 – EJCDC C-451 Qualifications Statement has been added. See attachments.
01 21 00A – Huber Technology Proposal – Replace existing section with new proposal, attached. This proposal has been updated to hold the price firm until the end of February.
31 23 00, 2.1 – Change #67 to #57 stone to match structural drawings.
3.5.B.4 – Change 12" to 8"

40 20 55 – Double Containment Piping System has been added. See attachments.
40 71 00A (instrument schedule)

The following gauges are required and will be added to the schedule and drawings. PMP-1200 suction, PMP-1220 suction, PMP-1277 suction and discharge, PMP-1281 discharge.

Add TIT-1277B similar to TIT-1275
Remove PSL-1250
FE/FIT-1275 is changed to FE/FIT 1276

43 23 15

2.3.A.1.a: Change "65" to "58"
2.3.A.1.d: Change "7.5" to "10"

46 21 10 – This specification has been revised. See attachments.

## CHANGES TO DRAWINGS

01C140 – 6" SS from dried product storage changed to 6" PD.
01C150 – 16" WAS profile – remove "RCP".
12D103 – Keynote 4 change "99A503" to "12A202"
12D302 – Section B – Change OVF on 4" OVF piping from the bottom of the First Stage Odor Control Scrubber to 4" CD

## ATTACHMENTS

The items listed below and bound following this document's "End of Addendum" designation, are part of this Addendum.

Questions and Responses:

1. The Instrument Schedule lists PSL-1250 on drawing 97Y611. 97Y611 does not show this instrument. Is it required?
    a. PSL-1250 is not required. See revisions to instrument list above.

2. Section 46 21 10-2.6.2 appears to outline a local control station with window, and operating devices as outlined. Specification plan 97Y601 appears to only outline a local emergency stop push button and appears to show the devices outlined in 46 21 10-2.6.2 as included on the main panel (LCP-1400). Please confirm if these devices under 46 21 10-2.6.2 are required to be included on a separate local control station, or if they should be included on main panel LCP-1400?
    a. The intention is to have all accessories listed under 46 21 10-2.6.2 included on the Septage Receiving Station LCP-1400, as shown on P&ID 97Y601. The LCS-1400 is intended to be used as a Hauler Access Station that enables the facility to manage waste delivered by haulers from remote sites. The LCS-1400 shall include its own dedicated PLC, HMI and E-stop pushbutton. Refer to contract document 97Y601. Section 46 21 10 has been revised.

3. Please confirm the area classification where LCP-1400, LCS-1400, and HTC-1400 will be located.

a. See 00G007 Keynote 9.

4. Section 46 21 10 references 40 41 13, however does not provide specific details regarding the requirements for HTC-1400. Specification plans 97Y601, and 14E101 appear to show HTC-1400 in its own separate enclosure. Is it acceptable to combine HTC-1400 into the main control panel (LCP-1400)?
    a. As long as the Septage Receiving Station vendor provides the HTC-1400, HDR does not see a problem in combining this functionality with LCP-1400. There is no I&C implication in combining these two panels

5. Spec section 43 23 15 calls for a 6” x 6” self-primer to produce 500 GPM @ 37’ TDH at a minimum 67% efficient and use a 7.5 HP motor. The most efficient 3” solids passing pump Gorman Rupp makes is a model T6A3S-B and that p ump requires a minimum of 10 HP and is rated at 58% percent efficient at that condition. Please revise the spec accordingly.
    a. See revisions to 43 23 15 listed above. Contractor to include electrical changes required for larger motor size.

6. Concrete sealer is indicated for bid form Item I. Please advise, which type/product (CS-1, CS-2, CS-3, or other) is required?
    a. CS-2

7. Drawing 01X100 shows two existing pipelines that stay in-place and in-service; the 16" WAS pipe and the 36" SE pipe, both located East of the Rotating Biological Contactor that are to be demolished. Based on pipe profiles and connection points provided in the documents, it appears the 16" WAS pipe invert elevation is at approximately 853' but there is no information provided for the 36" SE pipe that connects to the Chlorine Contact Basins. Can you please provide an invert elevation for this 36" SE pipe?
    a. Invert is approximately 854 FT at choline contact basin. Slope is approximately 0.9%

8. Reference 00 41 13 - Article 2 - Attachments to This Bid. Section 2.01F. requests the submission of a "Bidder Qualification Statement". A Bidder Qualifications Statement EJCDC C-451 was not included in the specifications. Can you please provide this form or clarify if such document is to be included with the bid submission?
    a. Form has been added – see changes to specifications above.

9. Are the grooved couplings described in 40 05 00 system 4 for the Cake piping required to have stainless steel housings?
    a. All piping and other fittings stainless.

10. Per spec section 02 41 00.1.2, the entity and personnel performing electrical removals shall be electrician(s) legally qualified to perform electrical construction and electrical work. Is it allowable for the electrician(s) to only perform "make safe" of the electrical components, equipment, and systems to be demolished so the demolition activities can be performed by other parties? Please clarify if the demolition of these items needs to be performed by the electrician(s).

a. It is allowable for Electrician(s) to only perform work to properly disconnect, discharge or otherwise make safe the components from electrical connections prior to demolition by others.

11. Specification 01 65 50, 3.2, A indicates a temporary storage building. Please provide approximate overall dimensions for this structure. Spec indicates "where shown on the Drawings," however nothing is shown in the drawings. Please clarify.
    a. Contractor is responsible for coordinating temporary storage of equipment based on delivery schedule and construction schedule. Typically larger items are delivered and installed into finished structures and smaller items are stored in Connex boxes or other similar portable storage containers. Size will be determined by largest equipment that needs to be stored and storage unit location, if not shown on drawings, shall be “in a location approved by the Engineer.”

12. Reference 46 36 10. Please confirm that the owner will dispose of all sludge during the Startup, Performance testing, and Demonstration periods.
    a. Confirmed.

13. Can the potable or non-potable water used for startup as described in section 01 75 00 paragraph 3.2 C 4 be discharged down the storm drains?
    a. Discharge shall be to plant drain system.

14. Reference 01C141. Are there any other structures tied into the 6" SS line running into SSA-MH2 other than the old admin building that need to remain active during construction?
    a. No other structures to remain active.

15. Drawing 01C141 calls out to coordinate with owner to ensure no flow from 6" SS running from old admin building to SSA-MH2. Is there an allowable shutdown duration for this line?
    a. Allowable duration can be coordinated with Owner but will be at least 1 day.

16. Reference 01E102. Can you please provide a detail for electrical manholes?
    a. Manhole requirements and minimum sizes are detailed in specification section 26 05 43 - 2.2, 2.3 and 3.2.

17. Reference 01E102. Can you please provide a detail for electrical handholes?
    a. Handhole requirements and minimum sizes are detailed in specification section 26 05 43 - 2.2, 2.3 and 3.2.

18. Drawing 01E102 shows a lightly shaded MHP4 at the bottom center of the drawing. Box appears to be on the existing duct bank as well as having the new duct bank go through it. Drawing 01E101 shows an existing manhole at this location already but calls it out as EHM2. Is the electrician to install a new manhole next to the existing duct bank or is manhole EMH2 being repurposed to include the new conduit and wire passing through? If the electrician is to connect into existing manhole, can you please provide a detail showing this work as we are not sure of the size of the existing manhole?

a. Existing manhole is being repurposed and renamed to MHP4. See Key Note 3 on sheet 01E103. Per the 1997 facility record drawings, the manhole is shown to have the following clear dimensions: 6'x6'x6'.

19. Reference 01E102. Can you please provide a detail for the splice box on the new duct bank by the existing raw sewage PS electrical building?
    a. Basis of design for the splice box is by Power Design Inc., model #PE4-74-3, pad mount enclosure with double doors. https://www.powerdesigninc.com/product-category/padmount-enclosure/double-door-series/

20. Reference 01E102. Is there a sequence or allowable shutdown duration for the switchover from existing XFMR2 to the new feeds for the raw sewage PS electrical building? Can this work be completed during a shutdown or does a temp generator or temp feeds need to be provided?
    a. The existing generator in the generator building will need to operate continuously to provide power during the switchover. Contractor will be responsible for the fuel consumption during the switchover. The switchover needs to be completed in less than 24 hours.

21. Is there any requirement for the red dye for the duct banks?
    a. None.

22. Is the Insta-Tee connection detail shown on Detail 6 of drawing 01C515 to be used in a specific location?
    a. The INSERTA-TEE connection can be used when replacing the SS line with PVC as shown on O1C141. See question #59.

23. Reference 23 31 16. Are the DSA, DEX, and FA systems required to be installed by a licensed HVAC contractor since the material for these systems is listed in Division 23 - Heating ventilating and Air Conditioning?
    a. No

24. Specification 13 34 19 indicates Nucor Building Systems as an acceptable manufacturer for the pre-engineered metal buildings. There are multiple Nucor companies that manufacture metal buildings. Please confirm any Nucor metal building manufacturers that will be considered as an acceptable manufacturer.
    a. Other companies under Nucor will be considered as long as they meet all of the requirements listed within the specification and meet the requirements under qualifications in 1.2.B.

25. 1/12A301 shows tube steel supports at overhead doors by PEMB manufacturer. Is there a more specific detail on how the tube steel is attached? In the past when designs have shown a similar detail the overhead door companies say they do not need it. Please provide additional clarity for the steel frame as this can be expensive if it is required to run column-to-column.
    a. Assuming this is in reference to 1/15A502. The tube shown in Detail 1/15A502, is intended to be a girt for the attachment of the precast panel to the pre-

engineered metal building, similar to the wide flange section shown in Detail 10/12S301. The tube is not required for the overhead door, but to support the top of the precast panels. It is anticipated that at roll up door locations this steel may be required to be higher due to the door coil. A wide flange or others shape would also be acceptable here, provided it meets the loading requirements on Detail 10/12S301.

26. Several spec sections refer to the Solids Receiving Stations "Hauler" being provided by the Septage Receiving Station vendor. These are two separate systems. It's not typical for a septage hauler station to also control separate equipment, is it truly the intent for this to be one supplier?
    a. Yes, the hauler access station and associated software used at the Septage Receiving Station shall be the same as that used at the Series 11 Solids receiving Station.

27. In reference to Q&A responses for question 7 and 18 related to pre-selected supplier Huber's terms & conditions in Addendum 1 dated 10/29/21, it is stated in the answers for these questions that the "General Contractor and System Supplier shall enter into its own contract regarding, terms, payment, and retainage." Subsequently in question 18 "The selected Bidder is responsible for contracting directly with Huber". In light of these questions and responses within Addendum 1, can the Huber Standard Terms & Conditions be removed from the project bidding/contract documents since the Contractor is to enter into a mutually agreed upon contract directly with Huber (pre-selected System Supplier) for equipment purchase?
    a. Huber proposal has been updated. See changes to specifications above. Terms and conditions are standard issue. Contractor is responsible for negotiating changes to these terms.

28. Are the control panels supplied with section 46 21 10 required to meet Div. 26 / Div. 40?
    a. Control panels shall meet requirements of Division 40 specifications and general requirements of Division 26 specifications.

29. Per section 46 21 10, is it acceptable to include the heat tracing controls in control panel LCP-1400, in lieu of providing a separate heat trace control panel? If a separate Heat trace control panel is required, please provide specific requirements for HTC-1400 including hazardous classification.
    a. Acceptable to include controls in LCP-1400.

30. Can you add SAVÉCO to the Bid Form for Section 46 21 10?
    a. See Bid Form included with this Addendum.

31. Per section 46 21 10 2.2.C.3 Drawing 00G007, Note 9 indicates that the Septage Receiving Station is located outdoors in a Class I, Division 2 hazardous area. However, this system is completely enclosed. Is C1D2 necessary per code?
    a. Note indicates that this classification applies within 10-ft envelope around equipment and open channel.

32. Per section 46 21 10 2.5.C.1: Please confirm that the inlet valve to the Septage Receiving Station is a pinch valve as indicated elsewhere in this specification and in the Plan Sheets, rather than an electrically actuated ball valve as indicated in this paragraph.
    a. Pinch valve to be provided. Revised specification attached.

33. Section 46 21 10 2.6.1.a & b requires a PLC and OIT provided with the main control panel (LCP-1400) as Allen-Bradley type. A specific PLC and OIT type is not outlined. Is an Allen-Bradley MicroLogix 1400 PLC, and Allen-Bradley PanelView 800 4" display acceptable, or should the PLC and OIT be provided per 40 63 43, and 40 62 16 respectively?
    a. Allen-Bradley Micrologix 1400 and PanelView 800 are acceptable.

34. Per section 46 21 10 2.6.2, is the "local operator station" intended to be in the main control panel? It appears to outline a local control station with window, and operating devices as outlined. Specification plan 97Y601 appears to show these devices located on the main control panel (LCP-1400), and only shows a local emergency stop push button station. Please confirm the items outlined in 46 21 10-2.6.2 are to be mounted on LCP-1400, and not a separate local control station.
    a. The intention is to have all accessories listed under 46 21 10-2.6.2 included on the Septage Receiving Station LCP-1400, as shown on P&ID 97Y601. The LCS-1400 is intended to be used as a Hauler Access Station that enables the facility to manage waste delivered by haulers from remote sites. The LCS-1400 shall include its own dedicated PLC, HMI and E-stop pushbutton. Refer to contract document 97Y601.

35. Per section 46 21 10 3.2.A.6, can the 16 hours of classroom training be completed concurrently with the 40 hours of field service startup training?
    a. No, it is likely the same operators will attend both.

36. The Instrument Schedule lists FE/FIT-1275 on drawing 97Y612. 97Y612 has FE/FIT 1276. Are these the same meter?
    a. Yes – Instrument Schedule is be updated to 1276.

37. Drawing 97Y612 shows TIT-1277B, which is not on the instrument schedule. Please confirm the instrument is required.
    a. Yes, this instrument is required. See revisions to instrument schedule above.

38. Drawing 97Y613 shows TIT-1261A to N and 1262 A to N. Keyed note 6 refers to segments A to M for a total of 24 TIT's. The instrument schedule shows 26. Please confirm the correct qty.
    a. There are 13 segments labeled "A" through "N" with the letter "I" not being used. Each segment has TIT-1261 and TIT-1262 for a total of 26 instruments. Keynote 6 refers to dryer air sequence only, and not total of TIT's.

39. Section 43 21 00 paragraph 3.1C states "Provide pressure gage with isolation valve assembly on discharge of all pumps and on suction and discharge of all non-submersible units". The following gauges are missing from the instrument drawings and schedule; 97Y604-PMP-1200 suction, 97Y608-PMP-1220 suction, 97Y611-PMP-1250 suction,

97Y612-PMP-1277 suction and discharge, 97Y614-PMPs-1271,1272,1273,1274 suction and discharge, 97Y615-PMP-1281 discharge, PMP-1280, 1285, 1288 suction, 97Y616-PMP-1290 and 1295 suction. Are all of these gauges required? Please add the gauges that are required to the instrument drawings and schedule.

a. The following gauges are required and will be added to the schedule and drawings. PMP-1200 suction, PMP-1220 suction, PMP-1277 suction and discharge, PMP-1281 discharge.

40. Is there a specification for the double contained chemical piping shown on 12D114 feeding the second stage odor control scrubber SCR-1295?
    a. See added specification above.

41. Drawing 98E603 shows LCP-1090 for the sump pump PMP-1090 but the sump pump spec and P&ID's do not reference this panel. P&ID 97Y603 calls for sump pump to not have any external controls. Please confirm there is no LCP-1090 to be provided for the sump pump.
    a. Contractor to provide starter for power to the pump and float cables, local HOA switch and status signal to SCADA for the sump pump.

42. Drawing 98E604 shows LCP-1281 for the sump pump PMP-1281 but the sump pump spec and P&ID's do not reference this panel. P&ID 97Y615 calls for sump pump to not have any external controls. Please confirm there is no LCP-1281 to be provided for the sump pump.
    a. Contractor to provide starter for power to the pump and float cables, local HOA switch and status signal to SCADA for the sump pump.

43. Section B on drawing 12D302 shows 4" OVF piping from the bottom of the First Stage Odor Control Scrubber, while the same configuration for the Second Stage Odor Control Scrubber as shown in section 1 on drawing 12D308 is called out as 4" CD. Since OVF and CD have differing piping materials, please confirm that the drawings are correct.
    a. Both pipes should use System 7 for CD piping.

44. P&ID's 97Y604, 607, and 608 show polymer feeding injection rings in the sludge lines to the GBT and Filter Presses. Drawings 12D112 and 114 show polymer feeding the injection rings, but also the thickener and presses equipment. Is the additional piping to the equipment required?
    a. Each of the three units (2 belt filter presses and 1 thickener) has one POLY connection to the injection ring. Contractor can make field fit adjustments as needed.

45. Due to high levels of volatility in the market and extended lead times on materials, would the Owner consider providing an administrative NTP to allow the delegated design items and the procurement process to commence prior to construction activities?
    a. See response to question 19 on Addendum #1. Owner is open to negotiating construction NTP.

46. Drawings 97Y612 and 614 show expansion tanks for the NPW. Please provide a specification for these tanks. Note that they are excluded from Huber's scope.
    a. Coordinate with Huber for tank requirements.

47. Drawing 12D103 Keyed note 4 references detail 8/99A503. There is no drawing 99A503. Please provide the correct reference or detail.
    a. Wall penetration shown on 12A202.

48. Spec section 31 23 00.2.1 calls for fill and backfill materials to be from off-site borrow. Please confirm that all fill and backfill materials are to be from borrow. Please confirm on-site excavated materials are not to be used.
    a. Refer to geotechnical report for information on re-use of materials on-site. Otherwise, material to be from approved off-site borrow.

49. Spec section 31 23 00.2.1 calls for granular fill under building floor slabs-on-grade, electrical equipment pads, manholes and handholes to be No. 67 stone but the drawings all call for No. 57 stone. Please confirm which material is required under the items named.
    a. #57 stone. See changes to specifications above.

50. Spec section 31 23 00.3.5.B.4 calls for a minimum 12-inch working surface over the approved subgrade, but the drawings all call for 8-inch of No. 57 stone under the slabs and footings. Please clarify if the indicated 12-inch working surface is to be below the 8-inch No. 57 stone base material shown on the drawings. If so, please clarify what the 12-inch working surface material is to be. If the working surface in the spec is to be the same surface as the stone shown under slab or footings shown on the drawings, please clarify if the 8-inch or the 12-inch is the correct thickness.
    a. 8-inch is correct. See changes to specifications above.

51. Concrete sealers CS-1, CS-2, and CS-3 are indicated in the finish schedule on drawing 12A601, however, only CS-2 appears to be described in the specifications (03 35 00, 2.2, A) as "Chemical Sealer." Please provide additional details for CS-1 and CS-3.
    a. Intent is for the sealers to be as follows:
        i. CS-1 is the Euclid Chemical Super Diamond Clear VOX or equal.
        ii. CS-2 is the Euclid Chemical Euco Diamond Hard or equal
        iii. CS-3 is the Euclid Chemical Baracade WB 244 or equal.

52. P&ID 97Y601 shows a 3/4" NPW line feeding pinch valve PCV-1400, but that line does not appear on drawing 14D101. Is it required?
    a. If a water-actuated pinch valve is selected use ¾" NPW to supply water. If electric actuated valve is selected, provide electrical connection.

53. Does the authority having jurisdiction require an indicating post on the fire line gate valve outside of the solids processing building?
    a. Yes, contractor to provide indicating post.

54. The pipe profile of the 16" WAS line on drawing 01C150 states the piping material to be RCP, while the pipe schedule on spec section 40 05 00 states that WAS is to be system 3 glass lined ductile iron. Please clarify.
    a. Pipe should be system 3 per specification.

55. Keynote 4 on drawing 01C140 suggests the natural gas line is to be tied in at some future time. I see no gas line in the vicinity. Is the contractor responsible for the tie-in, or will the gas utility perform the connection?
    a. Contractor to stub up gas line at gas meter pad. Contractor is responsible for installing pad and stubbing lines going to the building. Natural gas supplier will install new gas pipeline to the pad and install meters on pad.

56. Is there an allowance we should carry in our proposal for the gas tie-in shown on 01C140?
    a. Tie in by utility. See answer to #55.

57. Drawing 01C140 calls the line from the dried product storage facility to SSA-MH7 as sanitary sewer (SS) which spec section 22 05 03 lists as hub and spigot cast iron soil pipe. The dried product storage facility drawing 13D101 refers to this line as process drain (PD) which spec 40 05 00 lists as cement lined ductile iron. Please clarify which material is correct.
    a. This should be PD.

58. Is a Depend-O-Lock coupling or equal an acceptable connector for the buried ALP tie-in from TWAS holding basin 1?
    a. Yes, this is acceptable, however it will be subject to test requirements for System 11 (150 PSIG air for 6 hours).

59. Drawing 01C141 calls for the 18" SS line from the septage receiving station to SSA-MH2 to be PVC. Is all SS piping PVC?
    a. No, but this line should be replaced with PVC per drawing.

60. Is Duke Energy responsible for the duct bank shown on 01E102 and 01E103 from the Duke Energy service at the road up by the load interrupter switchgear to the 3000 KVA transformer, or is the electrician responsible to furnish and install all materials for this duct bank?
    a. Yes, Duke Energy is responsible.

61. Please confirm that Duke Energy is furnishing and installing the 3000 KVA utility transformer shown on 01E102 and 98E602.
    a. Duke Energy will furnish and installed the transformer. Contractor to provide pad per Duke Energy requirements.

62. Is the electrician responsible for disconnecting the feeders from the load interrupter switchgear or is that by Duke Energy?
    a. At the load interrupter switchgear, the contractor is responsible for disconnecting the feeder to transformer XFMR2.

63. The Septage Receiving Station dumpster area slab shown on drawing 14S101 has two Top of Concrete (TOC) elevations called out, elevation 861.50' and elevation 862.50'. This dumpster area has concrete curbs on two sides which appear to have a TOC elevation 862.50' based on the sectional views. Please confirm the TOC elevation callout of 862.50' in the plan view is for the concrete curbs and not for the concrete slab in the dumpster area.
    a. Main slab is 861.00 with curbs at 861.5. Dumpster area is 861.5 with walls on two sides at 862.5.

64. Drawing 01C141 calls for what appears to be a new doghouse manhole, SSA-MH1, to be installed on the existing 42" RS line. A callout on the drawing calls for a bypass line to be used during the installation of this manhole. In the Sanitary Sewer A profile shown on drawing 01C150, the shading of this manhole depicts it as existing. Please confirm that manhole SSA-MH1 is a new doghouse manhole to be installed.
    a. New doghouse manhole to be installed.

65. Spec section 01 14 16.3.4.A.e.3 calls for providing temporary cover over WAS Basin No. 2 for odor control while the basin is used to hold Primary Sludge. Being temporary in nature, please confirm that typical odor control covers such as Halston aluminum covers are not required. Please clarify if temporary odor control piping is required to be tied into this temporary cover or if the foul air is not required to be evacuated from the basin during this period.
    a. Confirmed, aluminum covers and FA ventilation not required.

66. Spec section 01 14 16.3.4.C describes Shutdown C for WAS Basin No.2. For shutdown C listed in 01 14 16 Table B, it lists the shutdown as being for WAS Basin No.1. Please confirm that the table should list shutdown C as for WAS Basin No.2.
    a. Confirmed.

67. Drawing 10D102 shows new 10" ALP piping from TWAS Holding Basins No 1 & No 2 connecting to existing ALP below grade piping outside of the structure. The removal/installation of this pipe connection with the valve replacements will require the low-pressure air to be temporarily out of service for both TWAS Holding Basins Nos 1 & 2. Does TWAS Holding Basin No 2 require ALP service when it is being temporarily used for Primary Sludge holding? Can the low-pressure air feed to both TWAS Holding Basins be temporarily out of service while the new pipe connection and valves are installed?
    a. Low pressure air service can be shut off temporarily while connections are made and valves replaced. Contractor to coordinate shutdown of this service with the Owner. No air needs to be applied to the primary sludge.

68. Drawing 01C141 calls for a temporary bypass line to be installed on the existing 12" PSL pipe to carry Primary Sludge flow to TWAS Holding Basin #2. Note 8 on the drawing calls for isolation of the pipe by installing a valve. Is this valve to be a permanent plug valve or is it a temporary line stop installation? Please confirm the intended location of this valve is to be between the temporary bypass pipe connection point and the PS Holding Basin.
    a. Temporary valve installed between the bypass line and the PS Holding Basin.

69. Spec section 01 14 16.3.4.A.1.e.1.c calls to route temporary pipe across PS Basin to WAS Basin No 2. Section 3.4.A.1.e.1.c.2 then calls to provide an elbow and drop the pipe into WAS Basin No 1. Please confirm the temporary piping carrying Primary Sludge is to be run to WAS Basin No 2, not WAS Basin No 1.
    a. Drop into TWAS Basin No 2.

70. Note 5 on drawing 01X100 states it is assumed that the Rotating Biological Contactors (RBC) extend 8 to 9 feet below existing grade and excavation to a minimum 1 foot below the RBCs is required. To properly evaluate demolition scope and pricing, can you please provide details on the thickness of the concrete elements that will need to be demolished?
    a. This information is not available.

71. Per drawing 01C141, what size is the water main feeding the new 3/4" water service to the septage receiving station?
    a. O1C141 labels this as 2” PW.

72. Drawing 01X100 shows what appears to be concrete sidewalks, pads and site concrete stairs located East of the existing Odor Control Scrubber, Outdoor Electrical Gear and the Storage Building that are to be demolished. These concrete sidewalks, pads and site concrete stairs are not indicated to be demolished but based on drawings 01C100, 01C110, 01C120 and 01C140, these concrete sidewalks and pads appear to be removed. The existing concrete site stairs appear to be removed and replaced in-kind based on drawing 01C110. Please confirm the existing concrete sidewalks and pads are to be demolished and the concrete site stairs are to be removed and replaced in-kind.
    a. Confirmed.

73. Section 23 31 16.2.2 requires a temperature of 0-185 degrees F for DSA and FA and 0-250 degrees F for the DEX, and the overall relative humidity is between 40 and 100 percent. Our coated ductwork has a max temperature/humidity combination rating of 125 degrees F at 100 % relative humidity(water). As the humidity level goes down from 100% to a non-condensing atmosphere the temperature ratings on our chemical compatibility matrix apply. Will your process conditions land within these criteria?
    a. No additional details are currently available.

74. On drawing 12D103, is the elbow connecting from the DSA to the fans to be supplied by the dryer system manufacturer or from the duct supplier?
    a. This will be supplied by Huber per 97Y616.

75. On drawing 12D103, does the heat exchange system remove humidity as well and if so, what is the expected humidity levels of the DEX duct after the heat exchange system going outside of the building?
    a. Coordinate with Huber as this equipment is designed and supplied by them.

**END OF ADDENDUM NO. 3**

Attachments:

- Revised Table of Contents for Specifications
- 00 41 13 – Bid Form
- 00 45 13 – EJCDC C-451 Bidders Qualification Statement
- 01 21 00A – Huber Technology Proposal dated 11/12/21
- 40 20 55 – This specification has been added to the project. See attached.
- 46 21 10 – See attached revised specification.
- 1997 Record Drawings – Henry Fork WWTP Expansion and Upgrade A-C – (Electrical and Controls) – Accuracy of these drawings has not been verified. These are provided as general information only.

# TABLE OF CONTENTS

**DIVISION 00 — PROCUREMENT AND CONTRACTING REQUIREMENTS**
00 01 07 - SEALS AND SIGNATURES
00 11 13 - ADVERTISEMENT FOR BIDS (EJCDC C-111—2018)
00 21 13 - INSTRUCTIONS TO BIDDERS (EJCDC C-200—2018)
00 41 13 - BID FORM (EJCDC C-410—2018)
00 43 13 - BID BOND PENAL SUM FORM (EJCDC C-430—2018)
00 45 13 - EJCDC C-451 QUALIFICATIONS STATEMENT 2018
00 51 16 - NOTICE OF AWARD (EJCDC C-510—2018)
00 52 13 - AGREEMENT (EJCDC C-520—2018)
00 55 00 - NOTICE TO PROCEED (EJCDC C-550—2018)
00 61 13 - PERFORMANCE BOND (EJCDC C-610—2018)
00 61 14 - PAYMENT BOND (EJCDC C-615—2018)
00 62 16 - CERTIFICATE OF LIABILITY INSURANCE
00 63 36 - FIELD ORDER (EJCDC C-942—2018)
00 63 49 - WORK CHANGE DIRECTIVE (EJCDC C-940-—2018)
00 63 57 - CHANGE ORDER (EJCDC C-941)
00 72 13 - GENERAL CONDITIONS (EJCDC C-700—2018)
00 73 00 - SUPPLEMENTARY CONDITIONS (EJCDC C-800—2018)
00 73 50 - STATUTORY AND FUNDING-FINANCING ENTITY REQUIREMENTS
00 73 50A - NC DIVISION OF WATER INFRASTRUCTURE MBE-WBE (DBE) COMPLIANCE SUPPLEMENT
00 73 50B - DAVIS-BACON INSTRUCTIONS FOR SRF PROJECTS
00 73 50C - WAGE DETERMINATION SCHEDULE
00 73 50E - AMERICAN IRON AND STEEL (AIS)
00 73 50D - WAGE DETERMINATION SCHEDULE ATTACHMENT

**DIVISION 01 — GENERAL REQUIREMENTS**
01 11 00 - SUMMARY OF WORK
01 14 16 - COORDINATION WITH OWNER'S OPERATIONS
01 21 00 - ALLOWANCES
01 22 00 - MEASUREMENT AND PAYMENT
01 25 00 - SUBSTITUTION PROCEDURES
01 25 13 - PRODUCT SUBSTITUTIONS
01 26 00 - CONTRACT MODIFICATION PROCEDURES
01 29 73 - SCHEDULE OF VALUES
01 29 76 - PROGRESS PAYMENT PROCEDURES
01 30 00 - SPECIAL CONDITIONS
01 31 13 - PROJECT COORDINATION
01 31 19 - PROJECT MEETINGS
01 31 26 - ELECTRONIC COMMUNICATION PROTOCOLS
01 32 16 - CONSTRUCTION PROGRESS SCHEDULE
01 33 00 - SUBMITTAL PROCEDURES
01 33 04 - OPERATION AND MAINTENANCE MANUALS
01 35 05 - ENVIRONMENTAL PROTECTION AND SPECIAL CONTROLS
01 35 43.13 - ENVIRONMENTAL PROCEDURES FOR HAZARDOUS MATERIALS
01 35 44 - SPILL PREVENTION CONTROL AND COUNTERMEASURES PLAN
01 45 33 - SPECIAL INSPECTIONS AND TESTING PROGRAM
01 51 05 - TEMPORARY UTILITIES
01 55 13 - VEHICULAR ACCESS AND PARKING
01 57 33 - TEMPORARY SECURITY
01 61 03 - EQUIPMENT - BASIC REQUIREMENTS
01 61 05 - MAJOR EQUIPMENT SUPPLIERS
01 62 00 - PRODUCT OPTIONS

01 65 50 - PRODUCT DELIVERY, STORAGE, AND HANDLING
01 71 23 - FIELD ENGINEERING
01 71 33 - PROTECTION OF THE WORK AND PROPERTY
01 73 20 - OPENINGS AND PENETRATIONS IN CONSTRUCTION
01 73 29 - CUTTING AND PATCHING
01 74 00 - CLEANING
01 75 00 - CHECKOUT AND START-UP PROCEDURES
01 77 19 - CLOSEOUT REQUIREMENTS
01 78 36 - WARRANTIES
01 78 39 - PROJECT RECORD DOCUMENTS
01 78 43 - SPARE PARTS AND EXTRA MATERIALS
01 81 10 - WIND AND SEISMIC DESIGN CRITERIA

**DIVISION 02 — EXISTING CONDITIONS**
02 41 00 - DEMOLITION

**DIVISION 03 — CONCRETE**
03 01 03 - CONCRETE REHABILITATION USING SPRAY APPLICATION
03 01 30 - CONCRETE REPAIR AND REHABILITATION
03 05 05 - CONCRETE TESTING AND INSPECTION
03 11 13 - FORMWORK
03 15 19 - ANCHORAGE TO CONCRETE
03 21 00 - REINFORCEMENT
03 31 30 - CONCRETE, MATERIALS AND PROPORTIONING
03 31 31 - CONCRETE MIXING, PLACING, JOINTING, AND CURING
03 35 00 - CONCRETE FINISHING AND REPAIR OF SURFACE DEFECTS
03 42 00 - PRECAST AND PRESTRESSED CONCRETE BUILDING
03 64 23 - CRACK REPAIR AND INJECTION

**DIVISION 05 — METALS**
05 14 00 - STRUCTURAL ALUMINUM
05 50 00 - METAL FABRICATIONS
05 52 02 - ALUMINUM RAILINGS

**DIVISION 06 — WOOD, PLASTICS, AND COMPOSITES**
06 10 00 - ROUGH CARPENTRY
06 41 00 - ARCHITECTURAL CABINETWORK (MILLWORK)
06 82 00 - FIBERGLASS REINFORCED PLASTIC FABRICATIONS

**DIVISION 07 — THERMAL AND MOISTURE PROTECTION**
07 14 00 - FLUID APPLIED WATERPROOFING
07 18 00 - TRAFFIC COATINGS
07 21 00 - BUILDING INSULATION
07 26 00 - UNDER SLAB VAPOR RETARDER
07 52 16 - SBS MODIFIED BITUMEN ROOFING SYSTEM
07 62 00 - FLASHING AND SHEET METAL
07 72 33 - ROOF HATCHES
07 84 00 - FIRESTOPPING
07 92 00 - JOINT SEALANTS

**DIVISION 08 — OPENINGS**
08 11 16 - ALUMINUM DOORS AND FRAMES
08 15 00 - FIBERGLASS REINFORCED PLASTIC (FRP) DOORS AND FRAMES
08 31 00 - ACCESS DOORS
08 33 22 - ALUMINUM ROLLING OVERHEAD DOORS
08 34 73 - SOUND CONTROL DOOR AND WINDOW ASSEMBLIES
08 41 10 - STOREFRONT
08 51 13 - ALUMINUM WINDOWS
08 70 00 - FINISH HARDWARE

08 81 00 - GLASS AND GLAZING

**DIVISION 09 — FINISHES**
09 22 16 - NON-STRUCTURAL METAL FRAMING
09 29 00 - GYPSUM BOARD
09 30 13 - CERAMIC TILE (CT)
09 51 00 - ACOUSTICAL CEILINGS (ACT)
09 53 00 - ACOUSTICAL CEILING SUSPENSION ASSEMBLIES
09 65 13 - RESILIENT BASE
09 96 00 - HIGH PERFORMANCE INDUSTRIAL COATINGS

**DIVISION 10 — SPECIALTIES**
10 14 00 - IDENTIFICATION DEVICES
10 14 23 - SIGNAGE
10 28 13 - TOILET AND BATH ACCESSORIES
10 44 33 - FIRE PROTECTION SPECIALTIES
10 51 13 - METAL LOCKERS AND LOCKER BENCHES
10 73 16 - ALUMINUM CANOPIES

**DIVISION 11 — EQUIPMENT**
11 53 11 - LABORATORY GLASSWARE, EQUIPMENT AND REFERENCES

**DIVISION 13 — SPECIAL CONSTRUCTION**
13 34 19 - METAL BUILDING SYSTEMS

**DIVISION 21 — FIRE SUPPRESSION**
21 05 00 - FIRE PROTECTION SYSTEMS

**DIVISION 22 — PLUMBING**
22 05 03 - PIPE AND PIPE FITTINGS - PLUMBING SYSTEMS
22 05 23 - GENERAL-DUTY VALVES FOR PLUMBING PIPING
22 05 29 - HANGERS AND SUPPORTS FOR PLUMBING PIPING AND EQUIPMENT
22 05 53 - IDENTIFICATION FOR PLUMBING PIPING AND EQUIPMENT
22 20 00 - PLUMBING FIXTURES AND EQUIPMENT

**DIVISION 23 — HEATING VENTILATING AND AIR CONDITIONING**
23 05 03 - PIPE AND PIPE FITTINGS - HVAC SYSTEMS
23 05 13 - COMMON MOTOR REQUIREMENTS FOR PLUMBING AND HVAC EQUIPMENT
23 05 53 - IDENTIFICATION FOR HVAC, DUCTWORK, PIPING AND HVAC EQUIPMENT
23 05 93 - HVAC SYSTEMS - BALANCING AND TESTING
23 09 00 - INSTRUMENTATION AND CONTROL FOR HVAC SYSTEMS
23 31 00 - HVAC - DUCTWORK
23 31 16 - ODOR CONTROL DUCT AND ACCESSORIES
23 34 00 - HVAC - FANS
23 80 00 - HVAC - EQUIPMENT
23 81 29 - VARIABLE REFRIGERANT FLOW HEAT PUMP SYSTEMS

**DIVISION 26 — ELECTRICAL**
26 05 00 - ELECTRICAL - BASIC REQUIREMENTS
26 05 05 - POWER SYSTEM STUDIES
26 05 19 - WIRE AND CABLE - 600 VOLT AND BELOW
26 05 26 - GROUNDING AND BONDING
26 05 33 - RACEWAYS AND BOXES
26 05 36 - CABLE TRAY
26 05 43 - ELECTRICAL - EXTERIOR UNDERGROUND
26 05 48 - ELECTRICAL SEISMIC RESTRAINT SYSTEMS
26 05 99 - POWER DISTRIBUTION ENCLOSURE
26 08 13 - ACCEPTANCE TESTING
26 09 13 - ELECTRICAL METERING DEVICES
26 09 16 - CONTROL EQUIPMENT ACCESSORIES

26 22 13 - DRY-TYPE TRANSFORMERS
26 24 13 - SWITCHBOARDS
26 24 14 - LOW VOLTAGE PARALLELING SWITCHBOARD
26 24 16 - PANELBOARDS
26 24 19 - MOTOR CONTROL EQUIPMENT
26 26 13 - PACKAGE POWER SUPPLY
26 27 26 - WIRING DEVICES
26 28 00 - OVERCURRENT AND SHORT CIRCUIT PROTECTIVE DEVICES
26 28 16 - SAFETY SWITCHES
26 28 17 - SEPARATELY MOUNTED CIRCUIT BREAKERS
26 29 23 - VARIABLE FREQUENCY DRIVES - LOW VOLTAGE
26 32 14 - ENGINE GENERATOR - DIESEL
26 33 00 - BATTERY AND BATTERY CHARGING SYSTEMS
26 41 13 - LIGHTNING PROTECTION SYSTEM
26 43 13 - LOW VOLTAGE SURGE PROTECTION DEVICES (SPD)
26 50 00 - INTERIOR AND EXTERIOR LIGHTING

**DIVISION 27 — COMMUNICATIONS**
27 10 00 - STRUCTURED CABLING

**DIVISION 28 — ELECTRONIC SAFETY AND SECURITY**
28 42 00 - GAS DETECTION AND ALARM
28 46 00 - FIRE DETECTION AND ALARM

**DIVISION 31 — EARTHWORK**
31 10 00 - SITE CLEARING
31 23 00 - EARTHWORK
31 23 33 - TRENCHING, BACKFILLING, AND COMPACTING FOR UTILITIES
31 25 00 - SOIL EROSION AND SEDIMENT CONTROL
31 32 19 - GEOTEXTILES
31 37 00 - STONE REVETMENT (RIP RAP)

**DIVISION 32 — EXTERIOR IMPROVEMENTS**
32 12 16 - ASPHALTIC CONCRETE VEHICULAR PAVING
32 13 13 - CONCRETE PAVEMENT
32 16 13 - CONCRETE CURB AND GUTTER
32 16 23 - CONCRETE SIDEWALK AND STEPS
32 91 13 - TOPSOILING AND FINISHED GRADING
32 92 00 - SEEDING, SODDING AND LANDSCAPING

**DIVISION 33 — UTILITIES**
33 05 16 - PRECAST CONCRETE MANHOLE STRUCTURES
33 12 19 - FIRE HYDRANT
33 31 11 - GRAVITY SEWER PIPELINE AND MANHOLE CONSTRUCTION
33 40 00 - STORM DRAINAGE SYSTEM
33 44 16 - PREFABRICATED TRENCH DRAIN SYSTEM

**DIVISION 40 — PROCESS INTERCONNECTIONS**
40 05 00 - PIPE AND PIPE FITTINGS - BASIC REQUIREMENTS
40 05 07 - PIPE SUPPORT SYSTEMS
40 05 17 - PIPE - COPPER
40 05 19 - PIPE - DUCTILE
40 05 23 - PIPE - STAINLESS STEEL
40 05 24 - PIPE - STEEL
40 05 26 - PIPE - CAST-IRON SOIL
40 05 31 - PIPE - PLASTIC
40 05 33 - PIPE HIGH PRESSURE STAINLESS STEEL
40 05 51 - VALVES - BASIC REQUIREMENTS
40 05 51A - VALVE SCHEDULE

40 05 52 - MISCELLANEOUS VALVES
40 05 61 - GATE VALVES
40 05 62 - PLUG VALVES
40 05 63 - BALL VALVES
40 05 64 - BUTTERFLY VALVES
40 05 65 - GLOBE VALVES
40 05 66 - CHECK VALVES
40 20 55 - DOUBLE CONTAINMENT PIPING SYSTEM
40 41 13 - HEAT TRACING CABLE
40 42 00 - PIPE, DUCT AND EQUIPMENT INSULATION
40 61 13 - PROCESS CONTROL SYSTEMS GENERAL REQUIREMENTS
40 61 43 - SURGE PROTECTION DEVICES (SPD) FOR INSTRUMENTATION AND CONTROL EQUIPMENT
40 61 96 - PROCESS CONTROL DESCRIPTIONS
40 62 16 - COMPUTER NETWORK AND HUMAN MACHINE INTERFACE (HMI) HARDWARE
40 63 43 - PROGRAMMABLE LOGIC CONTROLLER (PLC) CONTROL SYSTEM
40 63 43A - I-O SCHEDULE
40 67 00 - CONTROL SYSTEM EQUIPMENT PANELS AND RACKS
40 67 00A - PANEL SCHEDULE
40 67 63 - UNINTERRUPTIBLE POWER SUPPLIES (UPS)
40 68 63 - CONFIGURATION OF HMI SOFTWARE AND REPORTS
40 71 00 - FLOW INSTRUMENTATION
40 71 00A - INSTRUMENT SCHEDULE
40 72 00 - LEVEL INSTRUMENTATION
40 73 00 - PRESSURE INSTRUMENTATION
40 78 00 - PANEL MOUNTED INSTRUMENTS
40 91 10 - PRIMARY METERS AND TRANSMITTERS

**DIVISION 41 — MATERIAL PROCESSING AND HANDLING EQUIPMENT**
41 12 12 - CONVEYORS TUBULAR DRAG
41 12 13 - CONVEYORS SHAFTED SCREW
41 12 14 - CONVEYORS SHAFTLESS SCREW - LOADOUT
41 22 23 - HOISTS, TROLLEYS, AND MONORAILS

**DIVISION 43 — PROCESS GAS AND LIQUID HANDLING, PURIFICATION AND STORAGE EQUIPMENT**
43 21 00 - PUMPING EQUIPMENT - BASIC REQUIREMENTS
43 23 15 - PUMPING EQUIPMENT - SELF-PRIMING CENTRIFUGAL PUMPS
43 23 57 - PUMPING EQUIPMENT - PROGRESSING CAVITY
43 23 58 - PUMPING EQUIPMENT - POSITIVE DISPLACEMENT (LOBE)
43 24 16 - PUMPING EQUIPMENT - SUMP
43 41 43 - POLYETHYLENE CHEMICAL TANKS

**DIVISION 44 — POLLUTION AND WASTE CONTROL EQUIPMENT**
44 31 11 - WET CHEMICAL PACKED TOWER ODOR CONTROL EQUIPMENT

**DIVISION 46 — WATER AND WASTEWATER EQUIPMENT**
46 21 10 - SEPTAGE RECEIVING STATION
46 22 00 - CAKE STORAGE BIN
46 24 23 - SLUDGE GRINDERS
46 33 33 - LIQUID POLYMER FEED EQUIPMENT
46 36 10 - BIOSOLIDS BELT DRYING SYSTEM
46 41 00 - MIXERS
46 71 16 - GRAVITY BELT THICKENER
46 76 21 - BELT FILTER PRESS

**APPENDICES**

Appendix A - Geotechnical Report
Appendix B - Permits

# SECTION 00 41 13
# BID FORM
FOR CONSTRUCTION CONTRACT

The terms used in this Bid with initial capital letters have the meanings stated in the Instructions to Bidders, the General Conditions, and the Supplementary Conditions.

## ARTICLE 1—OWNER AND BIDDER

1.01 This Bid is submitted to: **City of Hickory**

1.02 The undersigned Bidder proposes and agrees, if this Bid is accepted, to enter into an Agreement with Owner in the form included in the Bidding Documents to perform all Work as specified or indicated in the Bidding Documents for the prices and within the times indicated in this Bid and in accordance with the other terms and conditions of the Bidding Documents.

1.03 The undersigned Bidder proposes and agrees, if this Bid is accepted, to enter into an Agreement with Huber Technology to provide the Biosolids Dryer System per the attached proposal.

## ARTICLE 2—ATTACHMENTS TO THIS BID

2.01 The following documents are submitted with and made a condition of this Bid:

A. Required Bid security;

B. List of Proposed Subcontractors;

C. List of Proposed Suppliers;

D. Evidence of authority to do business in the state of the Project; or a written covenant to obtain such authority within the time for acceptance of Bids;

E. Contractor's license number as evidence of Bidder's State Contractor's License or a covenant by Bidder to obtain said license within the time for acceptance of Bids;

F. Required Bidder Qualification Statement with supporting data.

## ARTICLE 3—BASIS OF BID—LUMP SUM BID AND UNIT PRICES

3.01 *Lump Sum and Unit Price Bids*

A. Bidder will perform the following Work at the indicated unit prices:

| **Lump Sum Bid Items** | | |
|---|---|---|
| **Item No.** | **Description** | **Lump Sum Bid Price** |
| A | Lump sum for All Work as described in the Contract Documents, Complete (Not including other lump sum items or unit price items) | |


**Copyright© 2018 National Society of Professional Engineers, American Council of Engineering Companies, and American Society of Civil Engineers. All rights reserved.**

| Lump Sum Bid Items | | | | | |
|---|---|---|---|---|---|
| **Item No.** | **Description** | **Lump Sum Bid Price** | | | |
| B | Huber Dryer System Package (pre-negotiated price, including dryer package and odor control system) | $6,358,121 | | | |
| **Unit Price Items** | | | | | |
| **Item No.** | **Description** | **Unit** | **Estimated Quantity** | **Bid Unit Price** | **Bid Price** |
| C | Rotating Biological Contactor (RBC) Basin Demolition, Excavation, and Disposal. | CY | 11,000 | | |
| D | Earthwork, Import Fill | TON | 5000 | | |
| E | Earthwork, Cut to Fill | CY | 6000 | | |
| F | Concrete Basin Type 1 Repair | SF | 150 | | |
| G | Concrete Basin Type 2 Repair | SF | 60 | | |
| H | Concrete Basin Crack Repair | LF | 200 | | |
| I | Concrete Sealer | SF | 3,000 | | |
| J | Calcium Aluminate (1/2" thick) | SF | 2,000 | | |
| K | Sika 224 (1/2" thick) | SF | 6,000 | | |
| L | Hollow Core Roof Plank Replacement | EA | 6 | | |
| M | Demolish Road Surface | SF | 18,100 | | |
| N | Additional Asphalt Paving | SF | 500 | | |
| O | Additional Curb and Gutter | LF | 100 | | |
| P | Additional Sidewalk | LF | 100 | | |
| Q | Solids/sludge removal from PS Basin (CLOSED TOP) | CY | 400 | | |
| R | Solids/sludge removal from WAS Basins (OPEN TOP) | CY | 600 | | |

B. Bidder acknowledges that:

1. each Bid Unit Price includes an amount considered by Bidder to be adequate to cover Contractor's overhead and profit for each separately identified item, and
2. the estimated quantities are not guaranteed, and are solely for the purpose of comparison of Bids, and final payment for all Unit Price Work will be based on actual quantities, determined as provided in the Contract Documents.


**Copyright© 2018 National Society of Professional Engineers, American Council of Engineering Companies, and American Society of Civil Engineers. All rights reserved.**

3.02 *Subtotal Bid Price (Lump Sum and Unit Prices **WITHOUT** Contingency Allowance)*

| | | |
|---|---|---|
| S | Subtotal Bid Price (Total of all Lump Sum and Unit Price Bids) | $ |
| S | Subtotal Bid Price (Total of all Lump Sum and Unit Price Bids) in words: | |

3.03 *Contingency Allowance*

| | | |
|---|---|---|
| T | Contingency Allowance | $1,400,000 |

3.04 *Total Bid Price (Lump Sum and Unit Prices **WITH** Contingency Allowance)*

| | | |
|---|---|---|
| U | Total Bid Price (Total of all Lump Sum and Unit Price Bids and Contingency Allowance) | |
| U | Total Bid Price (Total of all Lump Sum and Unit Price Bids and Contingency Allowance) in words: | |

3.05 *Bid Alternates*

A. Deductive Bid Alternates: Bidder to provide cost for deductive bid alternates listed below. These costs represent a reduction in the total bid price if these items are elected to be removed from the scope of the Work.

| **Lump Sum Deductive Bid Alternates** | | |
|---|---|---|
| **Item No.** | **Description** | **Lump Sum Bid Price** |
| A | Series 14 Work Lump Sum Bid Price and associated yard piping. Complete work as described in the Series 14 Drawings and associated yard piping from the septage receiving station to the sanitary sewer manhole. | |
| B | Series 13 foundation and structure from Column Line 2 to Column Line 1 as shown in the Series 13 Drawings. | |

3.06 *Unit Price Item Definitions*

| **Unit Price Item Definitions** | | | |
|---|---|---|---|
| **Item No.** | **Description** | **Unit** | **Definition** |
| C | Rotating Biological Contactor (RBC) Basin Demolition, Excavation, and Disposal. | CY | Rotating Biological Contactor (RBC) Basin Demolition, Excavation, and Disposal includes excavate and remove the buried concrete RBC basins. These basins were abandoned in place during the 1994 expansion. The basins are assumed to |


**Copyright© 2018 National Society of Professional Engineers, American Council of Engineering Companies, and American Society of Civil Engineers. All rights reserved.**

| Unit Price Item Definitions | | | |
|---|---|---|---|
| **Item No.** | **Description** | **Unit** | **Definition** |
| | | | contain discarded RBC media and undesirable soils. All contents of the RBCs and the complete RBC structures, plus one additional foot of soil below the RBCs must be removed and disposed. The RBCs are assumed to not contain any hazardous material. Stockpiling of waste material is not permitted. |
| D | Earthwork, Import Fill | TON | Earthwork, Import Fill includes the purchase of acceptable fill material, hauling to site, local stockpile as required, fill, and compaction to final lines and grades shown on the Drawings. |
| E | Earthwork, Cut to Fill | CY | Earthwork, Cut to Fill includes the excavation of materials onsite for local fill, local stockpile as required, fill, and compaction to final lines and grades shown on the Drawings. |
| F | Concrete Basin Type 1 Repair | SF | Concrete Basin Type 1 Repair includes type 1 repairs on the interior of the concrete PS and WAS Basins. These basins will be taken offline and cleaned by the Contractor before the Engineer performs his investigation. The results of this investigation will determine the extent of repair required. |
| G | Concrete Basin Type 2 Repair | SF | Concrete Basin Type 2 Repair includes type 1 repairs on the interior of the concrete PS and WAS Basins. These basins will be taken offline and cleaned by the Contractor before the Engineer performs his investigation. The results of this investigation will determine the extent of repair required. |
| H | Concrete Basin Crack Repair | LF | Concrete Basin Crack Repair includes repairs on the interior of the concrete PS and WAS Basins. These basins will be taken offline and cleaned by the Contractor before the Engineer performs his investigation. The results of this investigation will determine the extent of repair required. |
| I | Concrete Sealer on top of PS Basin Hollow Core Units | SF | Concrete Sealer on top of PS Basin Hollow Core Units includes sealing the top of hollow core slabs on top of the PS Basin. |
| J | PS Basins Calcium Aluminate (1/2” thick) | SF | PS Basins Calcium Aluminate (1/2” thick) includes overlay of calcium alum on the interior wall surfaces of the concrete WAS Basins. |
| K | WAS Basins Sika 224 (1/2” thick) | SF | WAS Basins Sika 224 (1/2” thick) includes overlay of Sika Repair 224 on the interior wall surfaces of the concrete WAS Basins. |
| L | PS Basin Hollow Core Roof Plank Replacement | EA | PS Basin Hollow Core Roof Plank Replacement includes removal, disposal, and complete |


**Copyright© 2018 National Society of Professional Engineers, American Council of Engineering Companies, and American Society of Civil Engineers. All rights reserved.**

| Unit Price Item Definitions | | | |
|---|---|---|---|
| **Item No.** | **Description** | **Unit** | **Definition** |
| | | | replacement of hollow-core ceiling planks on the PS Basin found to be in need of replacement as determined by the Engineer. |
| M | Demolish Road Surface | SF | Demolish Road Surface includes full removal and disposal of asphalt and concrete road surface as indicated on the Drawings. Road surface shall be removed completely to, but not including, the base course. |
| N | Additional Asphalt Paving | SF | Additional Asphalt Paving includes asphalt surfacing in addition to that which is indicated on the Drawings. This also includes base-course placement in disturbed areas and compaction. |
| O | Additional Curb and Gutter | LF | Additional Curb and Gutter includes installation of curb and gutter in addition to that which is indicated on the Drawings. |
| P | Additional Sidewalk | LF | Additional Sidewalk includes installation of sidewalk in addition to that which is indicated on the Drawings. |
| Q | Solids/sludge removal from PS Basin (CLOSED TOP) | CY | Solids/sludge removal from PS Basin includes the removal and disposal of all solids and residues from the PS Basin prior to cleaning and inspection. Contractor is responsible for all dewatering, testing to ensure waste meets all criteria (paint filter test, TCLP, and any other tests required) for disposal, and off-site disposal. Filtrate/decant from dewatering can be returned to the Henry Fork sanitary sewer. |
| R | Solids/sludge removal from WAS Basins (OPEN TOP) | CY | Solids/sludge removal from WAS Basins includes the removal and disposal of all solids and residues from the PS Basin prior to cleaning and inspection. Contractor is responsible for all dewatering, testing to ensure waste meets all criteria (paint filter test, TCLP, and any other tests required) for disposal, and off-site disposal. Filtrate/decant from dewatering can be returned to the Henry Fork sanitary sewer. |

## ARTICLE 4—TIME OF COMPLETION

4.01 Bidder agrees that the Work will be substantially complete and will be completed and ready for final payment in accordance with Paragraph 15.06 of the General Conditions on or before the dates or within the number of days indicated in the Agreement.

4.02 Bidder accepts the provisions of the Agreement as to liquidated damages.


**Copyright© 2018 National Society of Professional Engineers, American Council of Engineering Companies, and American Society of Civil Engineers. All rights reserved.**

## ARTICLE 5—BIDDER'S ACKNOWLEDGEMENTS: ACCEPTANCE PERIOD, INSTRUCTIONS, AND RECEIPT OF ADDENDA

5.01 *Bid Acceptance Period*

A. This Bid will remain subject to acceptance for 60 days after the Bid opening, or for such longer period of time that Bidder may agree to in writing upon request of Owner.

5.02 *Instructions to Bidders*

A. Bidder accepts all of the terms and conditions of the Instructions to Bidders, including without limitation those dealing with the disposition of Bid security.

5.03 *Receipt of Addenda*

A. Bidder hereby acknowledges receipt of the following Addenda:

| Addendum Number | Addendum Date |
|---|---|
| | |
| | |
| | |

## ARTICLE 6—BIDDER'S REPRESENTATIONS AND CERTIFICATIONS

6.01 *Bidder's Representations*

A. In submitting this Bid, Bidder represents the following:

1. Bidder has examined and carefully studied the Bidding Documents, including Addenda.
2. Bidder has visited the Site, conducted a thorough visual examination of the Site and adjacent areas, and become familiar with the general, local, and Site conditions that may affect cost, progress, and performance of the Work.
3. Bidder is familiar with all Laws and Regulations that may affect cost, progress, and performance of the Work.
4. Bidder has carefully studied the reports of explorations and tests of subsurface conditions at or adjacent to the Site and the drawings of physical conditions relating to existing surface or subsurface structures at the Site that have been identified in the Supplementary Conditions, with respect to the Technical Data in such reports and drawings.
5. Bidder has carefully studied the reports and drawings relating to Hazardous Environmental Conditions, if any, at or adjacent to the Site that have been identified in the Supplementary Conditions, with respect to Technical Data in such reports and drawings.
6. Bidder has considered the information known to Bidder itself; information commonly known to contractors doing business in the locality of the Site; information and observations obtained from visits to the Site; the Bidding Documents; and the Technical Data identified in the Supplementary Conditions or by definition, with respect to the effect of such information, observations, and Technical Data on (a) the cost, progress, and


**Copyright© 2018 National Society of Professional Engineers, American Council of Engineering Companies, and American Society of Civil Engineers. All rights reserved.**

performance of the Work; (b) the means, methods, techniques, sequences, and procedures of construction to be employed by Bidder, if selected as Contractor; and (c) Bidder's (Contractor's) safety precautions and programs.

7. Based on the information and observations referred to in the preceding paragraph, Bidder agrees that no further examinations, investigations, explorations, tests, studies, or data are necessary for the performance of the Work at the Contract Price, within the Contract Times, and in accordance with the other terms and conditions of the Contract.

8. Bidder is aware of the general nature of work to be performed by Owner and others at the Site that relates to the Work as indicated in the Bidding Documents.

9. Bidder has given Engineer written notice of all conflicts, errors, ambiguities, or discrepancies that Bidder has discovered in the Bidding Documents, and of discrepancies between Site conditions and the Contract Documents, and the written resolution thereof by Engineer is acceptable to Contractor.

10. The Bidding Documents are generally sufficient to indicate and convey understanding of all terms and conditions for performance and furnishing of the Work.

11. The submission of this Bid constitutes an incontrovertible representation by Bidder that without exception the Bid and all prices in the Bid are premised upon performing and furnishing the Work required by the Bidding Documents.

6.02 *Bidder's Certifications*

A. The Bidder certifies the following:

1. This Bid is genuine and not made in the interest of or on behalf of any undisclosed individual or entity and is not submitted in conformity with any collusive agreement or rules of any group, association, organization, or corporation.

2. Bidder has not directly or indirectly induced or solicited any other Bidder to submit a false or sham Bid.

3. Bidder has not solicited or induced any individual or entity to refrain from bidding.

4. Bidder has not engaged in corrupt, fraudulent, collusive, or coercive practices in competing for the Contract. For the purposes of this Paragraph 8.02.A:

a. Corrupt practice means the offering, giving, receiving, or soliciting of anything of value likely to influence the action of a public official in the bidding process.

b. Fraudulent practice means an intentional misrepresentation of facts made (a) to influence the bidding process to the detriment of Owner, (b) to establish bid prices at artificial non-competitive levels, or (c) to deprive Owner of the benefits of free and open competition.

c. Collusive practice means a scheme or arrangement between two or more Bidders, with or without the knowledge of Owner, a purpose of which is to establish bid prices at artificial, non-competitive levels.

d. Coercive practice means harming or threatening to harm, directly or indirectly, persons or their property to influence their participation in the bidding process or affect the execution of the Contract.


**Copyright© 2018 National Society of Professional Engineers, American Council of Engineering Companies, and American Society of Civil Engineers. All rights reserved.**

## ARTICLE 7—ACCEPTABLE MANUFACTURER'S LIST

7.01 Major equipment items: In connection with major items of equipment to be furnished and installed in this Project, Bidder expressly agrees to the following provisions:

A. That the Bid stated above includes the furnishing and installing of major equipment furnished by the Supplier which Bidder has selected from the Schedule of Major Equipment Suppliers and indicated by circling the selected manufacturer in the table, below; Bidder shall furnish major equipment indicated by circling in the schedule of Major Equipment Suppliers found below.

B. That the installed price of the equipment includes the cost (if any) of changes in the structure, buildings, piping, wiring, accessories, etc., necessary to accommodate the particular equipment proposed.

| SPEC SECTION | EQUIPMENT NAME | LISTED MANUFACTURERS |
|---|---|---|
| 13 34 19 | Metal building systems | 1. Butler Manufacturing.<br>2. Ceco Building Systems.<br>3. NCI Building Systems.<br>4. Nucor Building Systems.<br>5. Star Building Systems.<br>6. Varco Pruden. |
| | Insulation: Fiberglass batt or blanket | 1. Certainteed.<br>2. Johns Mansville.<br>3. Owens-Corning Fiberglass Corp.<br>4. United States Gypsum Company (USG). |
| | Insulation: Rigid extruded polystyrene board | 1. Dow Building Solutions.<br>2. Owens Corning.<br>3. VC Industries.<br>4. Johns Mansville. |
| 23 80 00 | HVAC Equipment | |
| | Vibration isolation assemblies | 1. Mason.<br>2. Vibration Mounting and Controls Co.<br>3. Vibro-Accoustics. |
| | Corrosion-protective coatings: | 1. Heresite and Chemical Co.<br>2. Aero-Marine Engineering, Inc.<br>3. Luvata ElectroFin. |
| | Heating and cooling coils - water - steam | 1. Carrier.<br>2. Trane.<br>3. Daikin Applied.<br>4. AAON. |
| | Heating coil - electric | 1. Greenheck.<br>2. Carrier.<br>3. Daikin Applied.<br>4. AAON. |
| | Fan coils | 1. Carrier.<br>2. Daikin Applied.<br>3. Mitsubishi. |
| | Furnaces - gas | 1. Carrier.<br>2. Trane. |


**Copyright© 2018 National Society of Professional Engineers, American Council of Engineering Companies, and American Society of Civil Engineers. All rights reserved.**

| SPEC SECTION | EQUIPMENT NAME | LISTED MANUFACTURERS |
|---|---|---|
| | Unit heater – gas | 1. Hastings.<br>2. Modine Manufacturing Co. |
| | Make-up air units – direct fired, gas | 1. Greenheck.<br>2. Hastings.<br>3. Titan.<br>4. AAON. |
| | Make-up air units, electric: | 1. Greenheck<br>2. Hastings.<br>3. Daikin Applied.<br>4. AAON.<br>5. Carrier. |
| | Air-cooled condensing units - split system | 1. Carrier.<br>2. Trane.<br>3. Daikin Applied.<br>4. AAON. |
| | Air-cooled heat pumps - split system | 1. Daikin Applied.<br>2. Mithsubishi.<br>3. Carrier. |
| | Packaged air-handling units: | 1. Daikin Applied.<br>2. Bard.<br>3. AAON.<br>4. Carrier. |
| | Positive pressurized unit | 1. Purafil. |
| 26 24 13 | Switchboards | 1. Eaton.<br>2. Square D by Schneider Electric.<br>3. Siemens Corporation. |
| 26 24 16 | Panelboards | 1. Eaton.<br>2. Square D by Schneider Electric.<br>3. Siemens Corporation |
| 26 24 19 | Motor Control Equipment | 1. Allen-Bradley by Rockwell Automation, Inc.<br>2. c3controls.<br>3. Eaton.<br>4. Square D by Schneider Electric.<br>5. Siemens Corporation. |
| 26 29 23 | Variable Frequency Drives – Low Voltage | 1. Allen Bradley.<br>2. ASEA Brown Bovari (ABB).<br>3. Eaton.<br>4. Danfoss.<br>5. General Electric Company.<br>6. Siemens.<br>7. Square D Company.<br>8. Toshiba.<br>9. Yaskawa. |


**Copyright© 2018 National Society of Professional Engineers, American Council of Engineering Companies, and American Society of Civil Engineers. All rights reserved.**

| SPEC SECTION | EQUIPMENT NAME | LISTED MANUFACTURERS |
|---|---|---|
| 26 32 14 | Engine Generator - Diesel | 1. Caterpillar.<br>2. Cummins.<br>3. Generac.<br>4. Kohler.<br>5. Taylor Power Systems.<br>6. Waukesha.<br>7. MTU. |
| | Silencers | 1. Maxim.<br>2. GT Exhaust Systems.<br>3. Nelson.<br>4. Cowl.<br>5. Hapco. |
| 33 12 19 | Fire Hydrant | 1. Mueller Centurion<br>2. Kennedy Valve K-81.<br>3. American Flow Control – American-Darling Mark 73. |
| 40 05 52 | Air Release Valves | 1. APCO<br>2. GA Industries |
| | Pressure-Reducing Valves (2 In And Smaller) | 1. Fisher, Type 75A.<br>2. Watts Series 25AUB-Z3. |
| | Solenoid Valves | 1. ASCO |
| | Pinch Valves | 1. Red Valve.<br>2. Flexible Valve Corp. |
| 40 05 61 | Resilient Wedge Gate Valves, 2 to 48 IN (Water, Wastewater Application) | 1. Clow.<br>2. Kennedy.<br>3. Mueller.<br>4. American Flow Control.<br>5. M & H. |
| | Knife Gate Valves, 2 to 36 IN (Wastewater Sludge Application) | 1. DeZurik, Series L.<br>2. Fabri-Valve |
| 40 05 62 | Non-Lubricated Eccentric Plug Valves (Sewage, Sludge, Sewage Gas Applications) | 1. DeZurik.<br>2. Kennedy.<br>3. ValMatic.<br>4. Victaulic. |
| 40 05 63 | Metallic Ball Valves 1/4 to 3 in Dia | 1. Apollo.<br>2. Jamesbury.<br>3. Watts.<br>4. Stockham.<br>5. Nibco. |
| | Plastic Ball Valves: 1/2 in to 4 in dia | 1. Chemtrol/NIBCO.<br>2. Heyward.<br>3. Spears.<br>4. ASAHI/America. |


**Copyright© 2018 National Society of Professional Engineers, American Council of Engineering Companies, and American Society of Civil Engineers. All rights reserved.**

| SPEC SECTION | EQUIPMENT NAME | LISTED MANUFACTURERS |
|---|---|---|
| 40 05 64 | Butterfly Valves | 1. DeZurik.<br>2. Clow.<br>3. Mueller/Lineseal.<br>4. Bray.<br>5. Pentair/Keystone. |
| 40 05 66 | Swing Check Valves: 3 IN To 24 IN | 1. Clow.<br>2. American Darling.<br>3. Kennedy. |
| 40 63 43 | Programmable Logic Controllers | 1. Rockwell Automation: Allen-Bradley, ControlLogix. |
| 40 71 00 | Flow Instrumentation | 1. ABB (WaterMaster).<br>2. Endress + Hauser (ProMag).<br>3. Krohne (OPTIFLUX).<br>4. Rosemount (8700 Series).<br>5. Siemens (SITRANS F M). |
| 41 12 12 | Tubular drag conveyor | 1. Hapman |
| 41 12 13 | Shafted screw conveyors | 1. Custom Conveyor Corporation.<br>2. Jim Myers and Sons.<br>3. Thomas Conveyor Corporation.<br>4. WAMGROUP.<br>5. KWS Environmental. |
| 41 12 14 | Shaftless screw conveyors | 1. Jim Myers & Sons - JMS Equipment<br>2. KWS Environmental<br>3. Spirac, Inc. |
| 41 22 23 | Hoists: | 1. Yale.<br>2. Acco.<br>3. Robbins and Myers.<br>4. Wright |
| | Trolleys: | 1. Yale.<br>2. Acco.<br>3. Wright. |
| | Monorails: | 1. Spanmaster.<br>2. Twin City Monorail |
| 43 21 00 | Mechanical seals | 1. AES.<br>2. Chesterton. |
| 43 23 15 | Self-priming centrifugal pumps | 1. Gorman Rupp. |
| 43 23 57 | Progressing cavity pumps | 2. Moyno.<br>3. Netsch. |
| 43 23 58 | Rotary Lobe Pumps | 1. Boerger.<br>2. Netzsch. |
| 43 24 16 | Sump Pumps | 1. Flygt.<br>2. KSB.<br>3. ASB.<br>4. Hydromatic. |
| 43 41 43 | Polyethylene chemical tanks | 1. Poly Processing Company.<br>2. Snyder Industries, Inc. |


**Copyright© 2018 National Society of Professional Engineers, American Council of Engineering Companies, and American Society of Civil Engineers. All rights reserved.**

| SPEC SECTION | EQUIPMENT NAME | LISTED MANUFACTURERS |
|---|---|---|
| 44 32 11 | Wet chemical packed tower odor control equipment | 1. BioAir. |
| 46 21 10 | Septage Receiving Station | 1. Lakeside Equipment Corporation.<br>2. Huber.<br>3. Enviro-Care/SAVECO. |
| 46 22 00 | Cake storage Bin - Pre-dewatered Cake Storage Hopper with Live-Bottom Screws | 1. Custom Conveyor Corporation.<br>2. Jim Myers and Sons.<br>3. KWS Environmental.<br>4. Spirac.<br>5. WAMGROUP. |
| 46 24 23 | Sludge grinders | 1. Disposable Waste System, Inc. (Muffin Monster).<br>2. Netzch.<br>3. Moyno.<br>4. Franklin Miller. |
| 46 33 33 | Liquid polymer feeders | 1. VeloDyne<br>2. Prominent<br>3. Fluid Dynamics |
| 46 36 10 | Biosolids Belt Drying System Supplier | 1. Huber. |
| 46 41 00 | Vertical Mixers | 1. Mixing Equipment Co., Inc. (Lightning).<br>2. Philadelphia Mixers. |
| 46 71 16 | Gravity Belt Thickeners | 1. Andritz.<br>2. Alfa Laval.<br>3. Komline Sanderson.<br>4. Charter Machine Company.<br>5. BDP. |
| 46 76 21 | Belt Filter Presses | 1. Andritz.<br>2. BDP.<br>3. Charter Machine Company.<br>4. Komline Sanderson. |

## ARTICLE 8—SCHEDULE OF SUBCONTRACTORS

| **Subcontractor Name and Address** | **Description of Work/Materials** |
|---|---|
| | Plumbing (Required by NC General Statute 143-128) |
| | HVAC (Required by NC General Statute 143-128) |
| | Electrical (Required by NC General Statute 143-128) |


**Copyright© 2018 National Society of Professional Engineers, American Council of Engineering Companies, and American Society of Civil Engineers. All rights reserved.**

| Subcontractor Name and Address | Description of Work/Materials |
|---|---|
| | General (Required by NC General Statute 143-128) |
| | Paving |
| | Hauling |
| | Landscaping |
| | Demolition |
| | Site Work |
| | Concrete |
| | Masonry |
| | Roofing |
| | Painting |
| | Other |
| | Other |
| | Other |
| | Other |


Copyright© 2018 National Society of Professional Engineers, American Council of Engineering Companies, and American Society of Civil Engineers. All rights reserved.

| **Subcontractor Name and Address** | **Description of Work/Materials** |
|---|---|
| | Other |
| | Other |
| | Other |
| | Other |
| | Other |


**Copyright© 2018 National Society of Professional Engineers, American Council of Engineering Companies, and American Society of Civil Engineers. All rights reserved.**

BIDDER hereby submits this Bid as set forth above:

Bidder:

_____

*(typed or printed name of organization)*

By: _____

*(individual's signature)*

Name: _____

*(typed or printed)*

Title: _____

*(typed or printed)*

Date: _____

*(typed or printed)*

*If Bidder is a corporation, a partnership, or a joint venture, attach evidence of authority to sign.*

Attest: _____

*(individual's signature)*

Name: _____

*(typed or printed)*

Title: _____

*(typed or printed)*

Date: _____

*(typed or printed)*

Bidder's Address for giving notices:

_____

_____

Bidder's Contact Person:

Name: _____

*(typed or printed)*

Title: _____

*(typed or printed)*

Phone: _____

Email: _____

Address:

_____

_____

_____

Bidder's Contractor License No.: (if applicable) _____


**Copyright© 2018 National Society of Professional Engineers, American Council of Engineering Companies, and American Society of Civil Engineers. All rights reserved.**

# QUALIFICATIONS STATEMENT

## ARTICLE 1—GENERAL INFORMATION

1.01 Provide contact information for the Business:

| | | | |
|---|---|---|---|
| Legal Name of Business: | | | |
| Corporate Office | | | |
| Name: | | Phone number: | |
| Title: | | Email address: | |
| Business address of corporate office: | | | |
| | | | |
| | | | |
| Local Office | | | |
| Name: | | Phone number: | |
| Title: | | Email address: | |
| Business address of local office: | | | |
| | | | |
| | | | |

1.02 Provide information on the Business's organizational structure:

| | | | |
|---|---|---|---|
| Form of Business: | ☐ Sole Proprietorship ☐ Partnership ☐ Corporation | | |
| ☐ Limited Liability Company ☐ Joint Venture comprised of the following companies: | | | |
| | 1. | | |
| | 2. | | |
| | 3. | | |
| Provide a separate Qualification Statement for each Joint Venturer. | | | |
| Date Business was formed: | | State in which Business was formed: | |
| Is this Business authorized to operate in the Project location? | | ☐ Yes ☐ No ☐ Pending | |

1.03 Identify all businesses that own Business in whole or in part (25% or greater), or that are wholly or partly (25% or greater) owned by Business:

| | | | |
|---|---|---|---|
| Name of business: | | Affiliation: | |
| Address: | | | |
| Name of business: | | Affiliation: | |
| Address: | | | |
| Name of business: | | Affiliation: | |

| Address: | |
|---|---|

1.04 Provide information regarding the Business's officers, partners, and limits of authority.

| Name: | | Title: | |
|---|---|---|---|
| Authorized to sign contracts: ☐ Yes ☐ No | | Limit of Authority: | $ |
| Name: | | Title: | |
| Authorized to sign contracts: ☐ Yes ☐ No | | Limit of Authority: | $ |
| Name: | | Title: | |
| Authorized to sign contracts: ☐ Yes ☐ No | | Limit of Authority: | $ |
| Name: | | Title: | |

## ARTICLE 2—LICENSING

2.01 Provide information regarding licensure for Business:

| Name of License: | | | |
|---|---|---|---|
| Licensing Agency: | | | |
| License No: | | Expiration Date: | |
| Name of License: | | | |
| Licensing Agency: | | | |
| License No: | | Expiration Date: | |

## ARTICLE 3—DIVERSE BUSINESS CERTIFICATIONS

3.01 Provide information regarding Business's Diverse Business Certification, if any. Provide evidence of current certification.

| Certification | | Certifying Agency | Certification Date |
|---|---|---|---|
| ☐ Disadvantaged Business Enterprise | | | |
| ☐ Minority Business Enterprise | | | |
| ☐ Woman-Owned Business Enterprise | | | |
| ☐ Small Business Enterprise | | | |
| ☐ Disabled Business Enterprise | | | |
| ☐ Veteran-Owned Business Enterprise | | | |
| ☐ Service-Disabled Veteran-Owned Business | | | |
| ☐ HUBZone Business (Historically Underutilized) Business | | | |
| ☐ Other | | | |
| ☐ None | | | |

## ARTICLE 4—SAFETY

4.01 Provide information regarding Business's safety organization and safety performance.

| Name of Business's Safety Officer: | | |
|---|---|---|
| Safety Certifications | | |
| Certification Name | Issuing Agency | Expiration |
| | | |
| | | |

4.02 Provide Worker's Compensation Insurance Experience Modification Rate (EMR), Total Recordable Frequency Rate (TRFR) for incidents, and Total Number of Recorded Manhours (MH) for the last 3 years and the EMR, TRFR, and MH history for the last 3 years of any proposed Subcontractor(s) that will provide Work valued at 10% or more of the Contract Price. Provide documentation of the EMR history for Business and Subcontractor(s).

| Year | | | | | | | | | |
|---|---|---|---|---|---|---|---|---|---|
| Company | EMR | TRFR | MH | EMR | TRFR | MH | EMR | TRFR | MH |
| | | | | | | | | | |
| | | | | | | | | | |

## ARTICLE 5—FINANCIAL

5.01 Provide information regarding the Business's financial stability. Provide the most recent audited financial statement, and if such audited financial statement is not current, also provide the most current financial statement.

| Financial Institution: | | |
|---|---|---|
| Business address: | | |
| Date of Business's most recent financial statement: | | ☐ Attached |
| Date of Business's most recent audited financial statement: | | ☐ Attached |
| Financial indicators from the most recent financial statement | | |
| Contractor's Current Ratio (Current Assets ÷ Current Liabilities) | | |
| Contractor's Quick Ratio ((Cash and Cash Equivalents + Accounts Receivable + Short Term Investments) ÷ Current Liabilities) | | |

## ARTICLE 6—SURETY INFORMATION

6.01 Provide information regarding the surety company that will issue required bonds on behalf of the Business, including but not limited to performance and payment bonds.

| Surety Name: | |
|---|---|
| Surety is a corporation organized and existing under the laws of the state of: | |

| | | | |
|---|---|---|---|
| Is surety authorized to provide surety bonds in the Project location? | | ☐ Yes ☐ No | |
| Is surety listed in "Companies Holding Certificates of Authority as Acceptable Sureties on Federal Bonds and as Acceptable Reinsuring Companies" published in Department Circular 570 (as amended) by the Bureau of the Fiscal Service, U.S. Department of the Treasury?<br>☐ Yes ☐ No | | | |
| Mailing Address<br>(principal place of business): | | | |
| | | | |
| | | | |
| Physical Address<br>(principal place of business): | | | |
| | | | |
| | | | |
| Phone (main): | | Phone (claims): | |

**ARTICLE 7—INSURANCE**

7.01 Provide information regarding Business's insurance company(s), including but not limited to its Commercial General Liability carrier. Provide information for each provider.

| | | | |
|---|---|---|---|
| Name of insurance provider, and type of policy (CLE, auto, etc.): | | | |
| Insurance Provider | | Type of Policy (Coverage Provided) | |
| | | | |
| | | | |
| | | | |
| | | | |
| Are providers licensed or authorized to issue policies in the Project location? | | | ☐ Yes ☐ No |
| Does provider have an A.M. Best Rating of A-VII or better? | | | ☐ Yes ☐ No |
| Mailing Address<br>(principal place of business): | | | |
| | | | |
| | | | |
| Physical Address<br>(principal place of business): | | | |
| | | | |
| | | | |
| Phone (main): | | Phone (claims): | |

## ARTICLE 8—CONSTRUCTION EXPERIENCE

8.01 Provide information that will identify the overall size and capacity of the Business.

| | |
|---|---|
| Average number of current full-time employees: | |
| Estimate of revenue for the current year: | |
| Estimate of revenue for the previous year: | |

8.02 Provide information regarding the Business's previous contracting experience.

| | | | | |
|---|---|---|---|---|
| Years of experience with projects like the proposed project: | | | | |
| As a general contractor: | | As a joint venturer: | | |
| Has Business, or a predecessor in interest, or an affiliate identified in Paragraph 1.03: | | | | |
| Been disqualified as a bidder by any local, state, or federal agency within the last 5 years? ☐ Yes ☐ No | | | | |
| Been barred from contracting by any local, state, or federal agency within the last 5 years? ☐ Yes ☐ No | | | | |
| Been released from a bid in the past 5 years? ☐ Yes ☐ No | | | | |
| Defaulted on a project or failed to complete any contract awarded to it? ☐ Yes ☐ No | | | | |
| Refused to construct or refused to provide materials defined in the contract documents or in a change order? ☐ Yes ☐ No | | | | |
| Been a party to any currently pending litigation or arbitration? ☐ Yes ☐ No | | | | |
| Provide full details in a separate attachment if the response to any of these questions is Yes. | | | | |

8.03 List all projects currently under contract in Schedule A and provide indicated information.

8.04 List a minimum of three and a maximum of six projects completed in the last 5 years in Schedule B and provide indicated information to demonstrate the Business's experience with projects similar in type and cost of construction.

8.05 In Schedule C, provide information on key individuals whom Business intends to assign to the Project. Provide resumes for those individuals included in Schedule C. Key individuals include the Project Manager, Project Superintendent, Quality Manager, and Safety Manager. Resumes may be provided for Business's key leaders as well.

## ARTICLE 9—REQUIRED ATTACHMENTS

9.01 Provide the following information with the Statement of Qualifications:

A. If Business is a Joint Venture, separate Qualifications Statements for each Joint Venturer, as required in Paragraph 1.02.
B. Diverse Business Certifications if required by Paragraph 3.01.
C. Certification of Business's safety performance if required by Paragraph 4.02.
D. Financial statements as required by Paragraph 5.01.
E. Attachments providing additional information as required by Paragraph 8.02.
F. Schedule A (Current Projects) as required by Paragraph 8.03.
G. Schedule B (Previous Experience with Similar Projects) as required by Paragraph 8.04.
H. Schedule C (Key Individuals) and resumes for the key individuals listed, as required by Paragraph 8.05.
I. Additional items as pertinent.

This Statement of Qualifications is offered by:

Business: _____
*(typed or printed name of organization)*

By: _____
*(individual's signature)*

Name: _____
*(typed or printed)*

Title: _____
*(typed or printed)*

Date: _____
*(date signed)*

*(If Business is a corporation, a partnership, or a joint venture, attach evidence of authority to sign.)*

Attest: _____
*(individual's signature)*

Name: _____
*(typed or printed)*

Title: _____
*(typed or printed)*

Address for giving notices:

_____

_____

_____

Designated Representative:

Name: _____
*(typed or printed)*

Title: _____
*(typed or printed)*

Address:

_____

_____

_____

Phone: _____

Email: _____

**Schedule A—Current Projects**

| | | | | | |
|---|---|---|---|---|---|
| Name of Organization | | | | | |
| Project Owner | | | Project Name | | |
| General Description of Project | | | | | |
| Project Cost | | | Date Project Completed | | |
| Key Project Personnel | Project Manager | Project Superintendent | Safety Manager | Quality Control Manager | |
| Name | | | | | |
| Reference Contact Information (listing names indicates approval to contacting the names individuals as a reference) | | | | | |
| | Name | Title/Position | Organization | Telephone | Email |
| Owner | | | | | |
| Designer | | | | | |
| Construction Manager | | | | | |
| | | | | | |
| Project Owner | | | Project Name | | |
| General Description of Project | | | | | |
| Project Cost | | | Date Project Completed | | |
| Key Project Personnel | Project Manager | Project Superintendent | Safety Manager | Quality Control Manager | |
| Name | | | | | |
| Reference Contact Information (listing names indicates approval to contacting the names individuals as a reference) | | | | | |
| | Name | Title/Position | Organization | Telephone | Email |
| Owner | | | | | |
| Designer | | | | | |
| Construction Manager | | | | | |
| | | | | | |
| Project Owner | | | Project Name | | |
| General Description of Project | | | | | |
| Project Cost | | | Date Project Completed | | |
| Key Project Personnel | Project Manager | Project Superintendent | Safety Manager | Quality Control Manager | |
| Name | | | | | |
| Reference Contact Information (listing names indicates approval to contacting the names individuals as a reference) | | | | | |
| | Name | Title/Position | Organization | Telephone | Email |
| Owner | | | | | |
| Designer | | | | | |
| Construction Manager | | | | | |

**Schedule B—Previous Experience with Similar Projects**

| | | | | | |
|---|---|---|---|---|---|
| Name of Organization | | | | | |
| Project Owner | | | Project Name | | |
| General Description of Project | | | | | |
| Project Cost | | | Date Project Completed | | |
| Key Project Personnel | Project Manager | Project Superintendent | Safety Manager | Quality Control Manager | |
| Name | | | | | |
| Reference Contact Information (listing names indicates approval to contacting the names individuals as a reference) | | | | | |
| | Name | Title/Position | Organization | Telephone | Email |
| Owner | | | | | |
| Designer | | | | | |
| Construction Manager | | | | | |
| | | | | | |
| Project Owner | | | Project Name | | |
| General Description of Project | | | | | |
| Project Cost | | | Date Project Completed | | |
| Key Project Personnel | Project Manager | Project Superintendent | Safety Manager | Quality Control Manager | |
| Name | | | | | |
| Reference Contact Information (listing names indicates approval to contacting the names individuals as a reference) | | | | | |
| | Name | Title/Position | Organization | Telephone | Email |
| Owner | | | | | |
| Designer | | | | | |
| Construction Manager | | | | | |
| | | | | | |
| Project Owner | | | Project Name | | |
| General Description of Project | | | | | |
| Project Cost | | | Date Project Completed | | |
| Key Project Personnel | Project Manager | Project Superintendent | Safety Manager | Quality Control Manager | |
| Name | | | | | |
| Reference Contact Information (listing names indicates approval to contacting the names individuals as a reference) | | | | | |
| | Name | Title/Position | Organization | Telephone | Email |
| Owner | | | | | |
| Designer | | | | | |
| Construction Manager | | | | | |

**Schedule B—Previous Experience with Similar Projects**

| | | | | | |
|---|---|---|---|---|---|
| Name of Organization | | | | | |
| Project Owner | | | Project Name | | |
| General Description of Project | | | | | |
| Project Cost | | | Date Project Completed | | |
| Key Project Personnel | Project Manager | Project Superintendent | Safety Manager | Quality Control Manager | |
| Name | | | | | |
| Reference Contact Information (listing names indicates approval to contacting the names individuals as a reference) | | | | | |
| | Name | Title/Position | Organization | Telephone | Email |
| Owner | | | | | |
| Designer | | | | | |
| Construction Manager | | | | | |
| | | | | | |
| Project Owner | | | Project Name | | |
| General Description of Project | | | | | |
| Project Cost | | | Date Project Completed | | |
| Key Project Personnel | Project Manager | Project Superintendent | Safety Manager | Quality Control Manager | |
| Name | | | | | |
| Reference Contact Information (listing names indicates approval to contacting the names individuals as a reference) | | | | | |
| | Name | Title/Position | Organization | Telephone | Email |
| Owner | | | | | |
| Designer | | | | | |
| Construction Manager | | | | | |
| | | | | | |
| Project Owner | | | Project Name | | |
| General Description of Project | | | | | |
| Project Cost | | | Date Project Completed | | |
| Key Project Personnel | Project Manager | Project Superintendent | Safety Manager | Quality Control Manager | |
| Name | | | | | |
| Reference Contact Information (listing names indicates approval to contacting the names individuals as a reference) | | | | | |
| | Name | Title/Position | Organization | Telephone | Email |
| Owner | | | | | |
| Designer | | | | | |
| Construction Manager | | | | | |

## Schedule C—Key Individuals

| **Project Manager** | | | |
|---|---|---|---|
| Name of individual | | | |
| Years of experience as project manager | | | |
| Years of experience with this organization | | | |
| Number of similar projects as project manager | | | |
| Number of similar projects in other positions | | | |
| Current Project Assignments | | | |
| Name of assignment | | Percent of time used for this project | Estimated project completion date |
| | | | |
| | | | |
| Reference Contact Information (listing names indicates approval to contact named individuals as a reference) | | | |
| Name | | Name | |
| Title/Position | | Title/Position | |
| Organization | | Organization | |
| Telephone | | Telephone | |
| Email | | Email | |
| Project | | Project | |
| Candidate's role on project | | Candidate's role on project | |

| **Project Superintendent** | | | |
|---|---|---|---|
| Name of individual | | | |
| Years of experience as project superintendent | | | |
| Years of experience with this organization | | | |
| Number of similar projects as project superintendent | | | |
| Number of similar projects in other positions | | | |
| Current Project Assignments | | | |
| Name of assignment | | Percent of time used for this project | Estimated project completion date |
| | | | |
| | | | |
| Reference Contact Information (listing names indicates approval to contact named individuals as a reference) | | | |
| Name | | Name | |
| Title/Position | | Title/Position | |
| Organization | | Organization | |
| Telephone | | Telephone | |
| Email | | Email | |
| Project | | Project | |
| Candidate's role on project | | Candidate's role on project | |

| **Safety Manager** | | | |
|---|---|---|---|
| Name of individual | | | |
| Years of experience as project manager | | | |
| Years of experience with this organization | | | |
| Number of similar projects as project manager | | | |
| Number of similar projects in other positions | | | |
| Current Project Assignments | | | |
| Name of assignment | | Percent of time used for this project | Estimated project completion date |
| | | | |
| | | | |
| Reference Contact Information (listing names indicates approval to contact named individuals as a reference) | | | |
| Name | | Name | |
| Title/Position | | Title/Position | |
| Organization | | Organization | |
| Telephone | | Telephone | |
| Email | | Email | |
| Project | | Project | |
| Candidate's role on project | | Candidate's role on project | |
| **Quality Control Manager** | | | |
| Name of individual | | | |
| Years of experience as project superintendent | | | |
| Years of experience with this organization | | | |
| Number of similar projects as project superintendent | | | |
| Number of similar projects in other positions | | | |
| Current Project Assignments | | | |
| Name of assignment | | Percent of time used for this project | Estimated project completion date |
| | | | |
| | | | |
| Reference Contact Information (listing names indicates approval to contact named individuals as a reference) | | | |
| Name | | Name | |
| Title/Position | | Title/Position | |
| Organization | | Organization | |
| Telephone | | Telephone | |
| Email | | Email | |
| Project | | Project | |
| Candidate's role on project | | Candidate's role on project | |

# Proposal

Project Name:
Hickory, NC

Equipment Type:
BT 26 205°F
96°C

Proposal Date:
11/12/2021

Proposal Number:
449537 REV 3

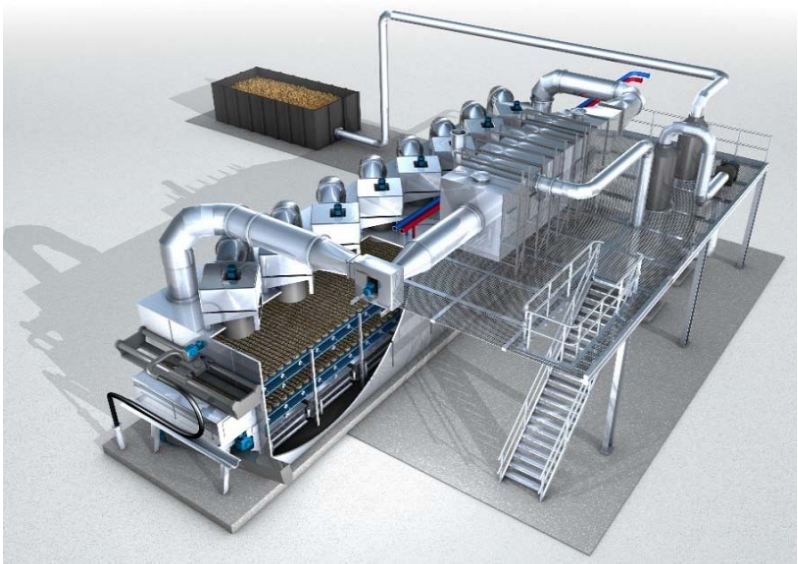

HUBER Contact:
Zach Adreon
Applications Engineer - Dryer Products
704-430-7796
Zachary.Adreon@hhusa.net

Represented by:
Rob Kelley
Premier Water
(704) 907-5474
rob@premier-water.com

**Huber Technology, Inc.**

**1009 Airlie Parkway**

**Denver, NC 28037**

**Phone: (704) 949-1010**
**Fax: (704) 949-1020**

# Guaranteed Performance and Utility Requirements

Hickory, NC November 12, 2021

**Sludge Characteristics for Performance Guarantee:**

| | | |
|---|---|---|
| Digestion Process: | None | (Per 46, 36, 10, 1.6) |
| Sludge Type: | Blended - Non-Digested | (Per 46, 36, 10, 1.6) |
| Primary: | 35% (dry mass) | (Per 46, 36, 10, 1.6) |
| Secondary | 65% (dry mass) | (Per 46, 36, 10, 1.6) |
| Scum | % Unknown | (Per 46, 36, 10, 1.3) |
| Industrial | % Unknown | (Per 46, 36, 10, 1.3) |
| FOG | % Unknown | (Per 46, 36, 10, 1.3) |
| Sludge VS: | <75% | (empirical assumption) |
| | 68-69% | (April 2020 Testing[1]) |
| Sludge Protein Content: | 35% as related to overall DS | (empirical assumption) |
| | 34% | (April 2020 Testing[1]) |
| Sludge pH: | 6.5-7.5 | (empirical assumption) |
| | 6.9 | (April 2020 Testing[1]) |
| Cake Density: | 45-65lb/cuft | (Per 46, 36, 10) |
| Consistency: | Non-thixotropic | (empirical assumption) |
| | Dewatered to 90% of max. dewater-ability[1] | (empirical assumption) |
| | 24% from Cake Sample | (April 2020 Testing[1]) |
| | >22% from dewater thin sludge sample | (April 2020 Testing[1]) |
| | Max 2% cake variation per hour | (Per 46, 36, 10, 1.6) |
| | Less than 15% industrial (by mass) | (empirical assumption) |
| | Maximum particle size 5/16" | (empirical assumption) |
| Dewatering Polymer Consumption: | 10-30 lb active polymer/dry ton of sludge | (empirical assumption) |
| | 18-22 lb active polymer/dry ton of sludge | (April 2020 Testing[1]) |
| Cake Pumping Distance: | Less than 50ft with a maximum of 4 bends | (empirical assumption) |
| Cake Storage Time: | Less than 8hr (due to high primary load) | (empirical assumption) |
| Dried Sludge Density | 25 lb/cuft | (empirical assumption) |

[1] - Data listed from the April 2020 Testing combines data gather from a thin sludge dewatering bench test and dryer bench test completed in April 2020.

[2] - Maximum dewaterability determination, if required, will be assessed based on the acceptable equipment dewaterability reported by the independent laboratory, KB Kopp.

**Project Design Parameters**

| | | |
|---|---|---|
| Sludge Feed Rate: | 21,467 wet ton/yr | (calculated) |
| | 64.4 wet ton/day | (Per 46, 36, 10, 1.6) |
| | 4,067 dry ton/yr | (calculated) |
| | 12.2 dry ton/day | (Per 46, 36, 10, 1.6) |
| Inlet Cake Concentration: | 19% (Design, 16-28% Range) | (Per 46, 36, 10, 1.6) |
| Operational Schedule: | 7 days/week, 24 hr/day | (Per 46, 36, 10, 1.6) |
| Maximum Operational Hours: | 8000 hr/yr | (calculated) |
| Calculated Sludge Loading Rate: | 1,020 dry lb/hr at 19% feed | (calculated) |
| | 5,369 wet lb/hr at 19% feed | (calculated) |

| **Equipment Recommendation:** | | **Air Flow Design:** |
|---|---|---|
| Recommended unit model: | HUBER Dryer BT 26 | Fresh Air System |
| Recommended unit quantity: | 1 | |

Project Design Calculations:

| | | |
|---|---|---|
| Estimated Dry Cake Solids Out: | 92% (Average, 90-94% range) | (Per 46, 36, 10, 1.6) |
| Solids Loading Rate Out: | 4,432 wet ton/yr | (calculated) |
| | 13.3 wet ton/day at 92% | (Per 46, 36, 10, 1.6) |
| | 1,108 lb/hr at 92% | (Per 46, 36, 10, 1.6) |
| | 0.74 cuft/min | (calculated) |
| Max Annual Water Evaporation Requirement: | 21,070 ton water/year | (calculated) |
| Hourly Water Evaporation Requirement: | 4,261 lb/hr | (Per 46, 36, 10, 1.6) |
| Final Product Discharge Temperature: | max 100°F (at discharge of HUBER screw conveyor) | |
| Final Product Discharge Density: | 25lb/ft$^3$ | (assumed) |

HUBER plans to meet 40 CFR Part 503 by PFRP Process 3 - Heat Drying to reduce the moisture content of the Biosolids to 10% or lower and the temperature of the biosolids exceeding 80°C. As the product is dried to 90% it also meets vector attraction reduction option 8.

Dryer Conveyance Equipment designed based on 25lb/ft$^3$ discharge density.

Equipment Design Parameters:

| | | | |
|---|---|---|---|
| Thermal Heat Source: | Natural Gas Boiler System | | |
| Hot Water Flow: | 433GPM | | (calculated) |
| Estimated Heat Supply Temperature: | 205°F | 96°C | (calculated) |
| Estimated Heat Return Temperature: | 178°F | 81°C | |

* - Performance is based on sludge designed to the bid specification and assumptions listed above.

Equipment Requirements:

| | | |
|---|---|---|
| Heat Demand Dryer: | 1,297 Btu/lb water evaporated | (calculated) |
| | | |
| Heat Demand Boiler: | 1550 BTU/lb of water evaporated | (Per 46, 36, 10, 1.6) |
| Efficiency: | 83.7% | (calculated) |
| Input: | 6.60 MMBTU/hr | (calculated) |
| Est. Required Pressure: | 10 psig | |
| Gas Usage | 6,952 CF/hr | |
| Assuming | 950 BTU/CF (LHV) | (Per 46, 36, 10, 1.6) |
| | 1CF at 14.73PSIA and 60°F | (Per 46, 36, 10, 1.5, I,1) |
| | | |
| Electrical Demand: | 0.021 kWh/lb water evaporated | (calculated) |
| Electrical Consumption: | 91 kWh/h | (calculated) |
| Installed Power | 118kW | (calculated) |

*Electrical usage is for the dryer only, not including ancillary equipment

| | | |
|---|---|---|
| Estimated Exhaust Air Flow: | 14,715 CFM | (calculated) |
| | Est. 154°F | (calculated) |

Estimated Wastewater Flow: 1.0-8.4GPM overflow from Scrubber System
Note: Flow increases with temperature.
1.0GPM estimated a 205°F temperature

Estimated Water Demand During Operation:

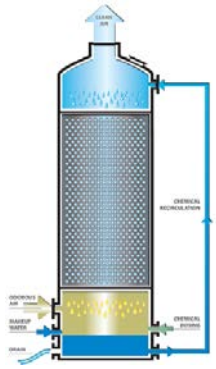

Scrubber Vessel

Scrubber Makeup Water
1.0-10 GPM of Plant Effluent
35 psi
Notes:
[1] Values are estimated based on information provided.
[2] Plant Effluent can be used if the chemical parameters meet the specification of the scrubber supplier.
[3] Flow is expected to increase as temperature increases.

Scrubber Cooling Water for Acid Stage at maximum 230°F:
~3.3MMBTU/hr Cooling Water Required
363 GPM of Plant Effluent (Estimated)

| | | |
|---|---|---|
| Supply Temp: | 85°F | (assumed maximum) |
| Return Temperature: | 104°F | |

Notes:
[1] Cooling water does not have to be treated.
[2] Flow is expected to be lower at lower supply temperatures.
[3] Cooling is only required above ≈220°F drying temp.

Estimated Water Demand for Safety Systems:

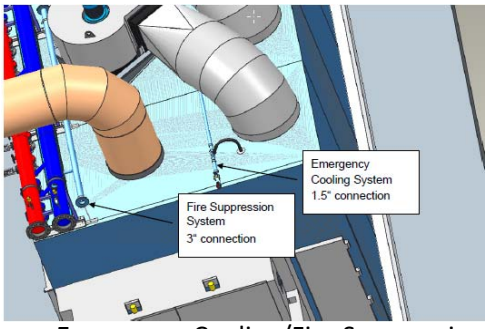

Emergency Cooling/Fire Suppression

Fire Suppression System
229GPM at 43psi of Plant Effluent
Note: Only activated manually in case of a fire.

Emergency Cooling System
33GPM at 43psi of Plant Effluent
Notes:
[1] Automatically activated based on a high temperature in the dryer (not required by the drying process).

Estimated Cleaning Systems Water Demand:

Heat Exchanger Cleaning

Extruder cleaning system
Plant Effluent (flow and pressure not critical)
Note: Only used during extruder cleaning.

Heat Recovery Heat Exchanger Cleaning System
12GPM (recommend potable water)
Pump required to boost pressure
Note: Only used as required to clean heat exchanger.

Belt Cleaning System
4GPM (recommend potable water)
Pump required to boost pressure
Note: Only used as required to clean belts.

# Equipment Summary - Dryer Scope of Supply

Hickory, NC November 12, 2021

<u>Dryer System:</u>

One (1) HUBER BT 26 Dryer, including (each):

- Two (2) Belts
  - Temperature Resistant Plastic
  - Upper Belt Drive
    - Est. 5HP, 460VAC, 3ph motor, VFD (BD-1261)
  - Lower Belt Drive
    - Est. 1HP, 460VAC, 3ph motor, VFD (BD-1262)
  - Belt Washing System for each belt with a common booster pump
    - Two (2) 0.5HP, 460VAC, 3ph motors for belt wash drive (BCD-1261 and BCD-1262)
    - 5HP, 460VAC, 3ph motor for booster pump (PMP1260)
- Support Frame
  - Internal Frame: 304L Stainless Steel
  - Head Pieces: 304L Stainless Steel
  - Interior Panels: 304L Stainless Steel
  - Exterior Panels: Painted Steel
- Extruder System
  - Traction Drive System
    - Est. 1.5HP, 460VAC, 3ph motor, VFD (EXT-1260)
  - Cutter Knife System
    - Est. 7.5HP, 460VAC, 3ph motor, VFD (EXT-1260B)
  - 304L Stainless Steel Construction
  - Feed Hose - 6" Proprietary Rubber (connects at the end of the dryer, reference drawings)
- Heat Exchangers:
  - Twenty six (26) Main Heat Exchangers
    - Combination 304 Stainless Steel Construction, AIMg
    - Each with a modulated valve 120VAC
  - One (1) Preheat Heat Exchanger
    - Combination of Galvanized Steel, Copper and AIMg
  - Two (2) Heat Recovery Heat Exchangers with recirculation pump
    - Combination of 304 Stainless Steel, Galvanized Steel, Copper and AIMg
    - Heat Recovery Pump - 1HP, 460VAC, 3ph motor (PMP-1277)
    - Heat Recovery cleaning system - Exhaust Air Heat recovery system
      - Cleaning System Drive Motor - estimated 1HP, 460VAC, 3ph (EA-1277)
- Crusher System at the end of the upper belt to break apart sludge layer:
  - Rotating rake, 304 Stainless Steel
    - Est. 1.5HP, 460VAC, 3ph motor, VFD (GR-1260)
  - Fixed Comb, 304 Stainless Steel

- Fans:
    - Twelve (12) Process Fans:
        - 304 Stainless Steel Material (or equal)
        - 10HP, 460VAC, 3ph Drive Motor (FAN-1260A to FAN-1260M)
- Fresh Air Inlet Box (IA-1260):
    - 304L Stainless Steel Material
- Emergency cooling system/manual firefighting system
- Discharge Conveyor:
    - 304 Stainless Steel Material
    - Shafted Screw
    - Carries Sludge to end of the dryer (reference drawings)
    - Est 2HP, 460VAC, 3ph motor (SC-1260)

- Heat Piping System - Parts only, Assembly by Contractor
    - Two (2) 6" pipes for supply and return hot water from customer supplied heating system each with:
        - 6" ANSI Flange to Connect to Piping Supplied by other for connection to heat system
            - Reference drawings for flange connection
        - Three (3) US Bellows Expansion joints 169124-01
        - Twenty-six (26) Flexicraft flexible hoses for dryer connection to header
        - Twenty-six (26) 1.5" isolation ball valves - FLO-TITE F150-CS-FFG-L-040
        - Flexitallic graphite based gaskets
    - Actuated Ball valves as listed below between supply header only (not return header)

- Instrumentation (HUBER Standard*):
    - Inlet Solids Meter - Valmet TS FT150 (AIT/AE-1260)
    - Discharge Solids Meter - ACO AMMS (AE/AIT-1261)
    - Two (2) Discharge Sludge Temperature Sensors - Pyromation R1T185L483-014-00-9HP23-T31200-2 (TIT-1262P and TIT-1262Q)
    - Two (2) transfer chamber level sensors - Vega PULS 62 (LIT/LE 1260 and LIT/LE-1261)
    - Three (3) Extruder Proximity Sensors - P & F NCB15-30GM40-N0 (ZS-1260A, ZS-1260B and ZS-1260C)
    - One (1) Extruder Pressure sensor - WIKA IS-20-S (PIT-1260)
    - One (1) Heating System Pressure sensor - WIKA IS-20-S (PIT-1276)
    - One (1) Extruder Camera [CAM-1260]
    - Two (2) Belt Wash proximity sensors - P&F NCB8-18GM40-N0 (with integral cable) (ZS-1261D and ZS-1262D)
    - Two(2) Belt Motion Sensors P&F NCB8-18GM40-N0 (ZS-1261A and ZS-1262A)
    - One (1) access door safety proximity switch - P&F NCB15-30GM40-N0
    - One (1) Thermostat for air temperature for safe access - United Electric Control B121 (not listed)
    - Twelve (12) Pressure sensors - VEGA BAR 82 (PIT-1260A to 1260M)

• Two (2) Temperature and Moisture Sensors for feed and exhaust air - (Vaisala Ind. HMP7) (TIT-1277 and AE/AIT-1277 and TIT-1261 and AE/AIT-1261)
• Two (2) Temperature sensors - supply and return of heating water
- Pyromation XP-RAF185L483-004-00-8HN74, T-441-385U-S(-30-200)C (TIT-1276A and TIT-1275)
• One (1) flowmeter for hot water supply Micro Motion 2051CFADL060CCHLS2A100032AA1RHM5Q4 (FIT/FE-1276)
• Two (2) Temperature sensors - supply/return of heat recovery water
- Pyromation XP-RAF185L483-004-00-8HN74, T-441-385U-S(-30-200)C (TIT-1277A and TIT-1277B)
• One (1) calorimeter to measure energy consumption - E&H RH33-AA1A+B1 (TIT-1276B)
• Twenty-Four (24) Temperature Sensors - Each Process Air Segment
- Pyromation R1T185L483-014-00-9HP23-T31200-2 (TIT-1261A Through 1262N and TIT - 1262A Through 1262N)
•Twenty-Six (26) Flow control valves (500-FCV-3840B through -3840Y)
- Sentinel 1.5" - RV040F1-01C50RT0V/RCEL-006-X/CSA-PCU-CPT-A120 (BV-1260A to 1260N and BV1261A to 1261N)
• One (1) flow control valve - for preheat heat exchanger
- Sentinel 1.5" - RV040F1-01C50RT0V/RCEL-006-X/CSA-PCU-CPT-A120 (ZSC/ZSO/HS/HS-1262)

• One (1) solenoid valve for emergency cooling system - Buerkert 5282 1.5", Brass (not listed)
• Six (6) solenoid valve for Heat Exchanger Cleaning System - Buerkert 5282 1", Brass [SV-1277A to SV-1277F]
• One (1) level sensor for dryer discharge overfill protection - Vega VIB 61 (VSH-1260)
• One (1) Differential Pressure Transmitter - Exhaust Air Heat Exchanger - KIMO CP115-AO [DPIT-1277]

NOTE: Instrumentation subject to change based on final controls design of HUBER Technology, Inc. All Instrumentation manufacturer and model numbers are for reference only. Allowance for "or equal" and "or latest replacement" at HUBER's discretion is reserved. When possible instrumentation will be pre-configured and setup prior to delivery

Ancillary Equipment

• One (1) Belt Wash Booster Pump - 5HP - CAT 5AG2120W.174258 or equal (PMP-1260)
• One (1) Heat Recovery Heat Exchanger Wash Booster Pump - 15HP - CAT 15AG1050.206120 or equal (PMP-1261)
• One (1) Heat Recovery Pump - 1HP - Grundfos CR5-3 A-FGJ-A-E-HQQE 56C or equal (PMP-1277)
• Please see Ancillary Scope of Supply for the Control Panel, MCC, Cake Hopper, Cake Pump, Tubular Drag Conveyor and Scrubber Scope of Supply

Note: All Ancillary manufacturer and model numbers are for reference only. Allowance for "or equal" and "or latest replacement" at HUBER's discretion is reserved. Equipment Horsepower and electrical specifications are estimated and subject to modification based on final design completed during equipment submittal phase.

Spare Parts and Tools:

- Two (2) Extruder Rebuild kits (perforated disc, knife, bearing, pressure spring)
- One (1) Moisture/Temperature sensor for dryer discharge air (Vaisala Ind. HMP7)
- Two (2) Hot Water Supply Actuators
- One (1) Air Module Pressure Sensor (VEGA BAR 82)
- One (1) Air Module Temperature Sensor (Pyromation R1T185L483-014-00-9HP23-T31200-2)
- One (1) PLCSCOM: Display for Vega Sensors
- One (1) Belt Tensioning Tool

Startup Services:

- One (1) Trip, Three (3) days on site for delivery and inspection of dryer equipment (not specified)
- One (1) Trip, Two (2) days on site for checkout and startup planning meeting (Per 01, 75, 00 , 1.2, B)
- Four (4) Trips, Twenty (20) days for installation assistance services (Per 46 36 10, 3.9, B,1)
- One (1) Trip, Five (5) days on site for mechanical tests (46 36 10, 3.3)
- One (1) Trip, Five (5) days on site for control system tests (46 36 10, 3.4)
- One (1) Trip, Five (5) days on site for Integrated Systems Test (46 36 10, 3.5)
- One (1) Trip, Three (3) days for Performance Testing (Per 46 36 10 , 3.6, C )
- Five (5) Trips, Twenty-five (25) days for System Training (Per 46 36 10 , 3.9, B, 4,a )
- One (1) Trip, Five (5) days for Follow-up Training (Per 46 36 10 , 3.9, 4, a, 3 )
- One (1) Trip, Two (2) days for Controls Training (Per 46 36 10 , 3.9, 4, b)

**Updated Price: $ 6,296,314**

Additional Scope:

- Pressure instruments associated with cake pump [PSH-1250, PI-1250, and PIT-1250]
- Pressure instruments associated with hot water pumps [PI-1275A, PI-1275B, PI-1276A, and PI-1276B]
- Seismic calculations stamped by a Professional Engineer licensed in North Carolina for dryer, motor control center, cake hopper, cake pump, discharge conveyor, boiler, and odor scrubber.

**Adder for Above: $ 61,807**

**Total Price: $ 6,358,121**

# Dryer Options

Hickory, NC November 12, 2021

**Optional Items which can be supplied by HUBER (but are not included in the above pricing):**

Please consult HUBER Technology, Inc.

# Clarifications and Specific Exceptions

Hickory, NC November 12, 2021

Clarifications

Pricing is based on 100% plans and specifications dated November 2020 supplied to HUBER Technology Inc. with additional comments discussed between HDR and HUBER Technology, Inc. to appear in final plans and specifications.

The following items are not included in HUBER's scope of supply:

- Polymer systems for sludge pump supply pipes (if required)
- Piping and electrical building layouts (assistance in design will be supplied)
- Piping and required piping insulation between all supplied equipment including but not limited to:
    - Insulation for hot water supply and return pipes on the dryer box.
    - Pipes interconnecting boilers
    - Pipes between boiler system and dryer
    - Pipes between boiler system and preheat heat exchanger
    - Pipes for water supply to belt cleaning system
    - Pipes for water supply to heat recovery System including fill valves and pressure indicators (PI-1277B and 1277A)
    - Pipes for heat recovery system
    - Pipes for scrubber process water
    - Pipes for scrubber cooling water and recirculation water
    - Pipes for sludge feed between Sludge Feed Pump and Dryer Extruder Hose
    - Pipes for belt wash and heat exchanger wash
    - Insulation for all required hot water pipes
    - Valves not included in the scope of supply
- Wiring between all supplied equipment
- Unloading and Storage of Equipment (if required)
- Installation
- Building structures
- Site Preparation
- Required maintenance platforms and cranes
- Concrete pad and insulation in concrete pad
- Boiler system fresh air ducts and exhaust stacks
- Odor control and/or dust suppression for dried solids conveyance, storage, or loading area (if required)
- Natural Gas supply to the burner/boiler system
- Costs of Performance Testing Lab and materials for performance testing
- Required valves not specifically listed in this scope of supply
- Ductwork unless otherwise indicated including:
    - Ductwork and insulation suppling fresh air to the dryer
    - Ductwork and insulation for exhaust air to odor control
    - Ductwork and insulation for exhaust air between the odor control and exhaust air fan

- Covers and insulation for ductwork in the connecting "elbows" between the modules
- HUBER's motors and gearboxes will be based on our standard designs for our dryer system
- Items not specifically listed in HUBER's scope of supply. Please contact HUBER Technology, Inc for clarifications.

Specific Exceptions

- Pricing is based on HUBER's standard fasteners, bolts, anchors, steel construction, fabrication techniques, welding, coatings and factory testing. (05 12 00, Part 2 and 05 50 00)
- Pricing of HUBER supplied piping for our dryer systems per our standard (40 05 00 and 40 05 24)
- HUBER supplied stainless steel for our dryer systems per our standard (40 05 33)
- HUBER's shafted discharge screw conveyor is designed specifically for our dryer and not designed per this section. (41 12 13)
- HUBER will only provide platforms, catwalks and handrails specifically called out in our scope of supply (46 36 10 1.5, D, 4)
- HUBER will provide the MCC for the dryer system - MCC5 and MCC6 (46 36 10, 1.5, G, 1 and H)
- HUBER will provide MCC5 and MCC6 of our standard design not per Division 26 and 26 24 16
- Motor disconnects to be supplied by others (46 36 10, 1.7, C)
- HUBER supply our standard electrical components per the scope of supply (46 36 10 1.7, C,2)
- HUBER has not included structural drawings of any system stamped by a North Carolina Engineer unless otherwise noted. (46 36 10 , 1.4, 5, d, 1)
- HUBER will supply the local control stations in NEMA 4X enclosures. The classified area of the panels should either be non classified or Class 1, Division 2, Group G.(46 36 10 2.3, N, 1)
- Please reference control panel scope of supply for the Local Control Stations Provided (46 36 10 2.3, N).
- HMI Panel will be nonclassified and should be located at least 10 ft from the dryer (46 36 10 2.7, B)
- Dried sludge density is not specified in section 1.6. HUBER can test for density but is not required to meet a specification. (46 36 10 3.6, C, 3, c)
- The conveyance system is sized for the specified solids throughput and assumed discharge density listed in proposal.
- HUBER typically supplies the large equipment such as the dryer, cake hopper, scrubber and odor control under separate submittal packages in order to quicken the submittal process (46 36 10, 3.8, 2)
- HUBER will provide a Performance Test Report with 15 business days of receiving the data from the analytical laboratory (46 36 10, 3.6, E,1)
- HUBER's equipment will maintain a sound pressure level of 85dBA per section 2.2,D (46 36 10, 3.8, 2)
- Please reference additional clarifications and exceptions in scope of supply.
- HUBER has supplied our standard terms and conditions as a basis for contractual discussions.
- Taxes and bonds (if applicable) are not included in HUBER pricing.
- Pricing is based on HUBER's terms and conditions included in this proposal

# Ancillary Items Scope of Supply

## Control Panel (with representative pictures):

**One (1) Dryer - Main Control Panel (LCP-1260):**

Power Supply: 120VAC-1PH-60HZ
Panel Classification: NONE
Location: Indoors, Climate Controlled Electrical Room

Enclosure, NEMA 12, Painted Steel, 2 door, Freestanding
Air Conditioner, NEMA 4X
Main Disconnect, Non-Fused Type, w/Through Door Disconnect Handle
Surge Protection, 120VAC
Fan, 120VAC
Programmable Logic Controller, AB Compactlogic to Include the Following:
- Required IO - (Virtual IO to MCC via Ethernet IP)
- Ethernet Communications Card
- Power Supplies
- Flex-Ex IO As Required (For Field Instrumentation)

Operator Interface Unit, AB PanelView Plus, 15" Color Touchscreen
24VDC Power Supply, Redundant Sola or Equal
UPS, Battery Backup, 1500W, Powerware 9130 or Equal
Ethernet Switch, Managed, 8-Port, N-TRON 708TX or Equal
Ethernet Switch, Un-Managed, POE, 4-Port, N-TRON 105TX or Equal
Lot, Circuit Breakers, 120VAC: [As Required]
Lot, Pilot Lights, Incandescent Type: [As Required]
Lot, Push Buttons: [As Required]
Lot, Selector Switches: [As Required]
Lot, Control Relays, Socket Type: [As Required]
Lot, Terminal Blocks: [As Required]
Lot, Intrinsically Safe Barrier: [As Required]
Lot, Dry Contacts: [As Required]
UL Label

**One (1) each Local Control Stations:**

**3-Hole, Dryer Entrance Control Station (LCS-1260A):**
Enclosure, NEMA 4X, 304 Stainless Steel
Lot, Pilot Lights, PTT, LED Type:
- Danger No Entrance
- Safe To Enter

Lot, Push Buttons:
- Emergency Stop

**7-Hole, Extruder Control Station (LCS-1260B):**
Enclosure, NEMA 4X, 304 Stainless Steel
Lot, Push Buttons:
- Emergency Stop
- Traction Extend
- Traction Retract
- Traction Maintenance

Lot, Selector Switches: [As Required]
- Traction Drive HOA
- Cutter Drive HOA
- Cutter Drive FOR (Spring Return from REV to OFF)

**6-Hole, Dryer Belt Control Station (LCS-1260C):**
Enclosure, NEMA 4X, 304 Stainless Steel
Lot, Push Buttons:
- Emergency Stop

Lot, Selector Switches: [As Required]
- Upper Belt HOA
- Upper Belt FOR (Spring Return from REV to OFF)
- Lower Belt HOA
- Lower Belt FOR (Spring Return from REV to OFF)
- Discharge Screw HOA (not shown)

**5-Hole, Upper Belt Cleaner Control Station (LCS-1261A):**
Enclosure, NEMA 4X, 304 Stainless Steel
Lot, Push Buttons:
- Emergency Stop
- Cycle Start
- Cycle Stop

Lot, Selector Switches: [As Required]
- Upper Belt Cleaner HOA
- Upper Belt Cleaner FOR (Spring Return from BOTH to OFF)

**5-Hole, Lower Belt Cleaner Control Station (LCS-1261B):**
Enclosure, NEMA 4X, 304 Stainless Steel
Lot, Push Buttons:
- Emergency Stop
- Cycle Start
- Cycle Stop

Lot, Selector Switches: [As Required]
- Lower Belt Cleaner HOA
- Lower Belt Cleaner FOR (Spring Return from BOTH to OFF)

**2-Hole, Heat Recovery Pump Control Station (not pictured) (LCS-1277):**
Enclosure, NEMA 4X, 304 Stainless Steel
Lot, Push Buttons:
- Emergency Stop

Lot, Selector Switches: [As Required]
- Heat Recovery Pump HOA

**4-Hole, Crusher Control Station (LCS-1260D):**
Enclosure, NEMA 4X, 304 Stainless Steel
Lot, Push Buttons:
- Emergency Stop

Lot, Selector Switches: [As Required]
- Crusher HOA

Lot, Lights PTT, LED [As Required]:
- Crusher Running
- Crusher Fault

**3-Hole, Hot Water Recovery Pump Control Station (Not Pictured) (LCS-1275):**
Enclosure, NEMA 4X, 304 Stainless Steel
Lot, Push Buttons:
- Emergency Stop

Lot, Selector Switches: [As Required]
- Recirculation Pump 1 HOA
- Recirculation Pump 1 HOA

**2-Hole, High Pressure Belt Wash Booster Pump Control Station (Not Pictured) (LCS-1261C):**
Enclosure, NEMA 4X, 304 Stainless Steel
Lot, Push Buttons:
- Emergency Stop

Lot, Selector Switches: [As Required]
- Booster Pump HOA

**2-Hole, High Pressure Heat Exchanger Wash Booster Pump Control Station (Not Pictured) (LCS-1260E):**
Enclosure, NEMA 4X, 304 Stainless Steel
Lot, Push Buttons:
- Emergency Stop
Lot, Selector Switches: [As Required]
- Booster Pump HOA

**5-Hole, Bunker Control Station (Picture Unavailable) (LCS-1250):**
Enclosure, NEMA 4X, 304 Stainless Steel
Lot, Push Buttons:
- Emergency Stop
Lot, Selector Switches: [As Required]
- Feed Screw 1 HOA
- Feed Screw 2 HOA
- Leveling Screw HOA
-Feed Pump HOA
Lot, Status Indication:
- PanelView 800, 6" Color Touch Screen
To Display following:
- Bin A Level
- Bin B Level
- Feed Screw 1 Running
- Feed Screw 2 Running
- Leveling Screw Running
- Feed Pump Running
- Feed Screw 1 Fault
- Feed Screw 2 Fault
- Leveling Screw Fault
- Feed Pump Fault

**HMI Station (HMI-1260)**
Power Supply: 24VDC
Panel Classification: NONE
Enclosure, NEMA 4X, 304 Stainless Steel
Operator Interface Unit, AB PanelView Plus, 15" Color Touchscreen
Terminal Blocks: [As Required]
UL Label

Note:
- HMI Station will be unclassified
- HMI will be programmed with identical program as installed on Main Panel HMI

**MCC5 and MCC6:**
Please see Scope of Supply at the end of this document for MCC Scope of Supply and Design

**Spares Parts**
One (1) Spare PLC CPU, I/O and Power supply
One (1) each of all Flex EX IO required for intrinsic isolation

**Factory Acceptance Testing:**
Testing to be conducted at EleMech, in Aurora, IL
Established procedure will be used.
Final testing documents will be submitted upon request.

Witnessed testing is included, if properly coordinated and scheduled. HUBER is not responsible for any expenses for the witnessing parties. Factory acceptance testing documents will be based on HUBER's typical testing forms specific custom testing forms are required, example documents will need to be provided and evaluated to determine if there will be an impact to the costs shown above for witnessed factory testing.

**MCC Coordination, Testing Setup and Teardown**
HUBER has included engineering coordination assistance with MCC supplier to assist with proper MCC delivery.
MCC Scope changes from that which is in this scope letter could change the price of the testing
Quote based on MCC being AB Ethernet/IP based and capable of networking to the HUBER supplied Allen-Bradley PLC.
MCC will be of "smart" mcc design and shall have Ethernet communication to/from each VFD and MOL.
If modifications are required from the MCC quoted, these will be evaluated separately and handled under a separate change order.
HUBER delivery MCC into our vendor (EleMech), setup up, and prep MCC for factory testing. Upon successful completion of factory testing, EleMech will repackage MCC and prep for delivery. Any and all settings, notes, changes will be documented and provided to MCC supplier for inclusion in their final "As Built" drawing.
Includes receipt of and setup for Two (2) MCC's, MCC5 and MCC6

**Additional Control Panel Notes:**
All required intrinsically safe connections will be through AB FLEX EX I/O. Instrumentation requiring intrinsic isolation will be wired directly to the FLEX EX I/O and networked to the HUBER PLC. PLC and FLEX EX I/O will be provided in same enclosure.
A single typical submittal will be provided for multiple control panels of the same design. The typical submittal will include a table detailing unique tags of each control panel as required.
Submittal Package, Including:

- Custom, project specific PID for Dryer
- Detailed schematic and control panel layout
- Bill of Material
- Catalog Cuts

Standard PLC Programming

- PLC programming to be in Ladder Logic
- PLC programming to be completed using standard library

Standard HMI Programming

- Colors, Fonts, and Format of HMI will follow HUBER Standard

**Not Included:**

- Junction boxes and local disconnects not included.
- Additional programming services not listed above.
- Seismic analysis, loop diagrams, harmonic studies, electrical site studies, etc.
- PLC logic diagrams, flow charts, loop diagrams, P&ID's, ISA data sheets, and point-to-point wiring diagrams
- Site acceptance testing
- Customer travel expenses associated with witnessed factory testing

**Notes:**

- Pricing includes HUBER standard Submittal documents, programming, testing procedures and O&M documentation
- The Control Panel pricing is based on the specification provided and inclusive to meet the requirements of a Vendor designed panel, whereas the components and the factory testing of the panel will meet the manufacturer's requirements for function and warranty. Additional requirements or sections of the specification to meet local authority requirements or control panels designs unrelated to the equipment section, including special labeling, testing, or integration have not been included.
- MCC Price and Scope is based on current motor schedule. Motor schedule can change during the submittal phase and may require redesign and additional cost.
- MCC construction is based on HUBER standard and not the project specifications.

## Cake Storage Hopper:

One (1) Sludge Storage Hopper (TK-1250)
Size: 52cuyd
• Hopper, exterior reinforcements, T-304ss plate, min. 0.25" wall thickness.
• Top cover penetrations per D# 12 D 112.
• Drain 4" flanged.

Stair structure:
• Structural framing, cs HDG
• Grating, aluminum treads
• Handrails, aluminum

Leveling Screw:
• 12" dia. shafted x 22', AR235 cs, ribbon type, one place.
• Shaft A53 cs 6" schedule 80 min. bolt coupled connection.

Pump suction chutes:
• Chute, Min. 0.25" pol. T-304ss.
• Gaskets as required
• Knife Gate, 14" dia. manual, one place, Dezurik or equal. (KVG-1250)
• Expansion joint, 14" dia. arched type Proco or equal, flanged.

Live bottom trough:
• Trough, T-304ss, min. 0.25" pl. reinforced as required.
• Flights AR235 cs, two places, min. 14" dia. x 20' ribbon type.
• Shaft A53 cs 6" schedule 80 min. bolt coupled connection.
• Flanged tail bearings.
• Durashield or equal tail seal.

Drive Assembly:
• Reducer, Leveling screw: SEW FA77 AGMA Class II.
• Reducer, Live bottom: SEW FA97R57 AGMA Class II.
• Drive and Tail shafts, 1045 CRS
• Flanged bearings
• Durashield end seals
• Drive assembly mounting frame.

Electrical:
• Leveling screw motor, one, 3 Hp, 230/460 v. 3 ph. 60 hz. TEFC 1800 rpm (SC-1250)
• Live bottom screw motors, two, 1.5 Hp, 230/460 v. 3 ph. 60 hz. 1800 rpm inverter duty. (SC-1255 and 1256)
• Ultrasonic sensors, two places, Siemens Multi-Ranger or equal. (LIT/LE-1250A and LIT/LE-1250B)
• Controller for Ultrasonic sensors, Multi-Ranger or equal.

One (1) Spare Parts, LOT:
• (8) Sets of end seals
• (1) Flange bearing assembly for drive end
• (1) Flange bearing assembly for tail end
• (2) Gearbox seals

One (1) On-sight Assistance for Field Quality Control:
• Three (3) service trips, each trip for two (2) days for installation, start-up & training, and services after startup.

Scope Clarifications/Exceptions:
1. 2.3.A.2.i.6: Specs states to cover the top cover plate with grating. This creates housekeeping issues. JMS is offering top cover in 304ss thread plate. Aluminum grating will be utilized only on stairs and landing.
2. 3.2: Clarification: On-site technical support for Field Quality Control details specified above
3. 46 22 00, 2.3, B, 9, knife gate incorrectly references section 40 05 61 which is gate valves, not knife gates. Knife gates are quoted herein.

4. Price based on drawings dated 11/2020.
5. Price above includes Engineering, submittals, and O&Ms.
6. Quote includes a Structural & Seismic PE Stamp.

Hopper Notes:

1. Any and all taxes including sales, use, gross receipts, or similar taxes imposed by federal, state or local authorities.
2. Control panels, ultrasonic, radar level sensors, controls, disconnects, or any electrical devices not specifically detailed in scope above.
3. Site off-loading, installation, and field assembly.
4. Any items required for system completion not listed on the Scope of Supply are considered exclusions.

## Cake Pumps (With Representative Diagram):

**One (1) Progressive Cavity Pump (PMP-1250)**

Netzsch
NM063SF06S24K
(or equal)

Application:
Material: Dewatered Sludge Cake
Density: 45-65lb/cuft
Particle Size: 0.1-5mm
pH Value: 6-8 (assumed)
Solids Content 16-28% DS
Dynamic Viscosity: 5,000-50,000mPa s
Kinematic viscosity: 328568.42 - 2080933.33 mm2/s
Chloride Content: 0ppm

Flowrate Nominal: 20GPM
Differential Pressure: 411psi
Discharge Pressure: 411psi
Suction Pressure: 0
Operating Speed: 78RPM
Sliding Velocity: 1.3ft/s
Frequency: 59Hz
Power required at drive shaft: 15HP
Running Torque: 990ft/lb
Starting Torque: 1442ft/lb
Operational Temperature: 50-86°F
Flooded Suction
Installation Aggregate: Horizontal
Electrical: 460VAC/3ph/60Hz
Direction of Rotation: CCW (from the drive end)
Painting/Coating: Manufacturer Standard

Housing
Housing material: Steel
Hopper (length/width: 750 X 360mm
Hopper with compression chamber: removable
Flange Position: Vertically Upwards (Suction)
Support Foot: Yes
End Connection Design: Flange Design to ANSI (ASME B16.5)
Discharge flange: 4" – CL300
Function: Pressure connection
Housing Seals: NBR

Shaft Seal
Manufacturer: Chesterton
Shaft seal type: 280 dual seal
Shaft seal material: prod.side Q1Q1VMG / atmos.side BQ1VMG
Shaft Seal Design:
Cartridge
Please provide clean flushing medium. The flushing pressure should be at 10%, or as a minimum 2 bar, higher than the medium to be sealed
Connection: NTP ¼"

Rotating Parts
Material AISI 420/Steel
Coupling Rod Execution: with standard screw continuous

Joints
Gear Joint
Sealing execution: double seal
Join Sealing Material: NBR
Joint Lubrication: Mineral Oil
Filling Medium Between Seals: Identical to joint lubrication

Rotor
Rotor material: CrNiMO 17-12-2 (AISI 316)
Rotor Surface: Wear Chrome Plated
Temperature range 20°C normal size

Stator
Stator material: NEMOLAST S61L
Stator Bolt Material: Stainless Steel

Accessory
Mounted on the pump: STP3 with Omron Controller (shipped loose)

Helical Geared Drive
Mfg: Nord
Type: SK63 280TC
Drive Ratio: 20.77
Construction: B3
Motor Size 280TC
Motor arrange for drive: B5
Motor Flange Diameter: 375mm

Motor
Mfg: WEG
Type: 03018ET3E286TC-W22
Type Addendum: TW
Construction: B5
Voltage: 230/460 3ph 60hz
Number of poles: 4
Power: 30HP
Rated Current: 35.1 Amps
Cos Phi: 0.84
Motor Speed: 1765RPM
Protection: IP55
Insulation Class: F, used according to B
Temperature Monitor: thermal signal to open contactor
Drive Flange Diameter: 375mm

Baseplate:
Spec: C-profile base plate
Material: Painted Steel
Additional Equipment: Drain rim
Coupling: Rotex
Coupling guard: Standard (in material AISI 304)

Plan 53 seal water tank with stand

Spare parts (if required by the design)
One (1) shaft
One (1) Stator
One (1) Rotor
One (1) Connecting rod
One (1) joint assembly

Any inverter used must, as a minimum, have the following characteristics:

- Constant torque
- IA / IN min. 1.8
- Boost function for min 10 s
- 3 phase supply

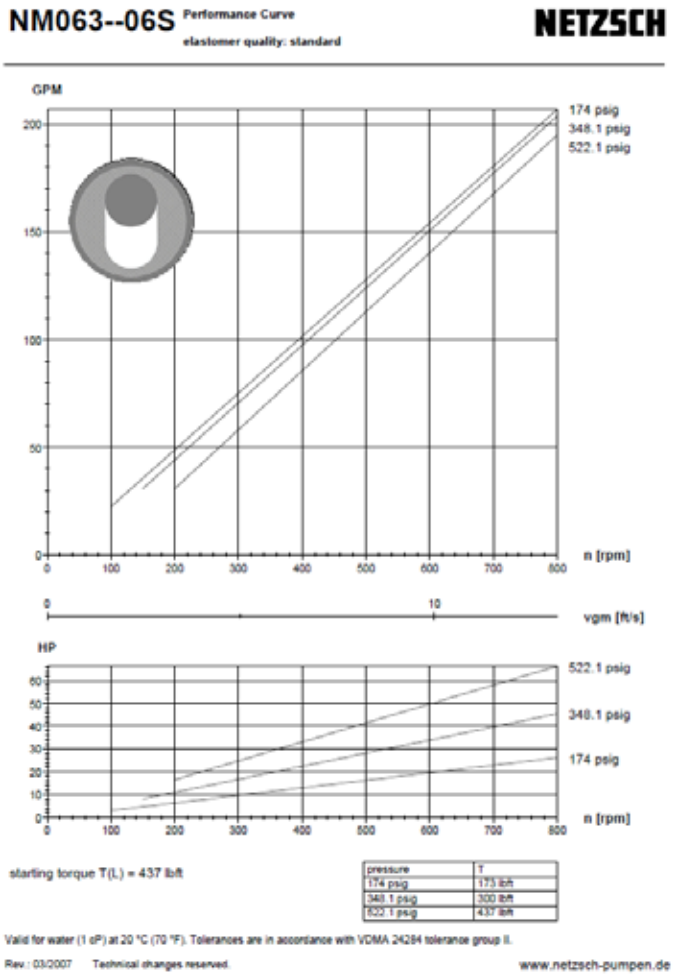

## Hot Water Boiler System:

Thermal Solutions EVS Boiler

Four (4) Boilers - Evolution Model EVS-3000 (B-1271, B-1272, B-1273 and B-1274)

- Input 3000 MBH (each)
- Output 2,610 MBH (each)
- Natural Gas with UL/FM/CSD-1 Gas Train
- Gas Pressure 6" wc Min and 2psig Max
- ASME Section IV Design (Max 160 psig / 250 deg F)
- UL Certified
- AHRI Certified Thermal Efficiencies
- Rugged Heat Exchanger (Unmatched Fireside Heating Surface)
- Robust & Gasketless Header Design and Thickest Tubes (.072")
- Maintenance-Free Burner
- Ultra-Low NOx Emissions (<10ppm)
- Whisper Quiet Noise Emissions (<50dba)
- Single Point Power Connection
- Flexible Venting Options (Includes Sealed or Room Air Option)
- Factory Firetest on Every Unit
- Footprint -6 sq.ft/11 sq.ft.

The Thermal Solutions Boiler Control (TSBC) complete monitoring and automation system

- Provides advanced modulation
- Operating control, diagnostics, and multiple boiler lead-lag and auxiliary device control.
- Features are:
  - Intelligent Lead/Lag Sequencing (Up to 8 Boilers)
  - Multiple Auxiliary Device Control (i.e. Boiler Pump)
  - Outdoor Temperature Reset
  - Domestic Hot Water Priority (DHWP)
  - Warm Weather Shutdown (WWSD)

- § Building Management System Interface via Modbus
- § Communication Capability with Various Protocols (i.e. BACnet)

Standard Trim and Controls

- o Operating Control, TSBC (24v)
- o High Temperature Limit (Max 240 deg F)
- o Water Flow Switch (FSL-1271, FSL-1272, FSL-1273 and FSL-1274)
- o LWCO Probe-Type, Manual Reset
- o Pressure & Temperature Gauge (TI/PI-1271, TI/PI-1272, TI/PI-1273 and TI/PI-1274)
- o Relief Valve: 50 PSI
- o Blower Motor: 2 hp
- o Voltage: 480/3/60 (Amps 3.7)
- o Flame Safegaurd
- o Modulating Gas Valve
- o Aux. Solenoid Gas Valve
- o Pilot Gas Valve
- o Pilot Gas Regulator
- o Pilot/Leak Test Cocks
- o High/Low Gas Pressure Switches
- o Combustion Air Switch
- o Variable Frequency Drive for blower motor

Options Included:

- o (1) Remote Header Temperature Sensor, Well Mounted – Loose
- o (1) Well, Remote Header Temperature Sensor – Loose
- o (4) Boiler Pump Relay

Four (4) Boiler Recirculation Pumps (PMP-1271, PMP-1272, PMP-1273 and PMP-1274)

- o Grunfos TP 100-800/4
- o 2HP, 208-230/460VAC, 60hZ, 3ph, Baldor, TEFC
- o Pump housing: Cast Iron, EN-JL 1040, ASTM 25 B
- o Impeller: Stainless Steel, DIN W.-Nr. 1.4301, AISI 304
- o Shaft Seal: BUBE
- o 4” ANSI Flanges

Two (2) System Hot Water Pumps (PMP-1275 and PMP-1276)

- o Taco 4” x 3” Base Mounted Pump with 9.5” Impeller (or equal)
- o 254T 15HP, 1760RPM, ODP, 3230/460/3ph/60hz,
- o Rated for 511 GPM at 64ft of head
- o Suction Diffuser 6” x 4” FLGD 125lb
- o Taco 6” FLGD Multipurpose Valve 125lb (CV-1275 and CV-1276)
- o Rated to 250°F

Notes:

Not included in the scope of supply

- o Boiler System Expansion tank
- o Boiler Fill Valve
- o Manual Valves Shown on the contract drawings
- o BFV-1275, 1276, 1277 and 1278

## Scrubber System:

**Design Criteria:**

| | Odor Source: Dryer | | | |
|---|---|---|---|---|
| **Parameter** | **Units** | **Average** | **Transient Maximum** | **Remarks** |
| Airflow – Dryer | cfm | 14,700 | N/A | Max. Inlet air temp = 183ºF<br>Max. RH = 46% |
| Airflow – WWTP | cfm | 5,310 | N/A | |
| Total: | cfm | 20,010 | | |
| $H_2S$ | ppmv | 5.0 | 20.0 | |
| TRS | ppmv | 0.5 | 2.0 | |
| $NH_3$ | ppmv | 5 | 25 | |
| | | | | |
| | | | | |
| Air temperature | °F | 154 | 180 | |
| Relative humidity | % | 50 | 55 | |

System Performance (based on parameters above and standard performance testing protocol):

Stage 1:

The system's $NH_3$ removal efficiency shall be determined by using the following formula:

$NH_3$ removal efficiency (%) = (1 – average outlet $NH_3$ concentration / average inlet $NH_3$ concentration) x 100.

Average $NH_3$ removal ≥ 99% (when inlet $NH_3$ concentration is ≥ 10 ppmv) or $NH_3$ in the outlet ≤ 0.1 ppmv (when inlet $NH_3$ concentration is < 10 ppmv).

In the event that the maximum $NH_3$ concentration exceeds the design peak $NH_3$ concentration during the test period, the $NH_3$ acceptance criteria shall not apply and the system shall be considered to have passed the performance test.

Stage 2 (Combined):

The system's $H_2S$ removal efficiency shall be determined by using the following formula:

$H_2S$ removal efficiency (%) = (1 – average system outlet $H_2S$ concentration / average system inlet $H_2S$ concentration) x 100.

Average $H_2S$ removal ≥ 99% (when inlet $H_2S$ concentration is ≥ 10 ppmv) or $H_2S$ in the outlet ≤ 0.1 ppmv, (when inlet $H_2S$ concentration is < 10 ppmv)

In the event that the maximum $H_2S$ concentration exceeds the design peak $H_2S$ concentration during the test period, the $H_2S$ acceptance criteria shall not apply and the system shall be considered to have passed the performance test.

The system's TRS removal efficiency shall be determined by using the following formula:
TRS removal efficiency (%) = (1 – average system outlet TRS concentration / average system inlet TRS concentration) x 100.

Average TRS removal ≥ 90% (when inlet TRS concentration is ≥ 1.0 ppmv) or TRS in the outlet ≤ 0.1 ppmv, (applies when inlet TRS concentration is < 1.0 ppmv).

In the event that the maximum TRS concentration exceeds the design peak TRS concentration during the test period, the TRS acceptance criteria shall not apply and the system shall be considered to have passed the performance test.

Required Utilities:

| 2-Stage Chemical Scrubber | | |
|---|---|---|
| Electrical Power Supply | 120 V / / 60 Hz | Note 460VAC / 60Hz / 3ph Motor Control for blower and reciprocation pumps in the MCC |
| Required Water Supply | 1 gal/min @ 35 psi | |
| Water Use | 22 gal/day | Based on 12 hours of operation per day |
| Estimated Chemical Use | 0.08 gal/hr or 93% $H_2SO_4$<br>8.3 gal/hr of 12% NaOCl solution<br>1.0 gal/hr of 25% NaOH solution | |

**Scope of Supply:**

Qimi CS6.510 Reactor, SCR-1290 (stage 1):

One (1) single stage Qimi® Chemical Scrubber System made from fire retardant (FR) Fiberglass Reinforced Plastic (FRP) and constructed to comply with ASTM D3299 and C582. An internal mist eliminator shall be provided on the outlet of the vessel.

| | Approximate Values | |
|---|---|---|
| Qimi - Vessel Diameter | 6.5 | (feet) |
| Airflow | 14,700 | (cfm) |
| Height to top of Qimi Vessel | 24 | (feet) |
| Recirculation rate (stage 1) | 170 | (gpm) |
| Blowdown rate (stage 1) | 0.05 | (gpm) |
| System ΔP* | 1.6 | (In. wc.) |

Condensation Trap:

One (1) Condensation Trap [MT-1290], to be installed on the discharge of the Stage 1 scrubber to prevent excess moisture from entering the blower. The drain from the trap to be ducted, by others, to a suitable site drain location.

Qimi CS7.5106 Reactor, SCR-1295 (stage 2):

One (1) single stage Qimi® Chemical Scrubber System made from fire retardant (FR) Fiberglass Reinforced Plastic (FRP) and constructed to comply with ASTM D3299 and C582. An internal mist eliminator shall be provided on the outlet of the vessel.

| | | Approximate Values |
|---|---|---|
| Qimi - Vessel Diameter | 7.5 | (feet) |
| Airflow | 20,010 | (cfm) |
| Height to top of Qimi Vessel | 30 | (feet) |
| Recirculation rate (stage 1) | 290 | (gpm) |
| Blowdown rate (stage 1) | 0.3 | (gpm) |
| System ΔP* | 2.7 | (In. wc.) |

* Not including impedance of ductwork upstream of the blower

Control Panel (LCP-1290):

- One (1) Control Panel – 120VAC
- UL508 Label
- Fabricate from 316 Stainless Steel
- Allen Bradley 1400 PLC and HMI
- Control of the chemical addition
- Monitoring of standard control functions
- Monitoring of alarms
- One Control Panel Skid is included

One (1) Air Handling Blower (FAN1290):

One (1) blower manufactured by Verantis or Equal and is sized to provide the design air flow against a predetermined head, as determined by HUBER or HDR and confirmed by BioAir. One (1) flex connector on the blower inlet and one (1) blower outlet transition piece is included in BioAir's scope of supply

One (1) Shelf-Spare Blower

One (1) Actuated Isolation Damper:

To be located in the air duct between the dryer and the inlet of the stage 1 scrubber, the actuated damper valve will allow isolation of the dryer while the dryer is shut down.

Note: **Supplied loose for installation at the site by others.**

Ductwork:

One (1) lot of interconnecting ductwork located:

Between the first stage acid scrubber and the inlet to the condensation trap

Between the condensation trap to the inlet of the blower

Between the odor control blower and the inlet to the second stage scrubber

Chemical Recirculation System

Two (2) Vanton Reticulation pumps for recirculation of the stage 1 and stage 2 reactor vessels

Pumps sized for the recirculation rate listed above (PMP-1290 and PMP-1295)

Strainer

Flowmeter (FE/FIT-1290 and FE/FIT-1295)

Diaphragm valve

Pressure indicator (PI-1290 and PI-1295)

**Note: starters for the recirculation pumps are located in the MCC**

Makeup Water Assembly:

Each reactor will have:

Strainer

Flowmeter (FSL-1290 and FSL-1295)

Diaphragm Valve (BV-1290 and BV-1295)

Chemical Metering Pumps:

One (1) Duty, skid mount (by BioAir) Watson-Marlow metering pump to supply a 93% Sulfuric Acid Solution to the stage 1 vessel (PMP-1288)

Flow switch on the pump discharge (PSH/PI-1288)

**Note: pump will be installed, by others adjacent to the sulfuric acid stage tank**

Two (2) Duty, skid mount (by BioAir) Watson-Marlow metering pump to supply a 12% sodium hypochlorite and 25% sodium hydroxide solution to the stage 2 vessel. (PMP-1285 and PMP-1280)

Flow switch on the pump discharge (PSH/PI-1285 and PSH/PI-1280)

**Note: pump will be installed, by others, inside adjacent to the caustic and hypochlorite storage tanks**

Instrumentation:

One (1) ORP Transmitter (AE/AIT-1295B)

Two (2) pH Transmitters (AE/AIT-1290 and AE/AIT-1295A)

Four (4) Level Switches (high/low level switch for each vessel sump) (LSH-1290, LSL-1290, LSH-1295 and LSL-1295)

One (1) Temperature Transmitter on the stage 1 Qimi outlet [TIT-1290E]

Four (4) Differential Pressure Gauges to measure across the chemical scrubber media bed and the mist eliminator (DPI-1290A, DPI-1290B, DPI-1295A, DPI-1295B)

Included Services and Equipment:

One (1) trip with four (4) on-site days is included for equipment startup

BioAir service person will measure and confirm the airflow and hydrogen sulfide into the reactor

Certify the mechanical and electrical installation of the equipment

One (1) site day for training

BioAir, at the discretion of the Owner will provide complete operational and maintenance training with excerpts from the O&M manual.

Both classroom and hands on on-site sessions

After the system is fully started up and operational, BioAir will provide the necessary testing and monitoring equipment to confirm the system is operating correctly and performing as specified.

H2S Acceptance Criteria:

The system's H2S removal efficiency shall be determined by using the following formula:

H2S removal efficiency (%) = (1 – average system outlet H2S concentration / average system inlet H2S concentration) x 100.

The system shall have passed the H2S performance test if either one of the following conditions is true:

1. The average system H2S removal efficiency is ≥ 99% (applies when inlet H2S concentration is ≥ 10 ppmv)
2. The average overall system outlet air H2S concentration is ≤ 0.1 ppmv (applies when inlet H2S concentration is < 10 ppmv).

In the event that the maximum H2S concentration exceeds the design peak H2S concentration during the test period, the H2S acceptance criteria shall not apply and the system shall be considered to have passed the performance test.

TRS Acceptance Criteria:

The system's TRS removal efficiency shall be determined by using the following formula:
TRS removal efficiency (%) = (1 – average system outlet TRS concentration / average system inlet TRS concentration) x 100.

The system shall have passed the TRS performance test if either one of the following conditions is true:

1. The average system TRS removal efficiency is ≥ 90% (applies when inlet TRS concentration is ≥ 1.0 ppmv)
2. The average overall system outlet air TRS concentration is ≤ 0.1 ppmv (applies when inlet TRS concentration is < 1.0 ppmv).

In the event that the maximum TRS concentration exceeds the design peak TRS concentration during the test period, the TRS acceptance criteria shall not apply and the system shall be considered to have passed the performance test

Documentation:

Engineering Submittals - The Engineering Submittals will contain detailed information on the equipment being supplied with equipment lists, drawings and calculations.
Offloading, Installation & Startup Instructions - Provided prior to equipment shipment is the offloading instructions, Installation and Startup Manual. Instructions are detailed with graphic and photographic demonstrations for the plug and play assembly and installation.
Operation & Maintenance Manuals - An Operations and Maintenance Manual will be provided prior to startup of the equipment and will contain details of operation, monitoring recommendations and a troubleshooting guide, along with a listing of all components.
Structural drawings and Calculations - Structural drawings and Calculations shall be provided showing compliance with the specified requirements for Wind Loading, Snow Loading and Seismic Loading and shall be signed by a Professional Engineer.

Clarifications and Assumptions:

- The internal packing media is shipped separately to be installed by the contractor
- System panels shall be mounted a minimum of three (3) feet from reactor, ductwork and blower and outside of an NEC Class 1 Division 2 designated area.
- Controls and instrumentation included in this scope of supply is per Specification Section 44 31 11. Per consulting engineer, this is the extent of the specifications governing the odor control controls / instrumentation.
- Section 46 36 10, paragraph 2.4. 3.a states "No visible emissions". Air leaving the Packed Tower odor control equipment will be warm and moist. It is not possible to guarantee that condensation in the discharge air will not form or be visible.
- Section 44 31 11, paragraph 2.9.D lists flows for the first and second stage recirculation pumps. The pumps include herein are sized specifically for the odor control system provided, which requires a lower flow.
- The stage-1 chemical scrubber is designed for a maximum inlet air temperature of 183°F with a maximum relative humidity of 46%. If the relative humidity is higher it will impact the system's ability to adiabatically cool the airstream, so an external air heat exchanger would be needed to cool the air, which is not included in BioAir's scope.

Items Not Included:

- Performance Testing (unless specified above)
- Emergency Safety Shower Station

- Water Softener system
- Design and construction of concrete foundation slab
- Receiving and offloading of equipment
- Placement and assembly of the system components
- Connection of inlet air, drain piping, electrical power, and chemical/recirculation system supply
- Connection or supply of water piping including supply to control skid, interconnecting piping from control skid to irrigation nozzle connections, recirculation system piping, makeup water piping, drain piping, or other field piping/valves.
- Anchor Bolts
- Supply or installation of interconnecting electrical equipment or labor including power supply to control panel, power from control panel or VFDs to motors/field disconnects, and power/signals from control panel to field-mounted instruments.
- Provision, installation, and insulation of heat tracing (if required) for water/nutrient lines or chemical totes
- Installation and insulation of interconnecting duct work with associated hardware
- Provision of ductwork, dampers and expansion joints upstream of the Stage 1 Acid Scrubber inlet (with the exception of the actuated damper in Section 2.2.7 which is supplied loose by BioAir for installation by others)
- All ductwork supports (alignment tabs are provided on the side of vessels for ductwork / piping)
- Heat tracing, insulation or other freeze protection for all ductwork, piping, tubing, etc. (if required)
- Chemical storage tanks and/or chemicals
- Felt paper below vessel(s). (Vessel(s) to be set on minimum two (2) layers of Type II (No.30) ASTM D226 Felt Paper.)
- Operation of the equipment
- Neutralization of the drain water (if required)

## Scrubber Cooling Loop System:

Cooling Loop Heat Exchanger System

**Scope of Supply:**

- Plate Heat Exchanger (Sondex S-Series or equal) [HX-1290]
    - Plate material 304 Stainless Steel
    - Gasket Material – Nitril
    - Frame – Painted Steel
- Recirculation Pump – will use the scrubber acid stage pump from the scrubber look
- Cooling Water Control Valve [BV-1291]
    - Flo-Tite Sentinel or equal
    - Reference part number: RV-F1-01-CS-50-SL-A-DO-R-V-N-100/ RCEL-0
    - Segmented type, flanged ends
    - WCB body,
    - CF8M Ball/Stem
    - CF3M/SS 316L Stem
    - Devlon seats
    - RTFE Stem Packing
    - Viton O-Ring w/RCI RCEL-019 Electric Actuator
        - 120VAC
        - Switches: 2x open/close
        - 4-20ma modulation
- Four (4) Temperature indicators [TS-1290A to TS-1290D]
    - Pyromation XP-RAF185L483-004-00-8HN74, T-441-385U-S(-30-200)C or latest replacement
    - NPW Cooling water supply
    - NPW Cooling water return
    - Condenser Recirculating Water supply
    - S Condenser Recirculating Water return
- Pressure Sensor (if required no tag)
    - IFM PF2652 or latest replacement

## Tubular Drag Conveyor:

**Design Parameters:**

- Material: Dried Biosolids
- Particle Size: Up to 1"
- Bulk Density: 10-35lb/cuft
- Abrasiveness: Mildly
- Moisture Content: >90% Dry
- Temperature of Material: 100°F
- Material Characteristics: None Known
- Flowability: Free Flowing

**Conveyor Parameters:**

- Conveyor Size: 6" diameter
- Convey Rate: Up to 2.25 $Ft^3$/min
- Chain Speed: 16 Feet/ Min.
- Conveyor Circuit: Bulb loop Gooseneck
- Voltage Service Available: 460V/3Ph/60Hz
- Operation Characteristics:

  Frequency: Continuous
  Operation: 24 Hours/Day
  7 Days/Week

*Conveyor design is based on the parameters listed above. Please advise if these parameters are incorrect so we can evaluate the design for possible modifications.

**Scope of Supply:**

One (1) Hapman Tubular Drag Conveyor

- Flanged inlet 14"x 14" construction flanged opening. Stainless Steel Construction.
- Stainless steel construction
- 136ft of drop forged, carbon steel rivet-less series #458 chain. Assembled complete with two-piece replaceable U.H.M.W. polyethylene flights.
- 132 feet of 6" schedule #40 conveyor casing and slotted round flanges with joint gaskets. Stainless steel construction.
- * Pipe flanges are offset on pipe ends to create male-female joints. Male pipe ends point in the direction of chain movement through the installed circuit. Each flange is match-marked to coincide with the joint identification specified on general arrangement drawings to facilitate ease of assembly beginning and ending at the conveyor's drive box.
- Two (2) 6" schedule #40, 112° bends. Stainless steel construction.
- One (1) 6" schedule #40, 90° bend. Stainless steel construction.
- Drive Box (90 degrees) complete with inlet tube, outlet tube, and flight guides. Includes removable sprocket cover. Stainless steel construction.
- Drive Plate Assembly consisting of a drive plate with a high efficiency, right-angle bevel gear reducer, driven by a 5 HP, Class II, Division 2, explosion proof motor. Stainless steel construction.
  - 1.5 Service Factor per Specification
  - Calculated HP requirement = 2.2 HP - Supplied motor, 5 HP
  - Calculated Driveshaft torque = 22,653 lbs – Supplied Gearbox up to 38,500 lbs.
- Upper 180° Idler Box with bearings and idler sprocket. Includes conveyor chain take-up and discharge transition with 10" diameter outlet. Stainless steel construction.

- One (1) Chain vibrator with 1 HP, Class II, Division 2, explosion proof motor. Mounted at conveyor discharge to enhance release of material from the conveyor chain and minimize carry back. Stainless steel construction.
- Two (2) inspection openings for chain installation and inspection. Stainless steel construction.

CONTROL PANEL (LCP-1265)

- NEMA 4 X Stainless Steel enclosure.
- Disconnect w/ fusing.
- VFD for 5 HP tubular conveyor drive motor.
    - VFD provides electronic shear pin and monitors for no load condition.
- IEC non-rev. contactor & OL for 1 HP chain vibrator motor.
- 150 VA control transformer.
- MANUAL / OFF / AUTO selector switch (discrete enable from remote PLC by others).
- Green START pushbutton.
- Red STOP pushbutton.
- Black REVERSE JOG pushbutton (works only in "maintenance" mode).
- Green ON pilot light.
- Ships loose for field location and wiring by others.

START-UP & TRAINING

- Three (3) days of on-site service have been included in this proposal.
    - Audit the installation
    - Fine tune the controls
    - Train operators in the proper operation and maintenance of the controls and equipment

**Notes:**

- The conveyor will be interlocked with the dryer discharging material.
- The VFD controlling the conveyor motor monitors for a jam condition and will immediately stop the conveyor if one is detected, displaying the corresponding fault code on the VFD module. Likewise, the VFD will monitor for a no-load condition such as if the chain were to derail or break, again displaying the corresponding fault code.
- Start-up and Training is based that all mechanical installation and wiring are complete before the technician arrives and two weeks' notice is required for scheduling purposes.
- Additional service time is available for $1200/day plus travel expenses.
- Major components are set up, chain is installed and the conveyor is test run prior to shipment (some long straight sections of pipe may be omitted from the circuit due to space limitations).
- All external carbon steel surfaces will be painted with one coat of blue enamel.
- All external hardware will be STAINLESS STEEL. Per specification
- All gaskets will be white nitrile.
- Approval drawings showing general equipment layout with dimensions.
- Hapman will not be responsible for any damage or changes in conveying ability caused by the equipment being located or stored outdoors.
- Above prices do not include supports, anchors, or installation.

## HAZOP Analysis:

**Scope of Supply:**

- 3rd party Consultant for DHA system analysis
- Single Consultant – 2 day session
- Report on findings

# Rockwell Automation

**Centerline 2100 Motor Control Center**

## Front Elevation

MCC5

Rockwell Automation/Allen-Bradley
PowerControl Builder Lineup

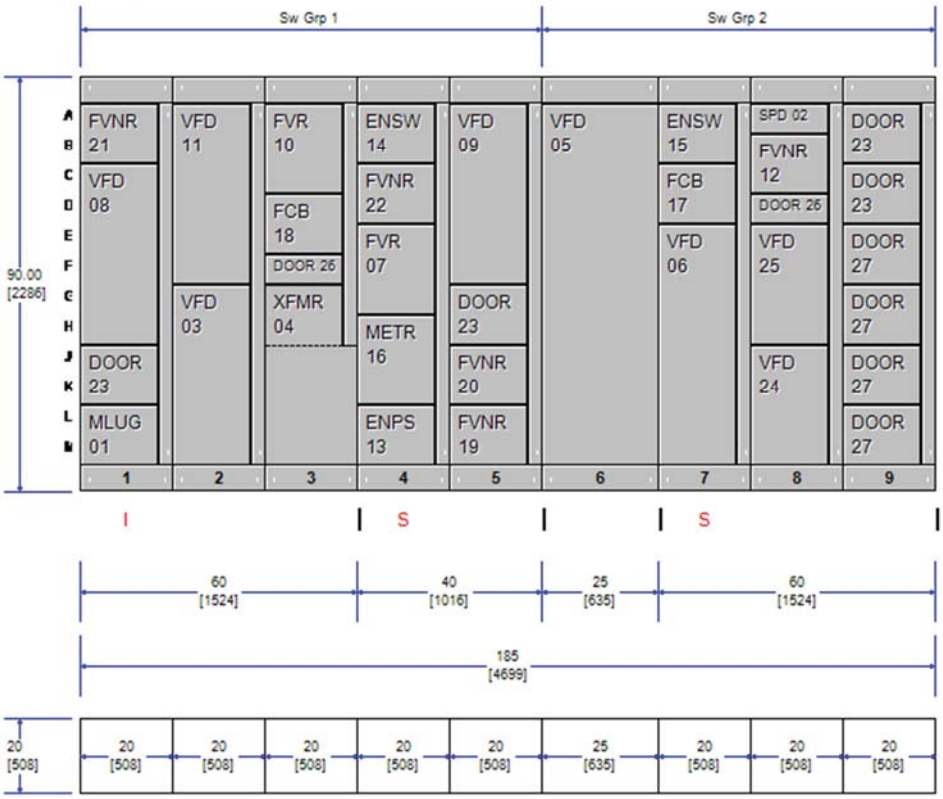


NOTE: Dimensions are subject to change after design review.
ENCLOSURE: NEMA Type 12 (Fully Gasketed with Bottom Closing Plates)

Estimated Heat Loss: 4885 watts
BTU/hr Required: 16669
Air Conditioning Tons: 1.39
Estimated Weight: 4500 lb (2041 kg)
Heat loss values are for estimating purposes only.

MCC6

# Rockwell Automation

**Centerline 2100 Motor Control Center**

## Front Elevation

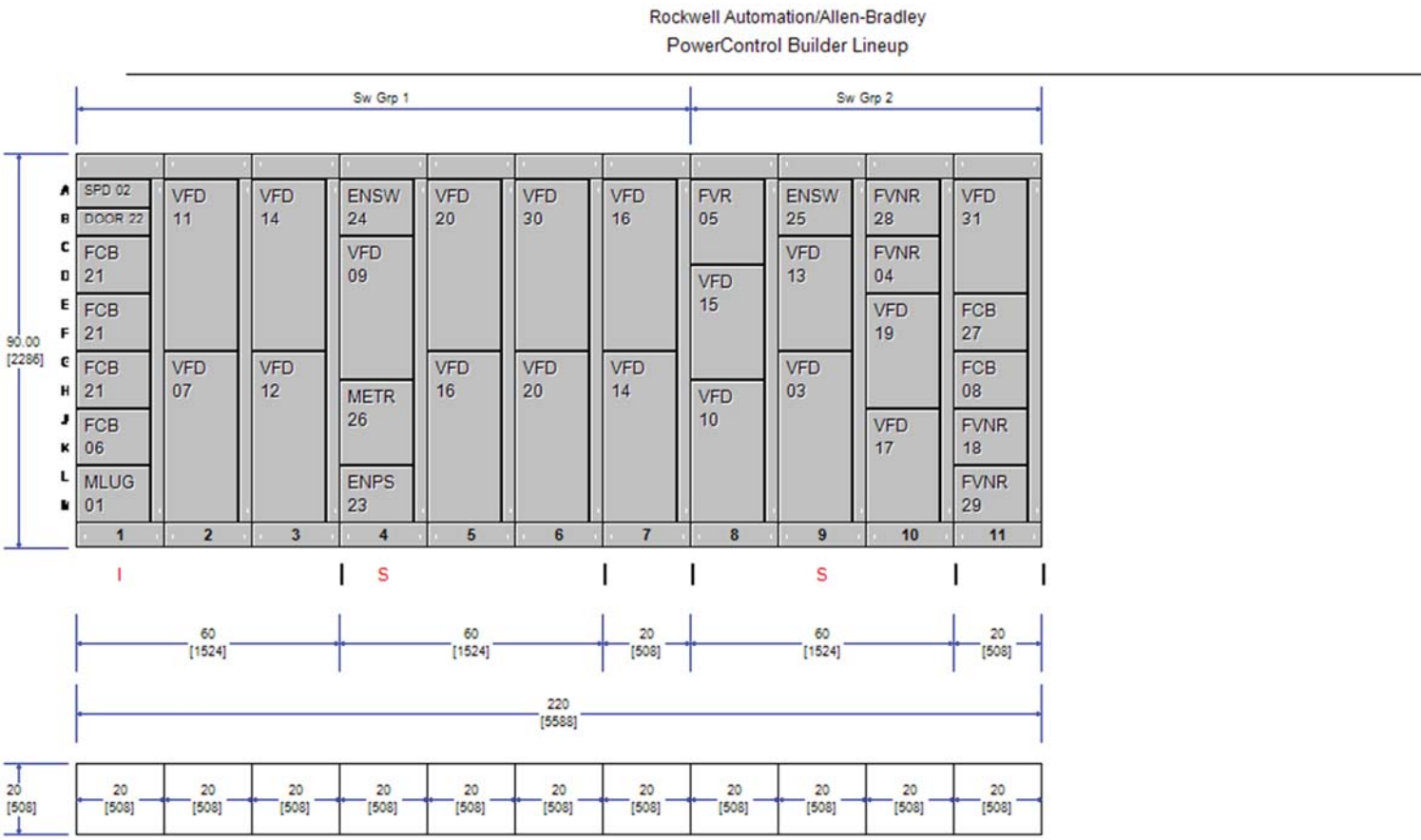


NOTE: Dimensions are subject to change after design review.
ENCLOSURE: NEMA Type 12 (Fully Gasketed with Bottom Closing Plates)

Estimated Heat Loss: 4745 watts
BTU/hr Required: 16192
Air Conditioning Tons: 1.35
Estimated Weight: 5500 lb (2495 kg)

Heat loss values are for estimating purposes only.

# Rockwell Automation

**Centerline 2100 Motor Control Center**

**Specifications**

## *1.0 General*

The Motor Control Center (MCC) shall be constructed to meet or exceed the requirements within NEMA ICS3-322, UL845, CSA, and IEC 439-1 for MCC. The MCC shall be designed, manufactured, and tested in facilities registered to ISO9001 quality standards.

The MCC enclosure shall be NEMA Type 12 - Fully Gasketed with Bottom Plates. Any gasketing shall be closed cell neoprene material. Open cell gasketing shall not be acceptable.

The MCC shall be rated for a 480 Volts / 60 Hertz system with an available fault current of 50,001 to 65,000 A. Each short circuit protective device shall be rated to interrupt this fault current. Provisions for terminating a neutral wire at the MCC need not be provided.

This MCC(s) was developed using an available fault current of 50,001 to 65,000 A. MCC configuration & pricing subject to change, if actual Available Fault Current differs.

The MCC shall be designed for use with a power system configured as a Wye, 3-phase, 3-wire with solidly grounded neutral.

## *2.0 Vertical Sections*

The vertical sections shall be 90" (2286 mm) high and 20" (508mm) deep. To assure structural rigidity, vertical sections shall have internal base mounting angles at the bottom and external lifting angles at the top running continuous within each shipping block. Lifting eyelets at the top are not acceptable.

To minimize the chance of fault propagation to adjacent sections, each vertical section shall have side sheets extending the full height and depth of the section.

## *3.0 Incoming Line Compartments*

The Line Lugs shall be Bottom entry. The size and quantity of incoming cables shall be shown on the drawings.

## *4.0 Wireways*

Horizontal wireways of standard sections, both top and bottom, shall be not less than 6’’ (150mm) high. To prevent damage to cable insulation, the wireway opening between sections shall have rounded corners and the edges shall be rolled back.

The vertical wireway shall be approximately 4.4" (111mm) wide. A permanent vertical wireway wall shall separate the units from the vertical wireway, and remain intact even when the units are removed. If a permanent wireway wall cannot be provided, tie bars shall be included in each vertical wireway.

## *5.0 Power Bus Bars*

The power bus system shall be supported, braced, and isolated by a bus support molded of a high strength, non-tracking glass-filled polyester material. Bus bracing shall be rated to withstand the fault current listed in Section 1.0 of this specification, but shall not be rated less than 65kA (rms symmetrical).

The horizontal bus shall be continuously braced within each section. It shall be Copper / Tin Plated and rated 600A.

To ensure the reliability of the splice connections, both ends of the horizontal bus splices shall have at least two (2) bolts.

The vertical bus shall be continuously braced and sandwiched in a glass-filled polyester molding. The bus shall be isolated from the user via a red non-metallic molded cover. The vertical bus shall be copper with the same plating as the horizontal bus, and shall accommodate plug-in loads totaling up to600A.

The horizontal bus shall be connected to the vertical bus with two (2) bolts, and each bolt shall be independently capable of handling the load.

## *6.0 Ground Bus Bars*

The horizontal ground bus bar shall be tin-plated copper and located in the Bottom horizontal wireway. The size of the horizontal ground bus shall be 1/4" x 1" (6.4 x 25.4mm).

A grounding stab shall be provided on each plug-in unit, such that the stab engages onto a copper vertical ground bus prior to the power stabs engaging.

## *7.0 Isolation and Insulation*

To minimize the exposure of live bus bars to personnel, the stab opening shall not allow entry of a 1/2" (13mm) diameter rod.

## *8.0 Units*

8.1 Unit Mounting

After insertion, each plug-in unit shall be held in place by a latch that is located at the front of the unit. Multi-turn latches requiring more than ten (10) turns per latch shall not be acceptable.

Plug-in stabs shall be mounted in a polyester molding at the rear of the unit. Wiring from the unit disconnecting means to the plug-in stabs shall be routed into this molding such that the wiring is not exposed at the rear of the unit.

Non-reversing starters shall be plug-in design through 250A.

The unit door shall be fastened to the stationary structure (not the unit itself), so that the door can be closed when the unit has been removed. The door shall be hinged on the left-hand side so that it opens away from the vertical wireway.

8.2 Disconnecting Means

The operator handle of all units shall be interlocked with the MCC frame, so that a unit insert cannot be withdrawn or inserted when the operator is in the ON position.

8.3 Starters

Starters shall be of NEMA, not IEC design. That is, starters shall have molded coils, replaceable contacts, and a metal mounting plate. Starters shall have provisions for accepting up to (7) auxiliary contacts and (1) overload alarm contact. Starter units shall be supplied with 3-pole manual reset overload relays, providing Class 20 operation. An overload relay that can be switched between automatic or manual reset is not acceptable. Units shall have a solid state overload relay. All starters shall be size 1 or larger and no intermediate sizes (such as 1-3/4) will be acceptable.

8.4 Terminal Blocks

To minimize exposure to live terminals, terminal blocks shall be mounted within each unit, not in the vertical wireway. On non-plug-in (frame mounted) units, terminal blocks need not be pull-apart style. On plug-in units, control terminal blocks shall be pull-apart style.

8.5 Control Station

Pilot devices shall be of NEMA design.

8.6 Documentation

Wiring diagrams shall be provided at a centralized location in the MCC. The diagrams shall show the exact devices inside the unit and shall not be a generic diagram. The manufacturers unit wiring diagrams, elevation drawings, and floor plan shall be available for review prior to placement of the order.

## *9.0 Finish*

Standard paint for any exterior surfaces is ANSI 49 medium light gray, and standard paint for all vertical wireways and unit back plates is gloss white. All unpainted parts shall be plated for corrosion resistance.

MCC5

# Rockwell Automation

## Centerline 2100 Motor Control Center

## Structure and Unit Specifications

Network Type: Ethernet
Unit Diagram Location: Central location
Services Selected: Startup Services; Training: 1 - 4 students

### STANDARD STRUCTURE / SECTION SPECIFICATIONS

Line Voltage / Frequency: 480 Volts / 60 Hertz
Class I Wiring Type: B-D Control Terminal Blocks Only
NEMA Enclosure Type: 12 - Fully Gasketed with Bottom Plates

| QTY | STANDARD STRUCTURE / SECTION SPECIFICATION | DELIV PROG |
|---|---|---|
| 1 | POWER SYSTEM - WYE, 3-PHASE, 3-WIRE WITH SOLIDLY GROUNDED NEUTRAL | SCII |
| 3 | GRD BUS SPLICE, (1) 0.25" × 1" (CU/TIN) | SCII |
| 3 | HORIZ PWR BUS SPLICE, 600A, CU/TIN | SCII |
| 1 | DIRECT ENET & 24V CABLING (NO VWW ADAPTERS) FOR FRAME MOUNT SECTIONS | SCII |
| 8 | DIRECT ENET CABLING (NO ENET VWW ADAPTERS), 24V CABLING W/ 24V VWW ADAPTERS | SCII |
| 9 | SECT DEPTH 20" | SCII |
| 9 | NEMA ENCL TYPE 12 (FULLY GASKETED, DOORS AND REMOVEABLE COVERS) | SCII |
| 9 | BASE SECTION | SCII |
| 9 | HORIZ GRD BUS, 0.25" X 1" CU/TIN | SCII |
| 9 | HORIZ PWR BUS, 600A, CU/TIN | SCII |
| 9 | BUS BRACING 65KA RMS SYMMETRICAL | SCII |
| 8 | VERT PWR BUS, 300A, CU/TIN | SCII |
| 8 | VERT GRD BUS, PLUG-IN, CU/TIN | SCII |
| 8 | WIREWAY TIE BAR(S) | SCII |

### STARTER / UNIT SPECIFICATIONS

| ID | QTY | CATALOG NUMBER | SPACE FACTOR | DELIV PROG |
|---|---|---|---|---|
| 1 | 1 | 2191MB-BJC-52-52M-85ECBB | 1 | SC |
| 2 | 1 | 2100-SPJB-1-79UT-751M | 0.5 | SC |
| 3 | 1 | 2163WB-024JB-14DFAJT-14HC2S-14RLX-42TGM-79UT-751HS | 3 | SC |
| 4 | 1 | 2197-QJBH-31TGM-79UT | 3 | SC |
| 5 | 1 | 2163UB-096NJB-14DA2R1-14DFLPJ-14GER-14HC6S-14RLX-49TJM-751HS | 6 | SC |

MCC5

# Rockwell Automation

## Centerline 2100 Motor Control Center

## Unit Description

### General Information

| | |
|---|---|
| Line Voltage / Frequency: | 480 Volts / 60 Hertz |
| Power System Configuration: | Wye, 3-phase, 3-wire with solidly grounded neutral |
| Class I Wiring Type: | B-D Control Terminal Blocks Only |
| NEMA Enclosure Type: | 12 - Fully Gasketed with Bottom Plates |
| Available Fault Current: | 50,001 to 65,000 A |
| Unit Nameplate Type: | Acrylic - Black letters on white |
| Delivery Program: | PEII |

### Unit Information

| Description | Unit Features |
|---|---|
| **Unit Loc: 01A** **Del Prog: SCII**<br>**Unit ID: 21**<br>FVNR - Full Voltage Non-Reversing Starter w/CB<br><br>**Rating**<br>2 HP<br><br>**Name Plate Information**<br>BOILER<br>NO. 3<br>RECIRCULATIO PUMP<br>PMP-1273<br><br>**Overload Relay(s)**<br>E300 Comm Based Overload (7FE3)<br>E300 Communication Option = EtherNet/IP<br>E300 Voltage Code = 120V AC<br>E300 Control Module = Ground Fault & PTC<br>E300 Sensing Module = 0.5-30A Current/Ground Fault<br>E300 Operator Station = Diagnostic Station<br>E300 Expansion Module = Not Available<br>Motor RPM = 1800<br>Motor Full Load Current (FLC) = 3.11<br>Motor Service Factor = 1.15<br><br>**Ethernet Information**<br>Device Type: 2113<br>IP Address: 192.168.1.4<br>Subnet Mask: 255.255.255.0<br><br>Cable Length : 2.31 m<br><br>E300 Overload Firmware Version : LATEST | **Catalog Number: 2113B-BDB-6P-7FE3EDGN3GD-17-37TGA-79UT-106-751HS-790B**<br>Size: NEMA Size 1<br>Total Space Factor = 1<br>Wiring: NEMA Type B wiring<br>Circuit Breaker: Instantaneous MCP, 65kA at 480V (G8P Frame) (7A Trip)<br>Control: Transformer with Secondary Fuse, Standard Capacity, Primary Fusing, 120V/60Hz<br>Control Wiring: #16 AWG MTW(TEW) Cu<br><br>**Features Included**<br>Std Capacity Control Power Transformer W/Primary Fuses (-6P)<br>Contactor Surge Suppressor (-17)<br>Unit Grd Stab Tin Plated Cu (-79UT)<br>Omit Power Terminal Blocks (-106)<br>Heat Shrink Type Markers (-751HS)<br>2 Aux and 1 Alarm-Internal-CB (-790B) |

| | |
|---|---|
| **Unit Loc: 01C** **Del Prog: SCII**<br>**Unit ID: 8**<br>VFD - PowerFlex 525 AC Drive w/CB<br><br>**Rating**<br>10 HP<br><br>**Wiring Diagram**<br>10003912429<br><br>**Name Plate Information**<br>SEGMENT<br>PROCESS<br>AIR FAN<br>FAN-1260J<br><br>**Ethernet Information**<br>Device Type: 2163W<br>IP Address: 192.168.1.5<br>Subnet Mask: 255.255.255.0<br><br>Cable Length : 3.89 m<br><br>PowerFlex 525 Firmware Version : LATEST | **Catalog Number: 2163WB-017JB-14DFCC-14HC2S-14RLX-41TGM-79UT-751HS**<br>Total Space Factor = 3<br>Wiring: NEMA Type B wiring<br>Output Current Rating: 17A<br>Circuit Breaker: Thermal Magnetic, 65kA at 480V (G6C Frame) (30A Trip)<br>Human Interface Module: LCD Door display,digitl keypad - Door Mounted<br>Control: Transformer with Secondary Fuse, Standard Capacity, Primary Fusing, 120V/60Hz<br>Control Wiring: #16 AWG MTW(TEW) Cu<br><br>**Features Included**<br>Drive I/P fuses - Class CC (-14DFCC)<br>Drive Line Reactor (-14RLX)<br>Unit Grd Stab Tin Plated Cu (-79UT)<br>Heat Shrink Type Markers (-751HS) |
| **Unit Loc: 01J** **Del Prog: SCII**<br>**Unit ID: 23**<br>DOOR - Blank Unit Door | **Catalog Number: 2100-BJ10**<br>Total Space Factor = 1 |
| **Unit Loc: 01L** **Del Prog: SCII**<br>**Unit ID: 1**<br>MLUG - Main Incoming Lug Compartment<br><br>**Rating**<br>600A | **Catalog Number: 2191MB-BJC-52-52M-85ECBB**<br>Total Space Factor = 1<br>Lug Compartment: 600A 1.0 space factor, Bottom Mounted<br>Lugs Supplied: None Supplied<br>Neutral Lugs Supplied: None Selected<br>Metering Type: Ammeter/Voltmeter w/Sw (3 CT)<br><br>**Features Included**<br>Ammeter 600A Scale (-52M) |

**Unit Loc: 02A** **Del Prog: SCII**
**Unit ID: 11**
VFD - PowerFlex 525 AC Drive w/CB

**Rating**
15 HP

**Wiring Diagram**
10002845952

**Name Plate Information**
RECIRCUATION
PUMP 1
HEATING SYSTEM
PMP-1275

**Ethernet Information**

| Device Type | IP Address | Subnet Mask |
|---|---|---|
| 2163W | 192.168.1.6 | 255.255.255.0 |

Cable Length : 2.97 m

PowerFlex 525 Firmware Version : LATEST

**Catalog Number: 2163WB-024JB-14DFAJT-14HC2S-14RLX-42TGM-79UT-751HS**
Total Space Factor = 3
Wiring: NEMA Type B wiring
Output Current Rating: 24A
Circuit Breaker: Thermal Magnetic, 65kA at 480V (G6C Frame) (60A Trip)
Human Interface Module: LCD Door display,digitl keypad - Door Mounted
Control: Transformer with Secondary Fuse, Standard Capacity, Primary Fusing, 120V/60Hz
Control Wiring: #16 AWG MTW(TEW) Cu

**Features Included**
Drive I/P fuses - Mersen (-14DFAJT)
Drive Line Reactor (-14RLX)
Unit Grd Stab Tin Plated Cu (-79UT)
Heat Shrink Type Markers (-751HS)

**Unit Loc: 02G** **Del Prog: SCII**
**Unit ID: 3**
VFD - PowerFlex 525 AC Drive w/CB

**Rating**
15 HP

**Wiring Diagram**
10002845952

**Name Plate Information**
RECIRCULATION
PUMP 2
HEATING SYSTEM
PMP-1276

**Ethernet Information**

| Device Type | IP Address | Subnet Mask |
|---|---|---|
| 2163W | 192.168.1.7 | 255.255.255.0 |

Cable Length : 3.96 m

PowerFlex 525 Firmware Version : LATEST

**Catalog Number: 2163WB-024JB-14DFAJT-14HC2S-14RLX-42TGM-79UT-751HS**
Total Space Factor = 3
Wiring: NEMA Type B wiring
Output Current Rating: 24A
Circuit Breaker: Thermal Magnetic, 65kA at 480V (G6C Frame) (60A Trip)
Human Interface Module: LCD Door display,digitl keypad - Door Mounted
Control: Transformer with Secondary Fuse, Standard Capacity, Primary Fusing, 120V/60Hz
Control Wiring: #16 AWG MTW(TEW) Cu

**Features Included**
Drive I/P fuses - Mersen (-14DFAJT)
Drive Line Reactor (-14RLX)
Unit Grd Stab Tin Plated Cu (-79UT)
Heat Shrink Type Markers (-751HS)

**Unit Loc: 03A** **Del Prog: SCII**
**Unit ID: 10**
FVR - Full Voltage Reversing Starter w/CB

**Rating**
0.5 HP

**Name Plate Information**
TRACTION DRIVE
BELT CLEANING
NO. 2
BCD-1262

**Overload Relay(s)**
E300 Comm Based Overload (7FE3)
E300 Communication Option = EtherNet/IP
E300 Voltage Code = 120V AC
E300 Control Module = Ground Fault & PTC
E300 Sensing Module = 0.5-30A Curr/Grnd Fault/Volt
E300 Operator Station = Diagnostic Station
E300 Expansion Module = Not Available
Motor RPM = 1800
Motor Full Load Current (FLC) = 1.1
Motor Service Factor = 1.15

**Ethernet Information**

| Device Type | IP Address | Subnet Mask |
|---|---|---|
| 2107 | 192.168.1.8 | 255.255.255.0 |

Cable Length : 1.39 m

E300 Overload Firmware Version : LATEST

**Catalog Number: 2107B-BDB-6P-7FE3EDGN3VD-18A-33TGA-79UT-106-751HS**
Size: NEMA Size 1
Total Space Factor = 1.5
Wiring: NEMA Type B wiring
Circuit Breaker: Instantaneous MCP, 65kA at 480V (G8P Frame) (3A Trip)
Control: Transformer with Secondary Fuse, Standard Capacity, Primary Fusing, 120V/60Hz
Control Wiring: #16 AWG MTW(TEW) Cu

**Features Included**
Std Capacity Control Power Transformer W/Primary Fuses (-6P)
Programmed Control Relay Contact (-18A)
Unit Grd Stab Tin Plated Cu (-79UT)
Omit Power Terminal Blocks (-106)
Heat Shrink Type Markers (-751HS)

---

**Unit Loc: 03D** **Del Prog: SCII**
**Unit ID: 18**
FCB - Feeder Circuit Breaker

**Rating**
15A

**Wiring Diagram**
10004092272

**Name Plate Information**
BOILER
UNIT
NO. 4
B-1274

**Overload Relay(s)**
Motor Full Load Current (FLC) = Not Available

**Catalog Number: 2193F-AJB-30TGM-79UT**
Total Space Factor = 1
Circuit Breaker: Thermal Magnetic, 65kA at 480V (15) with Frame Rating of 125A (G6C Frame), Plug-In Unit, 15A Trip
Lugs Supplied: Std Mech/Lug Pads, 1/0 AWG Size Wire, 1 Cables per Phase

**Features Included**
Unit Grd Stab Tin Plated Cu (-79UT)

---

**Unit Loc: 03F** **Del Prog: SCII**
**Unit ID: 26**
DOOR - Blank Unit Door

**Catalog Number: 2100-BJ05**
Total Space Factor = 0.5

| | |
|---|---|
| **Unit Loc: 03G** **Del Prog: SCII**<br>**Unit ID: 4**<br>XFMR - Control & Lighting Transformer w/CB<br><br>**Wiring Diagram**<br>10004092302 | **Catalog Number: 2197-QJBH-31TGM-79UT**<br>Total Space Factor = 3<br>Secondary Wiring Fusing & Rating: 3-Phase, 120/208V, 3 Fuse, 15.0 kVA<br>Circuit Breaker: Thermal Magnetic, 65kA at 480V (G6C Frame) (20A Trip)<br><br>**Features Included**<br>Unit Grd Stab Tin Plated Cu (-79UT) |
| **Unit Loc: 04A** **Del Prog: PEII**<br>**Unit ID: 14**<br>ENSW - Stratix 5700 20-Port<br><br>**Wiring Diagram**<br>10003468745<br><br>**Ethernet Information**<br>Device Type: 2100-ESW<br>IP Address: 192.168.1.1<br>Subnet Mask: 255.255.255.0<br><br>No Cable Length<br><br>Ethernet Switch Firmware Version : LATEST | **Catalog Number: 2100-ESW20J-T10FAP-751HS**<br>Total Space Factor = 1<br>Full Stratix 5700 Firmware<br>Power Adapters (w/Unit Mtg)<br><br>**Features Included**<br>Heat Shrink Type Markers (-751HS) |
| **Unit Loc: 04C** **Del Prog: SCII**<br>**Unit ID: 22**<br>FVNR - Full Voltage Non-Reversing Starter w/CB<br><br>**Rating**<br>25 HP<br><br>**Name Plate Information**<br>RECIRCULATION<br>PUMP<br>NO. 2<br>PMP-1295<br><br>**Overload Relay(s)**<br>E300 Comm Based Overload (7FE3)<br>E300 Communication Option = EtherNet/IP<br>E300 Voltage Code = 120V AC<br>E300 Control Module = Ground Fault & PTC<br>E300 Sensing Module = 6-60A Current/Ground Fault<br>E300 Operator Station = Diagnostic Station<br>E300 Expansion Module = Not Available<br>Motor RPM = 1800<br>Motor Full Load Current (FLC) = 32.34<br>Motor Service Factor = 1.15<br><br>**Ethernet Information**<br>Device Type: 2113<br>IP Address: 192.168.1.9<br>Subnet Mask: 255.255.255.0<br><br>Cable Length : 1.63 m<br><br>E300 Overload Firmware Version : LATEST | **Catalog Number: 2113B-CDB-6P-7FE3EDGN6GD-17-44TGA-79UT-106-751HS-790B**<br>Size: NEMA Size 2<br>Total Space Factor = 1<br>Wiring: NEMA Type B wiring<br>Circuit Breaker: Instantaneous MCP, 100kA at 480V (G8P Frame) (50A Trip)<br>Control: Transformer with Secondary Fuse, Standard Capacity, Primary Fusing, 120V/60Hz<br>Control Wiring: #16 AWG MTW(TEW) Cu<br><br>**Features Included**<br>Std Capacity Control Power Transformer W/Primary Fuses (-6P)<br>Contactor Surge Suppressor (-17)<br>Unit Grd Stab Tin Plated Cu (-79UT)<br>Omit Power Terminal Blocks (-106)<br>Heat Shrink Type Markers (-751HS)<br>2 Aux and 1 Alarm-Internal-CB (-790B) |

**Unit Loc: 04E** **Del Prog: SCII**
**Unit ID: 7**
FVR - Full Voltage Reversing Starter w/CB

**Rating**
0.5 HP

**Name Plate Information**
TRACTION
DRIVE BELT
CLEANING NO. 1
BCD-1261

**Overload Relay(s)**
E300 Comm Based Overload (7FE3)
E300 Communication Option = EtherNet/IP
E300 Voltage Code = 120V AC
E300 Control Module = Ground Fault & PTC
E300 Sensing Module = 0.5-30A Current/Ground Fault
E300 Operator Station = Diagnostic Station
E300 Expansion Module = Not Available
Motor RPM = 1800
Motor Full Load Current (FLC) = 1.1
Motor Service Factor = 1.15

**Ethernet Information**

| Device Type | IP Address | Subnet Mask |
|---|---|---|
| 2107 | 192.168.1.10 | 255.255.255.0 |

Cable Length : 2.05 m

E300 Overload Firmware Version : LATEST

**Catalog Number: 2107B-BDB-6P-7FE3EDGN3GD-18A-33TGA-79UT-106-751HS**
Size: NEMA Size 1
Total Space Factor = 1.5
Wiring: NEMA Type B wiring
Circuit Breaker: Instantaneous MCP, 65kA at 480V (G8P Frame) (3A Trip)
Control: Transformer with Secondary Fuse, Standard Capacity, Primary Fusing, 120V/60Hz
Control Wiring: #16 AWG MTW(TEW) Cu

**Features Included**
Std Capacity Control Power Transformer W/Primary Fuses (-6P)
Programmed Control Relay Contact (-18A)
Unit Grd Stab Tin Plated Cu (-79UT)
Omit Power Terminal Blocks (-106)
Heat Shrink Type Markers (-751HS)

**Unit Loc: 04H** **Del Prog: SCII**
**Unit ID: 16**
METR - Metering Unit

**Wiring Diagram**
10002854515

**Ethernet Information**

| Device Type | IP Address | Subnet Mask |
|---|---|---|
| 2190 | 192.168.1.2 | 255.255.255.0 |
| 2190 | 192.168.1.3 | 255.255.255.0 |

Cable Length : 2.82 m

Power Monitor Firmware Version : LATEST

**Catalog Number: 2190-CJB-52M-79UT-86W54CXB-751HS**
Total Space Factor = 1.5
Metering Type: Bul 1426-M5 PM 5000 w/Ethernet
Ammeter Scale 600

**Features Included**
Unit Grd Stab Tin Plated Cu (-79UT)
Heat Shrink Type Markers (-751HS)

| | |
|---|---|
| **Unit Loc: 04L** **Del Prog: SCII**<br>**Unit ID: 13**<br>ENPS - Ethernet Power Supply Unit<br><br>**Rating**<br>125A<br><br>**Wiring Diagram**<br>10004444669 | **Catalog Number: 2100-EPS8JBH-30TGM-79UT**<br>Total Space Factor = 1<br>Circuit Breaker: Thermal Magnetic, 65kA at 480V (G6C Frame) (15A Trip)<br>Disconnect Type = Circuit Breaker<br>Control: Transformer with Secondary Fuse, Standard Capacity, Primary Fusing, V/60Hz<br>Control Wiring: #16 AWG MTW(TEW) Cu<br><br>**Features Included**<br>Unit Grd Stab Tin Plated Cu (-79UT) |
| **Unit Loc: 05A** **Del Prog: SCII**<br>**Unit ID: 9**<br>VFD - PowerFlex 525 AC Drive w/CB<br><br>**Rating**<br>10 HP<br><br>**Wiring Diagram**<br>10003912429<br><br>**Name Plate Information**<br>SEGMENT<br>PROCESS<br>AIR FAN<br>FAN-1260K<br><br>**Ethernet Information**<br>Device Type: 2163W<br>IP Address: 192.168.1.11<br>Subnet Mask: 255.255.255.0<br><br>Cable Length : 3.05 m<br><br>PowerFlex 525 Firmware Version : LATEST | **Catalog Number: 2163WB-017JB-14DFCC-14HC2S-14RLX-41TGM-79UT-751HS**<br>Total Space Factor = 3<br>Wiring: NEMA Type B wiring<br>Output Current Rating: 17A<br>Circuit Breaker: Thermal Magnetic, 65kA at 480V (G6C Frame) (30A Trip)<br>Human Interface Module: LCD Door display,digitl keypad - Door Mounted<br>Control: Transformer with Secondary Fuse, Standard Capacity, Primary Fusing, 120V/60Hz<br>Control Wiring: #16 AWG MTW(TEW) Cu<br><br>**Features Included**<br>Drive I/P fuses - Class CC (-14DFCC)<br>Drive Line Reactor (-14RLX)<br>Unit Grd Stab Tin Plated Cu (-79UT)<br>Heat Shrink Type Markers (-751HS) |
| **Unit Loc: 05G** **Del Prog: SCII**<br>**Unit ID: 23**<br>DOOR - Blank Unit Door | **Catalog Number: 2100-BJ10**<br>Total Space Factor = 1 |

**Unit Loc: 05J** **Del Prog: SCII**
**Unit ID: 20**
FVNR - Full Voltage Non-Reversing Starter w/CB

**Rating**
2 HP

**Name Plate Information**
BOILER
NO. 2
RECIRCULATION PUMP
PMP-1272

**Overload Relay(s)**
E300 Comm Based Overload (7FE3)
E300 Communication Option = EtherNet/IP
E300 Voltage Code = 120V AC
E300 Control Module = Ground Fault & PTC
E300 Sensing Module = 0.5-30A Current/Ground Fault
E300 Operator Station = Diagnostic Station
E300 Expansion Module = Not Available
Motor RPM = 1800
Motor Full Load Current (FLC) = 3.11
Motor Service Factor = 1.15

**Ethernet Information**

| Device Type | IP Address | Subnet Mask |
|---|---|---|
| 2113 | 192.168.1.12 | 255.255.255.0 |

Cable Length : 3.13 m

E300 Overload Firmware Version : LATEST

**Catalog Number: 2113B-BDB-6P-7FE3EDGN3GD-17-37TGA-79UT-106-751HS-790B**
Size: NEMA Size 1
Total Space Factor = 1
Wiring: NEMA Type B wiring
Circuit Breaker: Instantaneous MCP, 65kA at 480V (G8P Frame) (7A Trip)
Control: Transformer with Secondary Fuse, Standard Capacity, Primary Fusing, 120V/60Hz
Control Wiring: #16 AWG MTW(TEW) Cu

**Features Included**
Std Capacity Control Power Transformer W/Primary Fuses (-6P)
Contactor Surge Suppressor (-17)
Unit Grd Stab Tin Plated Cu (-79UT)
Omit Power Terminal Blocks (-106)
Heat Shrink Type Markers (-751HS)
2 Aux and 1 Alarm-Internal-CB (-790B)

**Unit Loc: 05L** **Del Prog: SCII**
**Unit ID: 19**
FVNR - Full Voltage Non-Reversing Starter w/CB

**Rating**
2 HP

**Name Plate Information**
BOILER
NO. 1
RECIRCULATION PUMP
PMP-1271

**Overload Relay(s)**
E300 Comm Based Overload (7FE3)
E300 Communication Option = EtherNet/IP
E300 Voltage Code = 120V AC
E300 Control Module = Ground Fault & PTC
E300 Sensing Module = 0.5-30A Current/Ground Fault
E300 Operator Station = Diagnostic Station
E300 Expansion Module = Not Available
Motor RPM = 1800
Motor Full Load Current (FLC) = 3.11
Motor Service Factor = 1.15

**Ethernet Information**

| Device Type | IP Address | Subnet Mask |
|---|---|---|
| 2113 | 192.168.1.13 | 255.255.255.0 |

Cable Length : 3.46 m

E300 Overload Firmware Version : LATEST

**Catalog Number: 2113B-BDB-6P-7FE3EDGN3GD-17-37TGA-79UT-106-751HS-790B**
Size: NEMA Size 1
Total Space Factor = 1
Wiring: NEMA Type B wiring
Circuit Breaker: Instantaneous MCP, 65kA at 480V (G8P Frame) (7A Trip)
Control: Transformer with Secondary Fuse, Standard Capacity, Primary Fusing, 120V/60Hz
Control Wiring: #16 AWG MTW(TEW) Cu

**Features Included**
Std Capacity Control Power Transformer W/Primary Fuses (-6P)
Contactor Surge Suppressor (-17)
Unit Grd Stab Tin Plated Cu (-79UT)
Omit Power Terminal Blocks (-106)
Heat Shrink Type Markers (-751HS)
2 Aux and 1 Alarm-Internal-CB (-790B)

**Unit Loc: 06A** **Del Prog: SCII**
**Unit ID: 5**
VFD - PowerFlex 753 AC Drive w/CB

**Rating**
75 HP
(Normal Duty)

**Name Plate Information**
ODOR
CONTROL
FAN
FAN-1290

**Ethernet Information**

| Device Type | IP Address | Subnet Mask |
|---|---|---|
| 2163U | 192.168.1.15 | 255.255.255.0 |

Cable Length : 3.33 m

PowerFlex 753 Firmware Version : LATEST

**Catalog Number: 2163UB-096NJB-14DA2R1-14DFLPJ-14GER-14HC6S-14RLX-49TJM-751HS**
Total Space Factor = 6
Wiring: NEMA Type B wiring
Output Current Rating: 96A
Circuit Breaker: Thermal Magnetic, 100kA at 480V (J6F Frame) (250A Trip)
Human Interface Module: LCD Door disply-num.kypad(753) - Door Mounted
Control: Transformer with Secondary Fuse, Standard Capacity, Primary Fusing, 120V/60Hz
Control Wiring: #16 AWG MTW(TEW) Cu

**Features Included**
Drive 120VAC w/ I/O (-14DA2R1)
Drive input fuses - Bussman (-14DFLPJ)
Dualport Ethernet (for VFD) (-14GER)
Drive Line Reactor (-14RLX)
Heat Shrink Type Markers (-751HS)

| | |
|---|---|
| **Unit Loc: 07A** **Del Prog: PEII**<br>**Unit ID: 15**<br>ENSW - Stratix 5700 20-Port<br><br>**Wiring Diagram**<br>10003468745<br><br>**Ethernet Information**<br>Device Type: 2100-ESW<br>IP Address: 192.168.1.14<br>Subnet Mask: 255.255.255.0<br><br>Cable Length : 2.26 m<br><br>Ethernet Switch Firmware Version : LATEST | **Catalog Number: 2100-ESW20J-T10FAP-751HS**<br>Total Space Factor = 1<br>Full Stratix 5700 Firmware<br>Power Adapters (w/Unit Mtg)<br><br>**Features Included**<br>Heat Shrink Type Markers (-751HS) |
| **Unit Loc: 07C** **Del Prog: SCII**<br>**Unit ID: 17**<br>FCB - Feeder Circuit Breaker<br><br>**Rating**<br>15A<br><br>**Wiring Diagram**<br>10004092272<br><br>**Name Plate Information**<br>BOILER UNIT<br>NO. 3<br>B-1273<br><br>**Overload Relay(s)**<br>Motor Full Load Current (FLC) = Not Available | **Catalog Number: 2193F-AJB-30TGM-79UT**<br>Total Space Factor = 1<br>Circuit Breaker: Thermal Magnetic, 65kA at 480V (15) with Frame Rating of 125A (G6C Frame), Plug-In Unit, 15A Trip<br>Lugs Supplied: Std Mech/Lug Pads, 1/0 AWG Size Wire, 1 Cables per Phase<br><br>**Features Included**<br>Unit Grd Stab Tin Plated Cu (-79UT) |
| **Unit Loc: 07E** **Del Prog: SCII**<br>**Unit ID: 6**<br>VFD - PowerFlex 753 AC Drive w/CB<br><br>**Rating**<br>30 HP<br>(Normal Duty)<br><br>**Name Plate Information**<br>DRYER<br>FEED CAKE<br>PUMP NO. 1<br>PMP-1250<br><br>**Ethernet Information**<br>Device Type: 2163U<br>IP Address: 192.168.1.16<br>Subnet Mask: 255.255.255.0<br><br>Cable Length : 3.43 m<br><br>PowerFlex 753 Firmware Version : LATEST | **Catalog Number: 2163UB-040NJB-14DA2R1-14GER-14HC6S-14RLX-45TGM-79UT-751HS**<br>Total Space Factor = 4<br>Wiring: NEMA Type B wiring<br>Output Current Rating: 40A<br>Circuit Breaker: Thermal Magnetic, 65kA at 480V (G6C Frame) (100A Trip)<br>Human Interface Module: LCD Door disply-num.kypad(753) - Door Mounted<br>Control: Transformer with Secondary Fuse, Standard Capacity, Primary Fusing, 120V/60Hz<br>Control Wiring: #16 AWG MTW(TEW) Cu<br><br>**Features Included**<br>Drive 120VAC w/ I/O (-14DA2R1)<br>Dualport Ethernet (for VFD) (-14GER)<br>Drive Line Reactor (-14RLX)<br>Unit Grd Stab Tin Plated Cu (-79UT)<br>Heat Shrink Type Markers (-751HS) |

| | |
|---|---|
| **Unit Loc: 08A** **Del Prog: SCII**<br>**Unit ID: 2**<br>SPD - Surge Protective Device Unit | **Catalog Number: 2100-SPJB-1-79UT-751M**<br>Total Space Factor = 0.5<br>Surge Protector Type: Wye w/solidly grd neut, 3-wire<br><br>**Features Included**<br>Unit Grd Stab Tin Plated Cu (-79UT)<br>Mylar Device Markers (-751M) |
| **Unit Loc: 08B** **Del Prog: SCII**<br>**Unit ID: 12**<br>FVNR - Full Voltage Non-Reversing Starter w/CB<br><br>**Rating**<br>1 HP<br><br>**Name Plate Information**<br>RECIRCULATION<br>PUMP HEAT<br>RECOVERY<br>PMP-1277<br><br>**Overload Relay(s)**<br>E300 Comm Based Overload (7FE3)<br>E300 Communication Option = EtherNet/IP<br>E300 Voltage Code = 120V AC<br>E300 Control Module = Ground Fault & PTC<br>E300 Sensing Module = 0.5-30A Current/Ground Fault<br>E300 Operator Station = Diagnostic Station<br>E300 Expansion Module = Not Available<br>Motor RPM = 1800<br>Motor Full Load Current (FLC) = 1.84<br>Motor Service Factor = 1.15<br><br>**Ethernet Information**<br>Device Type: 2113<br>IP Address: 192.168.1.17<br>Subnet Mask: 255.255.255.0<br><br>Cable Length : 1.97 m<br><br>E300 Overload Firmware Version : LATEST | **Catalog Number: 2113B-BDB-6P-7FE3EDGN3GD-17-35TGA-79UT-106-751HS-790B**<br>Size: NEMA Size 1<br>Total Space Factor = 1<br>Wiring: NEMA Type B wiring<br>Circuit Breaker: Instantaneous MCP, 65kA at 480V (G8P Frame) (3A Trip)<br>Control: Transformer with Secondary Fuse, Standard Capacity, Primary Fusing, 120V/60Hz<br>Control Wiring: #16 AWG MTW(TEW) Cu<br><br>**Features Included**<br>Std Capacity Control Power Transformer W/Primary Fuses (-6P)<br>Contactor Surge Suppressor (-17)<br>Unit Grd Stab Tin Plated Cu (-79UT)<br>Omit Power Terminal Blocks (-106)<br>Heat Shrink Type Markers (-751HS)<br>2 Aux and 1 Alarm-Internal-CB (-790B) |
| **Unit Loc: 08D** **Del Prog: SCII**<br>**Unit ID: 26**<br>DOOR - Blank Unit Door | **Catalog Number: 2100-BJ05**<br>Total Space Factor = 0.5 |

| | |
|---|---|
| **Unit Loc: 08E** **Del Prog: SCII**<br>**Unit ID: 25**<br>VFD - PowerFlex 525 AC Drive w/CB<br><br>**Rating**<br>3 HP<br><br>**Wiring Diagram**<br>10003912431<br><br>**Name Plate Information**<br>CAKE STORAGE BIN<br>LIVE BOTTOM SCREW 2<br>SC-1256<br><br>**Ethernet Information**<br>Device Type: 2163W<br>IP Address: 192.168.1.18<br>Subnet Mask: 255.255.255.0<br><br>Cable Length : 3.2 m<br><br>PowerFlex 525 Firmware Version : LATEST | **Catalog Number: 2163WB-6P0JB-14DFCC-14HC2S-14RLX-38TGM-79UT-751HS**<br>Total Space Factor = 2<br>Wiring: NEMA Type B wiring<br>Output Current Rating: 6A<br>Circuit Breaker: Thermal Magnetic, 65kA at 480V (G6C Frame) (15A Trip)<br>Human Interface Module: LCD Door display,digitl keypad - Door Mounted<br>Control: Transformer with Secondary Fuse, Standard Capacity, Primary Fusing, 120V/60Hz<br>Control Wiring: #16 AWG MTW(TEW) Cu<br><br>**Features Included**<br>Drive I/P fuses - Class CC (-14DFCC)<br>Drive Line Reactor (-14RLX)<br>Unit Grd Stab Tin Plated Cu (-79UT)<br>Heat Shrink Type Markers (-751HS) |
| **Unit Loc: 08J** **Del Prog: SCII**<br>**Unit ID: 24**<br>VFD - PowerFlex 525 AC Drive w/CB<br><br>**Rating**<br>3 HP<br><br>**Wiring Diagram**<br>10003912431<br><br>**Name Plate Information**<br>CAKE STORAGE BIN<br>LIVE BOTTOM SCREW 1<br>SC-1255<br><br>**Ethernet Information**<br>Device Type: 2163W<br>IP Address: 192.168.1.19<br>Subnet Mask: 255.255.255.0<br><br>Cable Length : 3.86 m<br><br>PowerFlex 525 Firmware Version : LATEST | **Catalog Number: 2163WB-6P0JB-14DFCC-14HC2S-14RLX-38TGM-79UT-751HS**<br>Total Space Factor = 2<br>Wiring: NEMA Type B wiring<br>Output Current Rating: 6A<br>Circuit Breaker: Thermal Magnetic, 65kA at 480V (G6C Frame) (15A Trip)<br>Human Interface Module: LCD Door display,digitl keypad - Door Mounted<br>Control: Transformer with Secondary Fuse, Standard Capacity, Primary Fusing, 120V/60Hz<br>Control Wiring: #16 AWG MTW(TEW) Cu<br><br>**Features Included**<br>Drive I/P fuses - Class CC (-14DFCC)<br>Drive Line Reactor (-14RLX)<br>Unit Grd Stab Tin Plated Cu (-79UT)<br>Heat Shrink Type Markers (-751HS) |
| **Unit Loc: 09A** **Del Prog: SCII**<br>**Unit ID: 23**<br>DOOR - Blank Unit Door | **Catalog Number: 2100-BJ10**<br>Total Space Factor = 1 |
| **Unit Loc: 09C** **Del Prog: SCII**<br>**Unit ID: 23**<br>DOOR - Blank Unit Door | **Catalog Number: 2100-BJ10**<br>Total Space Factor = 1 |
| **Unit Loc: 09E** **Del Prog: SCII**<br>**Unit ID: 27**<br>DOOR - Blank Unit Door | **Catalog Number: 2100-BJ10**<br>Total Space Factor = 1 |

| | |
|---|---|
| **Unit Loc: 09G** **Del Prog: SCII**<br>**Unit ID: 27**<br>DOOR - Blank Unit Door | **Catalog Number: 2100-BJ10**<br>Total Space Factor = 1 |
| **Unit Loc: 09J** **Del Prog: SCII**<br>**Unit ID: 27**<br>DOOR - Blank Unit Door | **Catalog Number: 2100-BJ10**<br>Total Space Factor = 1 |
| **Unit Loc: 09L** **Del Prog: SCII**<br>**Unit ID: 27**<br>DOOR - Blank Unit Door | **Catalog Number: 2100-BJ10**<br>Total Space Factor = 1 |

MCC6

# Rockwell Automation

## Centerline 2100 Motor Control Center

## Structure and Unit Specifications

Network Type: Ethernet
Unit Diagram Location: Central location
Services Selected: Startup Services

### STANDARD STRUCTURE / SECTION SPECIFICATIONS

Line Voltage / Frequency: 480 Volts / 60 Hertz
Class I Wiring Type: B-D Control Terminal Blocks Only
NEMA Enclosure Type: 12 - Fully Gasketed with Bottom Plates

| QTY | STANDARD STRUCTURE / SECTION SPECIFICATION | DELIV PROG |
|---|---|---|
| 1 | POWER SYSTEM - WYE, 3-PHASE, 3-WIRE WITH SOLIDLY GROUNDED NEUTRAL | SCII |
| 4 | GRD BUS SPLICE, (1) 0.25" × 1" (CU/TIN) | SCII |
| 4 | HORIZ PWR BUS SPLICE, 600A, CU/TIN | SCII |
| 11 | DIRECT ENET CABLING (NO ENET VWW ADAPTERS), 24V CABLING W/ 24V VWW ADAPTERS | SCII |
| 11 | SECT DEPTH 20" | SCII |
| 11 | NEMA ENCL TYPE 12 (FULLY GASKETED, DOORS AND REMOVEABLE COVERS) | SCII |
| 11 | BASE SECTION | SCII |
| 11 | HORIZ GRD BUS, 0.25" X 1" CU/TIN | SCII |
| 11 | HORIZ PWR BUS, 600A, CU/TIN | SCII |
| 11 | BUS BRACING 65KA RMS SYMMETRICAL | SCII |
| 11 | VERT PWR BUS, 300A, CU/TIN | SCII |
| 11 | VERT GRD BUS, PLUG-IN, CU/TIN | SCII |
| 11 | WIREWAY TIE BAR(S) | SCII |

### STARTER / UNIT SPECIFICATIONS

| ID | QTY | CATALOG NUMBER | SPACE FACTOR | DELIV PROG |
|---|---|---|---|---|
| 1 | 1 | 2191MB-BJC-52-52M-85ECBB | 1 | SC |
| 2 | 1 | 2100-SPJB-1-79UT-751M | 0.5 | SC |
| 3 | 1 | 2163WB-017JB-14DFCC-14HC2S-14RLX-41TGM-79UT | 3 | SC |
| 4 | 1 | 2113B-BDB-6XP-7FE3EDGN3GD-39TGA-79UT-106-751HS | 1 | SC |
| 5 | 1 | 2107B-BDB-6P-7FE3EDGN3GD-18A-38TGA-79UT-106-751HS | 1.5 | SC |
| 6 | 1 | 2193F-AJB-32TGM-79UT | 1 | SC |

| | | | | |
|---|---|---|---|---|
| 7 | 1 | 2163WB-017JB-14DFCC-14HC2S-14RLX-41TGM-79UT | 3 | SC |
| 8 | 1 | 2193F-AJB-30TGM-79UT | 1 | SC |
| 9 | 1 | 2163WB-013JB-14DFCC-14HC2S-14RLX-40TGM-79UT | 2.5 | SC |
| 10 | 1 | 2163WB-010JB-14DFCC-14HC2S-14RLX-39TGM-79UT | 2.5 | SC |
| 11 | 1 | 2163WB-017JB-14DFCC-14HC2S-14RLX-41TGM-79UT | 3 | SC |
| 12 | 1 | 2163WB-017JB-14DFCC-14HC2S-14RLX-41TGM-79UT | 3 | SC |
| 13 | 1 | 2163WB-4P0JB-14DFCC-14HC2S-14RLX-37TGM-79UT | 2 | SC |
| 14 | 2 | 2163WB-017JB-14DFCC-14HC2S-14RLX-41TGM-79UT | 3 | SC |
| 15 | 1 | 2163WB-4P0JB-14DFCC-14HC2S-14RLX-37TGM-79UT | 2 | SC |
| 16 | 2 | 2163WB-017JB-14DFCC-14HC2S-14RLX-41TGM-79UT | 3 | SC |
| 17 | 1 | 2163WB-4P0JB-14DFCC-14HC2S-14RLX-36TGM-79UT | 2 | SC |
| 18 | 1 | 2113B-CDB-6XP-7FE3EDGN6GD-42TGA-79UT-91-90000-106-751HS-790B | 1 | SC |
| 19 | 1 | 2163WB-2P3JB-14DFCC-14HC2S-14RLX-35TGM-79UT | 2 | SC |
| 20 | 2 | 2163WB-017JB-14DFCC-14HC2S-14RLX-41TGM-79UT | 3 | SC |
| 21 | 3 | 2193F-AJB-30TGM-79UT | 1 | SC |
| 22 | 1 | 2100-BJ05 | 0.5 | SC |
| 23 | 1 | 2100-EPS8JBH-30TGM-79UT | 1 | SC |
| 24 | 1 | 2100-ESW20J-T10LAP | 1 | SC |
| 25 | 1 | 2100-ESW20J-T10LAP | 1 | SC |
| 26 | 1 | 2190-CJB-52M-79UT-86W54CXB | 1.5 | SC |
| 27 | 1 | 2193F-AJB-30TGM-79UT | 1 | SC |
| 28 | 1 | 2113B-BDB-6XP-7FE3EDGN3GD-37TGA-79UT-91-90000-106-751HS-790B | 1 | SC |
| 29 | 1 | 2113B-CDB-6XP-7FE3EDGN6GD-43TGA-79UT-91-90000-106-751HS-790B | 1 | SC |
| 30 | 1 | 2163WB-017JB-14DFCC-14HC2S-14RLX-41TGM-79UT | 3 | SC |
| 31 | 1 | 2163WB-1P4JB-14DFCC-14HC2S-14RLX-33TGM-79UT | 2 | SC |

| | | |
|---|---|---|
| | | DOCUMENTATION - CENTRAL LOCATION |

| | | | |
|---|---|---|---|
| | 36 | Acrylic - Black letters on white | SC |

---

Total Space Factors Used = 66

Delivery Program Type = SCII

MCC6

# Rockwell Automation

## Centerline 2100 Motor Control Center

## Wiring Diagrams

| Unit Id | Type | Qty | Catalog Number | HP/ KW | CTO Wiring Diagram |
|---|---|---|---|---|---|
| 1 | MLUG | 1 | 2191MB-BJC-52-52M-85ECBB | - | - |
| 2 | SPD | 1 | 2100-SPJB-1-79UT-751M | - | - |
| 3 | VFD | 1 | 2163WB-017JB-14DFCC-14HC2S-14RLX-41TGM-79UT | 10 HP | 10002409909 |
| 4 | FVNR | 1 | 2113B-BDB-6XP-7FE3EDGN3GD-39TGA-79UT-106-751HS | 5 HP | - |
| 5 | FVR | 1 | 2107B-BDB-6P-7FE3EDGN3GD-18A-38TGA-79UT-106-751HS | 3 HP | - |
| 6 | FCB | 1 | 2193F-AJB-32TGM-79UT | - | 10004011415 |
| 7 | VFD | 1 | 2163WB-017JB-14DFCC-14HC2S-14RLX-41TGM-79UT | 10 HP | 10002409909 |
| 8 | FCB | 1 | 2193F-AJB-30TGM-79UT | - | 10004092272 |
| 9 | VFD | 1 | 2163WB-013JB-14DFCC-14HC2S-14RLX-40TGM-79UT | 7.5 HP | - |
| 10 | VFD | 1 | 2163WB-010JB-14DFCC-14HC2S-14RLX-39TGM-79UT | 5 HP | 10004708859 |
| 11 | VFD | 1 | 2163WB-017JB-14DFCC-14HC2S-14RLX-41TGM-79UT | 10 HP | 10002409909 |
| 12 | VFD | 1 | 2163WB-017JB-14DFCC-14HC2S-14RLX-41TGM-79UT | 10 HP | 10002409909 |
| 13 | VFD | 1 | 2163WB-4P0JB-14DFCC-14HC2S-14RLX-37TGM-79UT | 2 HP | - |
| 14 | VFD | 2 | 2163WB-017JB-14DFCC-14HC2S-14RLX-41TGM-79UT | 10 HP | 10002409909 |
| 15 | VFD | 1 | 2163WB-4P0JB-14DFCC-14HC2S-14RLX-37TGM-79UT | 2 HP | - |
| 16 | VFD | 2 | 2163WB-017JB-14DFCC-14HC2S-14RLX-41TGM-79UT | 10 HP | 10002409909 |
| 17 | VFD | 1 | 2163WB-4P0JB-14DFCC-14HC2S-14RLX-36TGM-79UT | 1.5 HP | 10002409911 |
| 18 | FVNR | 1 | 2113B-CDB-6XP-7FE3EDGN6GD-42TGA-79UT-91-90000-106-751HS-790B | 15 HP | - |
| 19 | VFD | 1 | 2163WB-2P3JB-14DFCC-14HC2S-14RLX-35TGM-79UT | 1 HP | - |
| 20 | VFD | 2 | 2163WB-017JB-14DFCC-14HC2S-14RLX-41TGM-79UT | 10 HP | 10002409909 |
| 21 | FCB | 3 | 2193F-AJB-30TGM-79UT | - | - |
| 22 | DOOR | 1 | 2100-BJ05 | - | 10002177625 |
| 23 | ENPS | 1 | 2100-EPS8JBH-30TGM-79UT | - | 10004444669 |
| 24 | ENSW | 1 | 2100-ESW20J-T10LAP | - | 10001898436 |
| 25 | ENSW | 1 | 2100-ESW20J-T10LAP | - | 10001898436 |
| 26 | METR | 1 | 2190-CJB-52M-79UT-86W54CXB | - | 10004657357 |
| 27 | FCB | 1 | 2193F-AJB-30TGM-79UT | - | 10004092272 |
| 28 | FVNR | 1 | 2113B-BDB-6XP-7FE3EDGN3GD-37TGA-79UT-91-90000-106-751HS-790B | 2 HP | - |
| 29 | FVNR | 1 | 2113B-CDB-6XP-7FE3EDGN6GD-43TGA-79UT-91-90000-106-751HS-790B | 20 HP | - |

| | | | | | |
|---|---|---|---|---|---|
| 30 | VFD | 1 | 2163WB-017JB-14DFCC-14HC2S-14RLX-41TGM-79UT | 10 HP | 10002409909 |
| 31 | VFD | 1 | 2163WB-1P4JB-14DFCC-14HC2S-14RLX-33TGM-79UT | 0.5 HP | - |

MCC6

# Rockwell Automation

## Centerline 2100 Motor Control Center

## Unit Description

### General Information

| | |
|---|---|
| Line Voltage / Frequency: | 480 Volts / 60 Hertz |
| Power System Configuration: | Wye, 3-phase, 3-wire with solidly grounded neutral |
| Class I Wiring Type: | B-D Control Terminal Blocks Only |
| NEMA Enclosure Type: | 12 - Fully Gasketed with Bottom Plates |
| Available Fault Current: | 50,001 to 65,000 A |
| Unit Nameplate Type: | Acrylic - Black letters on white |
| Delivery Program: | SCII |

### Unit Information

| Description | Unit Features |
|---|---|
| **Unit Loc: 01A** **Del Prog: SCII**<br>**Unit ID: 2**<br>SPD - Surge Protective Device Unit | **Catalog Number: 2100-SPJB-1-79UT-751M**<br>Total Space Factor = 0.5<br>Surge Protector Type: Wye w/solidly grd neut, 3-wire<br><br>**Features Included**<br>Unit Grd Stab Tin Plated Cu (-79UT)<br>Mylar Device Markers (-751M) |
| **Unit Loc: 01B** **Del Prog: SCII**<br>**Unit ID: 22**<br>DOOR - Blank Unit Door | **Catalog Number: 2100-BJ05**<br>Total Space Factor = 0.5 |
| **Unit Loc: 01C** **Del Prog: SCII**<br>**Unit ID: 21**<br>FCB - Feeder Circuit Breaker<br>Extra Breaker<br><br>**Rating**<br>15A<br><br>**Wiring Diagram**<br>10004092272<br><br>**Name Plate Information**<br>BOILER<br>PANEL<br><br>**Overload Relay(s)**<br>Motor Full Load Current (FLC) = Not Available | **Catalog Number: 2193F-AJB-30TGM-79UT**<br>Total Space Factor = 1<br>Circuit Breaker: Thermal Magnetic, 65kA at 480V (15) with Frame Rating of 125A (Frame), Plug-In Unit, 15A Trip<br>Lugs Supplied: Std Mech/Lug Pads, 1/0 AWG Size Wire, 1 Cables per Phase<br><br>**Features Included**<br>Unit Grd Stab Tin Plated Cu (-79UT) |

| | |
|---|---|
| **Unit Loc: 01E** **Del Prog: SCII**<br>**Unit ID: 21**<br>FCB - Feeder Circuit Breaker<br><br>**Rating**<br>15A<br>10amp per srubber mfg, 15A smallest size<br><br>**Wiring Diagram**<br>10004092272<br><br>**Name Plate Information**<br>SCRUBBER<br>PANEL<br><br>**Overload Relay(s)**<br>Motor Full Load Current (FLC) = Not Available | **Catalog Number: 2193F-AJB-30TGM-79UT**<br>Total Space Factor = 1<br>Circuit Breaker: Thermal Magnetic, 65kA at 480V (15) with Frame Rating of 125A (G6C Frame), Plug-In Unit, 15A Trip<br>Lugs Supplied: Std Mech/Lug Pads, 1/0 AWG Size Wire, 1 Cables per Phase<br><br>**Features Included**<br>Unit Grd Stab Tin Plated Cu (-79UT) |
| **Unit Loc: 01G** **Del Prog: SCII**<br>**Unit ID: 21**<br>FCB - Feeder Circuit Breaker<br><br>**Rating**<br>15A<br><br>**Wiring Diagram**<br>10004092272<br>Spare Breaker<br><br>**Name Plate Information**<br>DRAG<br>CONVEYOR<br>PANEL<br><br>**Overload Relay(s)**<br>Motor Full Load Current (FLC) = Not Available | **Catalog Number: 2193F-AJB-30TGM-79UT**<br>Total Space Factor = 1<br>Circuit Breaker: Thermal Magnetic, 65kA at 480V (15) with Frame Rating of 125A (G6C Frame), Plug-In Unit, 15A Trip<br>Lugs Supplied: Std Mech/Lug Pads, 1/0 AWG Size Wire, 1 Cables per Phase<br><br>**Features Included**<br>Unit Grd Stab Tin Plated Cu (-79UT) |
| **Unit Loc: 01J** **Del Prog: SCII**<br>**Unit ID: 6**<br>FCB - Feeder Circuit Breaker<br><br>**Rating**<br>30A<br><br>**Wiring Diagram**<br>10004011415<br><br>**Name Plate Information**<br>TUBULAR<br>DRAG<br>CONVEYOR<br>POWER<br><br>**Overload Relay(s)**<br>Motor Full Load Current (FLC) = Not Available | **Catalog Number: 2193F-AJB-32TGM-79UT**<br>Total Space Factor = 1<br>Circuit Breaker: Thermal Magnetic, 65kA at 480V (30) with Frame Rating of 125A (G6C Frame), Plug-In Unit, 30A Trip<br>Lugs Supplied: Std Mech/Lug Pads, 1/0 AWG Size Wire, 1 Cables per Phase<br><br>**Features Included**<br>Unit Grd Stab Tin Plated Cu (-79UT) |

**Unit Loc: 01L** **Del Prog: SCII**
**Unit ID: 1**
MLUG - Main Incoming Lug Compartment

**Rating**
600A

**Catalog Number: 2191MB-BJC-52-52M-85ECBB**
Total Space Factor = 1
Lug Compartment: 600A 1.0 space factor, Bottom Mounted
Lugs Supplied: None Supplied
Neutral Lugs Supplied: None Selected
Metering Type: Ammeter/Voltmeter w/Sw (3 CT)

**Features Included**
Ammeter 600A Scale (-52M)

---

**Unit Loc: 02A** **Del Prog: SCII**
**Unit ID: 11**
VFD - PowerFlex 525 AC Drive w/CB

**Rating**
10 HP

**Wiring Diagram**
10002409909

**Name Plate Information**
SEGMENT
PROCESS
AIR FAN
FAN-1260A

**Ethernet Information**

| Device Type | IP Address | Subnet Mask |
|---|---|---|
| 2163W | 192.168.1.4 | 255.255.255.0 |

Cable Length : 3.05 m

PowerFlex 525 Firmware Version : LATEST

**Catalog Number: 2163WB-017JB-14DFCC-14HC2S-14RLX-41TGM-79UT**
Total Space Factor = 3
Wiring: NEMA Type B wiring
Output Current Rating: 17A
Circuit Breaker: Thermal Magnetic, 65kA at 480V (G6C Frame) (30A Trip)
Human Interface Module: LCD Door display,digitl keypad - Door Mounted
Control: Transformer with Secondary Fuse, Standard Capacity, Primary Fusing, 120V/60Hz
Control Wiring: #16 AWG MTW(TEW) Cu

**Features Included**
Drive I/P fuses - Class CC (-14DFCC)
Drive Line Reactor (-14RLX)
Unit Grd Stab Tin Plated Cu (-79UT)

---

**Unit Loc: 02G** **Del Prog: SCII**
**Unit ID: 7**
VFD - PowerFlex 525 AC Drive w/CB

**Rating**
10 HP

**Wiring Diagram**
10002409909

**Name Plate Information**
SEGMENT
PROCESS
FAN
FAN-1260M

**Ethernet Information**

| Device Type | IP Address | Subnet Mask |
|---|---|---|
| 2163W | 192.168.1.5 | 255.255.255.0 |

Cable Length : 4.04 m

PowerFlex 525 Firmware Version : LATEST

**Catalog Number: 2163WB-017JB-14DFCC-14HC2S-14RLX-41TGM-79UT**
Total Space Factor = 3
Wiring: NEMA Type B wiring
Output Current Rating: 17A
Circuit Breaker: Thermal Magnetic, 65kA at 480V (G6C Frame) (30A Trip)
Human Interface Module: LCD Door display,digitl keypad - Door Mounted
Control: Transformer with Secondary Fuse, Standard Capacity, Primary Fusing, 120V/60Hz
Control Wiring: #16 AWG MTW(TEW) Cu

**Features Included**
Drive I/P fuses - Class CC (-14DFCC)
Drive Line Reactor (-14RLX)
Unit Grd Stab Tin Plated Cu (-79UT)

**Unit Loc: 03A** **Del Prog: SCII**
**Unit ID: 14**
VFD - PowerFlex 525 AC Drive w/CB

**Rating**
10 HP

**Wiring Diagram**
10002409909

**Name Plate Information**
SEGMENT
PROCESS
AIR FAN
FAN-1260C

**Ethernet Information**

| Device Type | IP Address | Subnet Mask |
|---|---|---|
| 2163W | 192.168.1.6 | 255.255.255.0 |

Cable Length : 2.54 m

PowerFlex 525 Firmware Version : LATEST

**Catalog Number: 2163WB-017JB-14DFCC-14HC2S-14RLX-41TGM-79UT**
Total Space Factor = 3
Wiring: NEMA Type B wiring
Output Current Rating: 17A
Circuit Breaker: Thermal Magnetic, 65kA at 480V (G6C Frame) (30A Trip)
Human Interface Module: LCD Door display,digitl keypad - Door Mounted
Control: Transformer with Secondary Fuse, Standard Capacity, Primary Fusing, 120V/60Hz
Control Wiring: #16 AWG MTW(TEW) Cu

**Features Included**
Drive I/P fuses - Class CC (-14DFCC)
Drive Line Reactor (-14RLX)
Unit Grd Stab Tin Plated Cu (-79UT)

**Unit Loc: 03G** **Del Prog: SCII**
**Unit ID: 12**
VFD - PowerFlex 525 AC Drive w/CB

**Rating**
10 HP

**Wiring Diagram**
10002409909

**Name Plate Information**
SEGMENT
PROCESS
AIR FAN
FAN-1260B

**Ethernet Information**

| Device Type | IP Address | Subnet Mask |
|---|---|---|
| 2163W | 192.168.1.7 | 255.255.255.0 |

Cable Length : 3.53 m

PowerFlex 525 Firmware Version : LATEST

**Catalog Number: 2163WB-017JB-14DFCC-14HC2S-14RLX-41TGM-79UT**
Total Space Factor = 3
Wiring: NEMA Type B wiring
Output Current Rating: 17A
Circuit Breaker: Thermal Magnetic, 65kA at 480V (G6C Frame) (30A Trip)
Human Interface Module: LCD Door display,digitl keypad - Door Mounted
Control: Transformer with Secondary Fuse, Standard Capacity, Primary Fusing, 120V/60Hz
Control Wiring: #16 AWG MTW(TEW) Cu

**Features Included**
Drive I/P fuses - Class CC (-14DFCC)
Drive Line Reactor (-14RLX)
Unit Grd Stab Tin Plated Cu (-79UT)

**Unit Loc: 04A** **Del Prog: SCII**
**Unit ID: 24**
ENSW - Stratix 5700 20-Port

**Wiring Diagram**
10001898436

**Ethernet Information**

| Device Type | IP Address | Subnet Mask |
|---|---|---|
| 2100-ESW | 192.168.1.1 | 255.255.255.0 |

No Cable Length

Ethernet Switch Firmware Version : LATEST

**Catalog Number: 2100-ESW20J-T10LAP**
Total Space Factor = 1
Lite Stratix 5700 Firmware
Power Adapters (w/Unit Mtg)

---

**Unit Loc: 04C** **Del Prog: SCII**
**Unit ID: 9**
VFD - PowerFlex 525 AC Drive w/CB

**Rating**
7.5 HP

**Name Plate Information**
EXTRUDER
CUTTING
DRIVE
EXT-1260B

**Ethernet Information**

| Device Type | IP Address | Subnet Mask |
|---|---|---|
| 2163W | 192.168.1.8 | 255.255.255.0 |

Cable Length : 2.61 m

PowerFlex 525 Firmware Version : LATEST

**Catalog Number: 2163WB-013JB-14DFCC-14HC2S-14RLX-40TGM-79UT**
Total Space Factor = 2.5
Wiring: NEMA Type B wiring
Output Current Rating: 13A
Circuit Breaker: Thermal Magnetic, 65kA at 480V (G6C Frame) (30A Trip)
Human Interface Module: LCD Door display,digitl keypad - Door Mounted
Control: Transformer with Secondary Fuse, Standard Capacity, Primary Fusing, 120V/60Hz
Control Wiring: #16 AWG MTW(TEW) Cu

**Features Included**
Drive I/P fuses - Class CC (-14DFCC)
Drive Line Reactor (-14RLX)
Unit Grd Stab Tin Plated Cu (-79UT)

---

**Unit Loc: 04H** **Del Prog: SCII**
**Unit ID: 26**
METR - Metering Unit

**Wiring Diagram**
10004657357

**Ethernet Information**

| Device Type | IP Address | Subnet Mask |
|---|---|---|
| 2190 | 192.168.1.2 | 255.255.255.0 |
| 2190 | 192.168.1.3 | 255.255.255.0 |

Cable Length : 2.82 m

Power Monitor Firmware Version : LATEST

**Catalog Number: 2190-CJB-52M-79UT-86W54CXB**
Total Space Factor = 1.5
Metering Type: Bul 1426-M5 PM 5000 w/Ethernet
Ammeter Scale 600

**Features Included**
Unit Grd Stab Tin Plated Cu (-79UT)

| | |
|---|---|
| **Unit Loc: 04L** **Del Prog: SCII**<br>**Unit ID: 23**<br>ENPS - Ethernet Power Supply Unit<br><br>**Rating**<br>125A<br><br>**Wiring Diagram**<br>10004444669 | **Catalog Number: 2100-EPS8JBH-30TGM-79UT**<br>Total Space Factor = 1<br>Circuit Breaker: Thermal Magnetic, 65kA at 480V (G6C Frame) (15A Trip)<br>Disconnect Type = Circuit Breaker<br>Control: Transformer with Secondary Fuse, Standard Capacity, Primary Fusing, V/60Hz<br>Control Wiring: #16 AWG MTW(TEW) Cu<br><br>**Features Included**<br>Unit Grd Stab Tin Plated Cu (-79UT) |
| **Unit Loc: 05A** **Del Prog: SCII**<br>**Unit ID: 20**<br>VFD - PowerFlex 525 AC Drive w/CB<br><br>**Rating**<br>10 HP<br><br>**Wiring Diagram**<br>10002409909<br><br>**Name Plate Information**<br>SEGMENT<br>PROCESS<br>AIR FAN<br>FAN -1260G<br><br>**Ethernet Information**<br>Device Type: 2163W<br>IP Address: 192.168.1.9<br>Subnet Mask: 255.255.255.0<br><br>Cable Length : 3.05 m<br><br>PowerFlex 525 Firmware Version : LATEST | **Catalog Number: 2163WB-017JB-14DFCC-14HC2S-14RLX-41TGM-79UT**<br>Total Space Factor = 3<br>Wiring: NEMA Type B wiring<br>Output Current Rating: 17A<br>Circuit Breaker: Thermal Magnetic, 65kA at 480V (G6C Frame) (30A Trip)<br>Human Interface Module: LCD Door display,digitl keypad - Door Mounted<br>Control: Transformer with Secondary Fuse, Standard Capacity, Primary Fusing, 120V/60Hz<br>Control Wiring: #16 AWG MTW(TEW) Cu<br><br>**Features Included**<br>Drive I/P fuses - Class CC (-14DFCC)<br>Drive Line Reactor (-14RLX)<br>Unit Grd Stab Tin Plated Cu (-79UT) |

**Unit Loc: 05G** **Del Prog: SCII**
**Unit ID: 16**
VFD - PowerFlex 525 AC Drive w/CB

**Rating**
10 HP

**Wiring Diagram**
10002409909

**Name Plate Information**
SEGMENT
PROCESS
AIR FAN
FAN-1260F

**Ethernet Information**

| Device Type | IP Address | Subnet Mask |
|---|---|---|
| 2163W | 192.168.1.10 | 255.255.255.0 |

Cable Length : 4.04 m

PowerFlex 525 Firmware Version : LATEST

**Catalog Number: 2163WB-017JB-14DFCC-14HC2S-14RLX-41TGM-79UT**
Total Space Factor = 3
Wiring: NEMA Type B wiring
Output Current Rating: 17A
Circuit Breaker: Thermal Magnetic, 65kA at 480V (G6C Frame) (30A Trip)
Human Interface Module: LCD Door display,digitl keypad - Door Mounted
Control: Transformer with Secondary Fuse, Standard Capacity, Primary Fusing, 120V/60Hz
Control Wiring: #16 AWG MTW(TEW) Cu

**Features Included**
Drive I/P fuses - Class CC (-14DFCC)
Drive Line Reactor (-14RLX)
Unit Grd Stab Tin Plated Cu (-79UT)

**Unit Loc: 06A** **Del Prog: SCII**
**Unit ID: 30**
VFD - PowerFlex 525 AC Drive w/CB

**Rating**
10 HP

Spare Fan VFD

**Wiring Diagram**
10002409909

**Ethernet Information**

| Device Type | IP Address | Subnet Mask |
|---|---|---|
| 2163W | 192.168.1.11 | 255.255.255.0 |

Cable Length : 3.56 m

PowerFlex 525 Firmware Version : LATEST

**Catalog Number: 2163WB-017JB-14DFCC-14HC2S-14RLX-41TGM-79UT**
Total Space Factor = 3
Wiring: NEMA Type B wiring
Output Current Rating: 17A
Circuit Breaker: Thermal Magnetic, 65kA at 480V (G6C Frame) (30A Trip)
Human Interface Module: LCD Door display,digitl keypad - Door Mounted
Control: Transformer with Secondary Fuse, Standard Capacity, Primary Fusing, 120V/60Hz
Control Wiring: #16 AWG MTW(TEW) Cu

**Features Included**
Drive I/P fuses - Class CC (-14DFCC)
Drive Line Reactor (-14RLX)
Unit Grd Stab Tin Plated Cu (-79UT)

**Unit Loc: 06G** **Del Prog: SCII**
**Unit ID: 20**
VFD - PowerFlex 525 AC Drive w/CB

**Rating**
10 HP

**Wiring Diagram**
10002409909

**Name Plate Information**
SEGMENT
PROCESS
AIR FAN
FAN-1260H

**Ethernet Information**

| Device Type | IP Address | Subnet Mask |
|---|---|---|
| 2163W | 192.168.1.12 | 255.255.255.0 |

Cable Length : 4.55 m

PowerFlex 525 Firmware Version : LATEST

**Catalog Number: 2163WB-017JB-14DFCC-14HC2S-14RLX-41TGM-79UT**
Total Space Factor = 3
Wiring: NEMA Type B wiring
Output Current Rating: 17A
Circuit Breaker: Thermal Magnetic, 65kA at 480V (G6C Frame) (30A Trip)
Human Interface Module: LCD Door display,digitl keypad - Door Mounted
Control: Transformer with Secondary Fuse, Standard Capacity, Primary Fusing, 120V/60Hz
Control Wiring: #16 AWG MTW(TEW) Cu

**Features Included**
Drive I/P fuses - Class CC (-14DFCC)
Drive Line Reactor (-14RLX)
Unit Grd Stab Tin Plated Cu (-79UT)

**Unit Loc: 07A** **Del Prog: SCII**
**Unit ID: 16**
VFD - PowerFlex 525 AC Drive w/CB

**Rating**
10 HP

**Wiring Diagram**
10002409909

**Name Plate Information**
SEGMENT
PROCESS
AIR FAN
FAN-1260E

**Ethernet Information**

| Device Type | IP Address | Subnet Mask |
|---|---|---|
| 2163W | 192.168.1.13 | 255.255.255.0 |

Cable Length : 4.07 m

PowerFlex 525 Firmware Version : LATEST

**Catalog Number: 2163WB-017JB-14DFCC-14HC2S-14RLX-41TGM-79UT**
Total Space Factor = 3
Wiring: NEMA Type B wiring
Output Current Rating: 17A
Circuit Breaker: Thermal Magnetic, 65kA at 480V (G6C Frame) (30A Trip)
Human Interface Module: LCD Door display,digitl keypad - Door Mounted
Control: Transformer with Secondary Fuse, Standard Capacity, Primary Fusing, 120V/60Hz
Control Wiring: #16 AWG MTW(TEW) Cu

**Features Included**
Drive I/P fuses - Class CC (-14DFCC)
Drive Line Reactor (-14RLX)
Unit Grd Stab Tin Plated Cu (-79UT)

**Unit Loc: 07G** **Del Prog: SCII**
**Unit ID: 14**
VFD - PowerFlex 525 AC Drive w/CB

**Rating**
10 HP

**Wiring Diagram**
10002409909

**Name Plate Information**
SEGMENT
PROCESS
AIR FAN
FAN-1260D

**Ethernet Information**

| Device Type | IP Address | Subnet Mask |
|---|---|---|
| 2163W | 192.168.1.14 | 255.255.255.0 |

Cable Length : 5.06 m

PowerFlex 525 Firmware Version : LATEST

**Catalog Number: 2163WB-017JB-14DFCC-14HC2S-14RLX-41TGM-79UT**
Total Space Factor = 3
Wiring: NEMA Type B wiring
Output Current Rating: 17A
Circuit Breaker: Thermal Magnetic, 65kA at 480V (G6C Frame) (30A Trip)
Human Interface Module: LCD Door display,digitl keypad - Door Mounted
Control: Transformer with Secondary Fuse, Standard Capacity, Primary Fusing, 120V/60Hz
Control Wiring: #16 AWG MTW(TEW) Cu

**Features Included**
Drive I/P fuses - Class CC (-14DFCC)
Drive Line Reactor (-14RLX)
Unit Grd Stab Tin Plated Cu (-79UT)

**Unit Loc: 08A** **Del Prog: SCII**
**Unit ID: 5**
FVR - Full Voltage Reversing Starter w/CB

**Rating**
3 HP

**Name Plate Information**
CAKE STORE BIN
LEVELING
SCREW
SC-1250

**Overload Relay(s)**
E300 Comm Based Overload (7FE3)
E300 Communication Option = EtherNet/IP
E300 Voltage Code = 120V AC
E300 Control Module = Ground Fault & PTC
E300 Sensing Module = 0.5-30A Current/Ground Fault
E300 Operator Station = Diagnostic Station
E300 Expansion Module = Not Available
Motor RPM = 1800
Motor Full Load Current (FLC) = 4.52
Motor Service Factor = 1.15

**Ethernet Information**

| Device Type | IP Address | Subnet Mask |
|---|---|---|
| 2107 | 192.168.1.16 | 255.255.255.0 |

Cable Length : 1.39 m

E300 Overload Firmware Version : LATEST

**Catalog Number: 2107B-BDB-6P-7FE3EDGN3GD-18A-38TGA-79UT-106-751HS**
Size: NEMA Size 1
Total Space Factor = 1.5
Wiring: NEMA Type B wiring
Circuit Breaker: Instantaneous MCP, 100kA at 480V (G8P Frame) (15A Trip)
Control: Transformer with Secondary Fuse, Standard Capacity, Primary Fusing, 120V/60Hz
Control Wiring: #16 AWG MTW(TEW) Cu

**Features Included**
Std Capacity Control Power Transformer W/Primary Fuses (-6P)
Programmed Control Relay Contact (-18A)
Unit Grd Stab Tin Plated Cu (-79UT)
Omit Power Terminal Blocks (-106)
Heat Shrink Type Markers (-751HS)

**Unit Loc: 08D** **Del Prog: SCII**
**Unit ID: 15**
VFD - PowerFlex 525 AC Drive w/CB

**Rating**
2 HP

**Name Plate Information**
BELT
TRANSFER
GRINDER
GR-1260

**Ethernet Information**

| Device Type | IP Address | Subnet Mask |
|---|---|---|
| 2163W | 192.168.1.17 | 255.255.255.0 |

Cable Length : 2.53 m

PowerFlex 525 Firmware Version : LATEST

**Catalog Number: 2163WB-4P0JB-14DFCC-14HC2S-14RLX-37TGM-79UT**
Total Space Factor = 2
Wiring: NEMA Type B wiring
Output Current Rating: 4A
Circuit Breaker: Thermal Magnetic, 65kA at 480V (G6C Frame) (15A Trip)
Human Interface Module: LCD Door display,digitl keypad - Door Mounted
Control: Transformer with Secondary Fuse, Standard Capacity, Primary Fusing, 120V/60Hz
Control Wiring: #16 AWG MTW(TEW) Cu

**Features Included**
Drive I/P fuses - Class CC (-14DFCC)
Drive Line Reactor (-14RLX)
Unit Grd Stab Tin Plated Cu (-79UT)

**Unit Loc: 08H** **Del Prog: SCII**
**Unit ID: 10**
VFD - PowerFlex 525 AC Drive w/CB

**Rating**
5 HP

**Wiring Diagram**
10004708859

**Name Plate Information**
BELT
DRIVE
NO. 1
BD-1261

**Ethernet Information**

| Device Type | IP Address | Subnet Mask |
|---|---|---|
| 2163W | 192.168.1.18 | 255.255.255.0 |

Cable Length : 3.43 m

PowerFlex 525 Firmware Version : LATEST

**Catalog Number: 2163WB-010JB-14DFCC-14HC2S-14RLX-39TGM-79UT**
Total Space Factor = 2.5
Wiring: NEMA Type B wiring
Output Current Rating: 10A
Circuit Breaker: Thermal Magnetic, 65kA at 480V (G6C Frame) (20A Trip)
Human Interface Module: LCD Door display,digitl keypad - Door Mounted
Control: Transformer with Secondary Fuse, Standard Capacity, Primary Fusing, 120V/60Hz
Control Wiring: #16 AWG MTW(TEW) Cu

**Features Included**
Drive I/P fuses - Class CC (-14DFCC)
Drive Line Reactor (-14RLX)
Unit Grd Stab Tin Plated Cu (-79UT)

| | |
|---|---|
| **Unit Loc: 09A** **Del Prog: SCII**<br>**Unit ID: 25**<br>ENSW - Stratix 5700 20-Port<br><br>**Wiring Diagram**<br>10001898436<br><br>**Ethernet Information**<br>Device Type / IP Address / Subnet Mask<br>2100-ESW / 192.168.1.15 / 255.255.255.0<br><br>Cable Length : 3.15 m<br><br>Ethernet Switch Firmware Version : LATEST | **Catalog Number: 2100-ESW20J-T10LAP**<br>Total Space Factor = 1<br>Lite Stratix 5700 Firmware<br>Power Adapters (w/Unit Mtg) |
| **Unit Loc: 09C** **Del Prog: SCII**<br>**Unit ID: 13**<br>VFD - PowerFlex 525 AC Drive w/CB<br><br>**Rating**<br>2 HP<br><br>**Name Plate Information**<br>DISCHARGE<br>SCREW<br>CONVEYER<br>SC-1260<br><br>**Ethernet Information**<br>Device Type / IP Address / Subnet Mask<br>2163W / 192.168.1.19 / 255.255.255.0<br><br>Cable Length : 2.36 m<br><br>PowerFlex 525 Firmware Version : LATEST | **Catalog Number: 2163WB-4P0JB-14DFCC-14HC2S-14RLX-37TGM-79UT**<br>Total Space Factor = 2<br>Wiring: NEMA Type B wiring<br>Output Current Rating: 4A<br>Circuit Breaker: Thermal Magnetic, 65kA at 480V (G6C Frame) (15A Trip)<br>Human Interface Module: LCD Door display,digitl keypad - Door Mounted<br>Control: Transformer with Secondary Fuse, Standard Capacity, Primary Fusing, 120V/60Hz<br>Control Wiring: #16 AWG MTW(TEW) Cu<br><br>**Features Included**<br>Drive I/P fuses - Class CC (-14DFCC)<br>Drive Line Reactor (-14RLX)<br>Unit Grd Stab Tin Plated Cu (-79UT) |

**Unit Loc: 09G** **Del Prog: SCII**
**Unit ID: 3**
VFD - PowerFlex 525 AC Drive w/CB

**Rating**
10 HP

**Wiring Diagram**
10002409909

**Name Plate Information**
SEGMENT
PROCESS
AIR FAN
FAN-1260L

**Ethernet Information**

| Device Type | IP Address | Subnet Mask |
|---|---|---|
| 2163W | 192.168.1.20 | 255.255.255.0 |

Cable Length : 3.53 m

PowerFlex 525 Firmware Version : LATEST

**Catalog Number: 2163WB-017JB-14DFCC-14HC2S-14RLX-41TGM-79UT**
Total Space Factor = 3
Wiring: NEMA Type B wiring
Output Current Rating: 17A
Circuit Breaker: Thermal Magnetic, 65kA at 480V (G6C Frame) (30A Trip)
Human Interface Module: LCD Door display,digitl keypad - Door Mounted
Control: Transformer with Secondary Fuse, Standard Capacity, Primary Fusing, 120V/60Hz
Control Wiring: #16 AWG MTW(TEW) Cu

**Features Included**
Drive I/P fuses - Class CC (-14DFCC)
Drive Line Reactor (-14RLX)
Unit Grd Stab Tin Plated Cu (-79UT)

**Unit Loc: 10A** **Del Prog: SCII**
**Unit ID: 28**
FVNR - Full Voltage Non-Reversing Starter w/CB

**Rating**
2 HP

**Name Plate Information**
BOILER
NO. 4
RECIRCULATION PUMP
PMP-1274

**Overload Relay(s)**
E300 Comm Based Overload (7FE3)
E300 Communication Option = EtherNet/IP
E300 Voltage Code = 120V AC
E300 Control Module = Ground Fault & PTC
E300 Sensing Module = 0.5-30A Current/Ground Fault
E300 Operator Station = Diagnostic Station
E300 Expansion Module = Not Available
Motor RPM = 1800
Motor Full Load Current (FLC) = 3.11
Motor Service Factor = 1.15

**Ethernet Information**

| Device Type | IP Address | Subnet Mask |
|---|---|---|
| 2113 | 192.168.1.21 | 255.255.255.0 |

Cable Length : 1.8 m

E300 Overload Firmware Version : LATEST

**Catalog Number: 2113B-BDB-6XP-7FE3EDGN3GD-37TGA-79UT-91-90000-106-751HS-790B**
Size: NEMA Size 1
Total Space Factor = 1
Wiring: NEMA Type B wiring
Circuit Breaker: Instantaneous MCP, 65kA at 480V (G8P Frame) (7A Trip)
Control: Transformer with Secondary Fuse, Standard Capacity, Primary Fusing, 120V/60Hz
Control Wiring: #16 AWG MTW(TEW) Cu

**Features Included**
100 Watt Extra Cap. Control Power Transformer W/Pri Fuse (-6XP)
Unit Grd Stab Tin Plated Cu (-79UT)
1 NC on Starter (-91)
4 NO on Starter (-90000)
Omit Power Terminal Blocks (-106)
Heat Shrink Type Markers (-751HS)
2 Aux and 1 Alarm-Internal-CB (-790B)

**Unit Loc: 10C** **Del Prog: SCII**
**Unit ID: 4**
FVNR - Full Voltage Non-Reversing Starter w/CB

**Rating**
5 HP

**Name Plate Information**
BOOSTER
PUMP BELT
CLEANING DEVICE
PMP-1260

**Overload Relay(s)**
E300 Comm Based Overload (7FE3)
E300 Communication Option = EtherNet/IP
E300 Voltage Code = 120V AC
E300 Control Module = Ground Fault & PTC
E300 Sensing Module = 0.5-30A Current/Ground Fault
E300 Operator Station = Diagnostic Station
E300 Expansion Module = Not Available
Motor RPM = 1800
Motor Full Load Current (FLC) = 6.88
Motor Service Factor = 1.15

**Ethernet Information**

| Device Type | IP Address | Subnet Mask |
|---|---|---|
| 2113 | 192.168.1.22 | 255.255.255.0 |

Cable Length : 2.13 m

E300 Overload Firmware Version : LATEST

**Catalog Number: 2113B-BDB-6XP-7FE3EDGN3GD-39TGA-79UT-106-751HS**
Size: NEMA Size 1
Total Space Factor = 1
Wiring: NEMA Type B wiring
Circuit Breaker: Instantaneous MCP, 100kA at 480V (G8P Frame) (15A Trip)
Control: Transformer with Secondary Fuse, Standard Capacity, Primary Fusing, 120V/60Hz
Control Wiring: #16 AWG MTW(TEW) Cu

**Features Included**
100 Watt Extra Cap. Control Power Transformer W/Pri Fuse (-6XP)
Unit Grd Stab Tin Plated Cu (-79UT)
Omit Power Terminal Blocks (-106)
Heat Shrink Type Markers (-751HS)

**Unit Loc: 10E** **Del Prog: SCII**
**Unit ID: 19**
VFD - PowerFlex 525 AC Drive w/CB

**Rating**
1 HP

**Name Plate Information**
BELT
DRIVE
NO. 2
BD-1262

**Ethernet Information**

| Device Type | IP Address | Subnet Mask |
|---|---|---|
| 2163W | 192.168.1.23 | 255.255.255.0 |

Cable Length : 3.2 m

PowerFlex 525 Firmware Version : LATEST

**Catalog Number: 2163WB-2P3JB-14DFCC-14HC2S-14RLX-35TGM-79UT**
Total Space Factor = 2
Wiring: NEMA Type B wiring
Output Current Rating: 2A
Circuit Breaker: Thermal Magnetic, 65kA at 480V (G6C Frame) (15A Trip)
Human Interface Module: LCD Door display,digitl keypad - Door Mounted
Control: Transformer with Secondary Fuse, Standard Capacity, Primary Fusing, 120V/60Hz
Control Wiring: #16 AWG MTW(TEW) Cu

**Features Included**
Drive I/P fuses - Class CC (-14DFCC)
Drive Line Reactor (-14RLX)
Unit Grd Stab Tin Plated Cu (-79UT)

**Unit Loc: 10J** **Del Prog: SCII**
**Unit ID: 17**
VFD - PowerFlex 525 AC Drive w/CB

**Rating**
1.5 HP

**Wiring Diagram**
10002409911

**Name Plate Information**
EXTRUDER
TRACTION
DRIVE
EXT-1260

**Ethernet Information**

| Device Type | IP Address | Subnet Mask |
|---|---|---|
| 2163W | 192.168.1.24 | 255.255.255.0 |

Cable Length : 3.86 m

PowerFlex 525 Firmware Version : LATEST

**Catalog Number: 2163WB-4P0JB-14DFCC-14HC2S-14RLX-36TGM-79UT**
Total Space Factor = 2
Wiring: NEMA Type B wiring
Output Current Rating: 3A
Circuit Breaker: Thermal Magnetic, 65kA at 480V (G6C Frame) (15A Trip)
Human Interface Module: LCD Door display,digitl keypad - Door Mounted
Control: Transformer with Secondary Fuse, Standard Capacity, Primary Fusing, 120V/60Hz
Control Wiring: #16 AWG MTW(TEW) Cu

**Features Included**
Drive I/P fuses - Class CC (-14DFCC)
Drive Line Reactor (-14RLX)
Unit Grd Stab Tin Plated Cu (-79UT)

**Unit Loc: 11A** **Del Prog: SCII**
**Unit ID: 31**
VFD - PowerFlex 525 AC Drive w/CB

**Rating**
0.5 HP

**Name Plate Information**
HEAT EXCHANGER
CLEANING
DRIVE
EA-1277

**Ethernet Information**

| Device Type | IP Address | Subnet Mask |
|---|---|---|
| 2163W | 192.168.1.25 | 255.255.255.0 |

Cable Length : 3.05 m

PowerFlex 525 Firmware Version : LATEST

**Catalog Number: 2163WB-1P4JB-14DFCC-14HC2S-14RLX-33TGM-79UT**
Total Space Factor = 2
Wiring: NEMA Type B wiring
Output Current Rating: 1A
Circuit Breaker: Thermal Magnetic, 65kA at 480V (G6C Frame) (15A Trip)
Human Interface Module: LCD Door display,digitl keypad - Door Mounted
Control: Transformer with Secondary Fuse, Standard Capacity, Primary Fusing, 120V/60Hz
Control Wiring: #16 AWG MTW(TEW) Cu

**Features Included**
Drive I/P fuses - Class CC (-14DFCC)
Drive Line Reactor (-14RLX)
Unit Grd Stab Tin Plated Cu (-79UT)

| | |
|---|---|
| **Unit Loc: 11E** **Del Prog: SCII**<br>**Unit ID: 27**<br>FCB - Feeder Circuit Breaker<br><br>**Rating**<br>15A<br><br>**Wiring Diagram**<br>10004092272<br><br>**Name Plate Information**<br>BOILER<br>UNIT<br>NO. 2<br>B-1272<br><br>**Overload Relay(s)**<br>Motor Full Load Current (FLC) = Not Available | **Catalog Number: 2193F-AJB-30TGM-79UT**<br>Total Space Factor = 1<br>Circuit Breaker: Thermal Magnetic, 65kA at 480V (15) with Frame Rating of 125A (G6C Frame), Plug-In Unit, 15A Trip<br>Lugs Supplied: Std Mech/Lug Pads, 1/0 AWG Size Wire, 1 Cables per Phase<br><br>**Features Included**<br>Unit Grd Stab Tin Plated Cu (-79UT) |
| **Unit Loc: 11G** **Del Prog: SCII**<br>**Unit ID: 8**<br>FCB - Feeder Circuit Breaker<br><br>**Rating**<br>15A<br><br>**Wiring Diagram**<br>10004092272<br><br>**Name Plate Information**<br>BOILER<br>UNIT<br>NO.1<br>B-1271<br><br>**Overload Relay(s)**<br>Motor Full Load Current (FLC) = Not Available | **Catalog Number: 2193F-AJB-30TGM-79UT**<br>Total Space Factor = 1<br>Circuit Breaker: Thermal Magnetic, 65kA at 480V (15) with Frame Rating of 125A (G6C Frame), Plug-In Unit, 15A Trip<br>Lugs Supplied: Std Mech/Lug Pads, 1/0 AWG Size Wire, 1 Cables per Phase<br><br>**Features Included**<br>Unit Grd Stab Tin Plated Cu (-79UT) |

**Unit Loc: 11J** **Del Prog: SCII**
**Unit ID: 18**
FVNR - Full Voltage Non-Reversing Starter w/CB

**Rating**
15 HP

**Name Plate Information**
HEAT EXCHANGER
CLEANING
BOOSTER PUMP
PMP-1261

**Overload Relay(s)**
E300 Comm Based Overload (7FE3)
E300 Communication Option = EtherNet/IP
E300 Voltage Code = 120V AC
E300 Control Module = Ground Fault & PTC
E300 Sensing Module = 6-60A Current/Ground Fault
E300 Operator Station = Diagnostic Station
E300 Expansion Module = Not Available
Motor RPM = 1800
Motor Full Load Current (FLC) = 20.22
Motor Service Factor = 1.15

**Ethernet Information**

| Device Type | IP Address | Subnet Mask |
|---|---|---|
| 2113 | 192.168.1.26 | 255.255.255.0 |

Cable Length : 3.63 m

E300 Overload Firmware Version : LATEST

**Catalog Number: 2113B-CDB-6XP-7FE3EDGN6GD-42TGA-79UT-91-90000-106-751HS-790B**
Size: NEMA Size 2
Total Space Factor = 1
Wiring: NEMA Type B wiring
Circuit Breaker: Instantaneous MCP, 100kA at 480V (G8P Frame) (50A Trip)
Control: Transformer with Secondary Fuse, Standard Capacity, Primary Fusing, 120V/60Hz
Control Wiring: #16 AWG MTW(TEW) Cu

**Features Included**
100 Watt Extra Cap. Control Power Transformer W/Pri Fuse (-6XP)
Unit Grd Stab Tin Plated Cu (-79UT)
1 NC on Starter (-91)
4 NO on Starter (-90000)
Omit Power Terminal Blocks (-106)
Heat Shrink Type Markers (-751HS)
2 Aux and 1 Alarm-Internal-CB (-790B)

**Unit Loc: 11L** **Del Prog: SCII**
**Unit ID: 29**
FVNR - Full Voltage Non-Reversing Starter w/CB

**Rating**
20 HP

**Name Plate Information**
FIRST STAGE
RECIRCULATION
PUMP
PMP-1290

**Overload Relay(s)**
E300 Comm Based Overload (7FE3)
E300 Communication Option = EtherNet/IP
E300 Voltage Code = 120V AC
E300 Control Module = Ground Fault & PTC
E300 Sensing Module = 6-60A Current/Ground Fault
E300 Operator Station = Diagnostic Station
E300 Expansion Module = Not Available
Motor RPM = 1800
Motor Full Load Current (FLC) = 25.79
Motor Service Factor = 1.15

**Ethernet Information**

| Device Type | IP Address | Subnet Mask |
|---|---|---|
| 2113 | 192.168.1.27 | 255.255.255.0 |

Cable Length : 3.96 m

E300 Overload Firmware Version : LATEST

**Catalog Number: 2113B-CDB-6XP-7FE3EDGN6GD-43TGA-79UT-91-90000-106-751HS-790B**
Size: NEMA Size 2
Total Space Factor = 1
Wiring: NEMA Type B wiring
Circuit Breaker: Instantaneous MCP, 100kA at 480V (G8P Frame) (50A Trip)
Control: Transformer with Secondary Fuse, Standard Capacity, Primary Fusing, 120V/60Hz
Control Wiring: #16 AWG MTW(TEW) Cu

**Features Included**
100 Watt Extra Cap. Control Power Transformer W/Pri Fuse (-6XP)
Unit Grd Stab Tin Plated Cu (-79UT)
1 NC on Starter (-91)
4 NO on Starter (-90000)
Omit Power Terminal Blocks (-106)
Heat Shrink Type Markers (-751HS)
2 Aux and 1 Alarm-Internal-CB (-790B)

**Terms and Conditions**

The Proposal is dependent and expressly conditioned upon Purchaser's acceptance of the attached HUBER Technology, Inc. (hereinafter "HUBER") Standard Terms and Conditions of Sale dated 11/12/2021.

**Special Information and Exceptions**

- Price does not include any unloading or any applicable fees or taxes (Local, Federal, or Final Destination)
- Prices are in U.S. Dollars unless noted otherwise
- Freight is delivered with duty paid (D.D.P.) to Job site
- Price does not include installation or building modifications
- The Price Quotation is valid until February 28, 2022 or until withdrawn by HUBER Technology, Inc. (hereinafter "HUBER"). After expiration of validity HUBER reserves the right to adjust pricing to take into account any significant increases in material costs such as steel, stainless steel finished products, stainless steel coil, etc. Due to the **current volatility of raw materials and shipping** HUBER cannot guarantee to hold prices beyond the validity date. HUBER therefore reserves the right to adjust our pricing based on applicable price indexes at time of order.

**Terms of Payment**

- 10 percent of the Procurement Contract Price upon the execution of the Agreement.
- 15 percent of the Procurement Contract Price upon Engineers review of Seller's acceptable Shop Drawings, which review shall not be unreasonably denied.
- 60 percent of the Procurement Contract Price upon delivery of equipment, partial shipment and payments are not permissible. Less such amounts as Engineer may determine in accordance with Paragraph 10.02.A.3 of the General Conditions.
- 5 percent of the Procurement Contract Price upon Engineers review of Seller's acceptable Operation and Maintenance submittals.
- 5 percent of the Procurement Contract Price upon successful substantial completion for startup and functional processing of biosolids.
- 5 percent of the Procurement Contract Price upon successful completion of Performance Test.

**Submittals**

HUBER will provide documentation to the Purchaser per the following schedule:

- Five (5) copies or the quantity stipulated in the equipment specification of submittal shop drawings 15-17 weeks after acceptance of a written purchase order.

- Three (3) copies or the quantity stipulated in the equipment specification of HUBER O&M manuals prior to equipment start-up.

**Shipment**

HUBER will make all reasonable efforts to maintain the following schedule:

- Submittals 15-17 weeks after acceptance of a written purchase order.
- Equipment delivery 30-32 weeks after approved submittals or notice to proceed.
- O&M manuals prior to equipment start-up.
- For any delays in delivery which are beyond HUBER's responsibility, a finance charge of 1.5% of the contract value per month and all direct Costs incurred as a result of the delay will be due and payable to HUBER upon request/invoice.

**Accessories**

This Proposal includes only those items specifically mentioned in the equipment descriptions. Any items which may be necessary for the operation of the equipment, but are not specifically mentioned, such as motors, drives, controls, or supports, are to be supplied via additional quotation separate from this offering.

**Abrasion or Corrosive Materials**

All of HUBER's machines and systems are manufactured from 304 grade stainless steel. The environment or materials the equipment may be exposed to may be abrasive or corrosive. This Proposal makes no representation or warranties concerning the service life of the equipment against such abrasion or corrosion. The concentration of chloride and hydrogen sulfide (H2S) in the equipment operating environment shall be kept below the following values:

- Chloride < 200 mg/l
- Hydrogen sulfide H2S < 6 ppm

Machines made from 316 grade stainless steel are available at an additional price for extremely harsh operating environments upon request.

**Purchase Orders**

All Purchase Orders are to be faxed or mailed to:

HUBER Technology, Inc.
1009 Airlie Parkway
Denver, NC 28037
Phone: (704) 949-1010
Fax: (704) 949-1020

All Purchase Orders are subject to- acceptance by HUBER and acceptance of HUBER's Standard Terms and Conditions.

**Warranty**

LIMITED WARRANTY: HUBER warrants that the equipment and components furnished will be free from defects in workmanship and materials and perform the general process function intended, solely under the conditions defined by HUBER for a period of (a) twenty-four (24) months from completion of installation, start-up or owner acceptance of the equipment assuming the equipment is accepted by the owner within 6 months of delivery or (b) thirty (30) months from the date of delivery to Purchaser, whichever date comes first. HUBER will replace, modify or repair, at its sole option, any such defective component or equipment at no charge provided that HUBER is notified promptly in writing of any claimed defect. If requested by HUBER, any such defective part or component shall be returned to HUBER, freight prepaid. HUBER will provide on-site Field Service when reasonably assured of payment therefore if this warranty does not apply or when such service is required in its judgments. This warranty does not apply to any defect or malfunction arising out of failure to store, install, operate or maintain the equipment in accordance with instructions by HUBER. Warranty shall be voided for any misuse of equipment; operation under conditions other than those defined by HUBER in its operation and maintenance (O&M) manuals for said equipment, or gross operator negligence. Any unauthorized modification or alteration of the equipment or repair or replacement of components may void this warranty, at the sole option of HUBER. For any billable repairs completed outside of the initial warranty period, a sixty (60) day guarantee on work performed and parts supplied will apply.

HUBER MAKES NO OTHER WARRANTY, EXPRESS OR IMPLIED, WITH REGARD TO THE DESIGN, SALE, MERCHANTABILITY OR FITNESS OF THE GOODS FOR A PARTICULAR PURPOSE OR USE EXCEPT AS EXPRESSLY SET FORTH IN HUBER'S TERMS AND CONDITIONS. HUBER IS NOT SUBJECT TO ANY OTHER OBLIGATIONS OR LIABILITIES ARISING OUT OF BREACH OF CONTRACT OR WARRANTY, TORT CLAIMS INCLUDING NEGLIGENCE, GROSS NEGLIGENCE AND STRICT LIABILITY, OR ANY OTHER THEORIES OF LAW. HUBER IS UNDER NO EVENT LIABLE FOR ANY SPECIFIC, INDIRECT, INCIDENTAL OR CONSEQUENTIAL LOSS, DAMAGES, EXPENSE, INJURY, DISMEMBERMENT, OR DEATH OF ANY KIND WHATSOEVER.

**Exclusions**

- Financing
- Cranes and/or lifting devices
- Unloading and/or storage of equipment on job site
- Local, State or Federal taxes or fees
- Foundation design and engineering

(HUBER will only furnish equipment drawings and data)

- Utilities for erection, installation and operation
- Gauges and instrumentation not specifically described in HUBER scope of supply
- Interconnecting wiring, conduit, piping, tubing, valves, fittings, etc. between the equipment and other equipment and/or control devices and control panel.
- Tools, oil, grease, grease gun, dumpster(s), or bin(s).

**Project Management**

HUBER will appoint a Project Manager for the duration of the contract. Project Management services are included in this package and are as follows:

- Provision of a complete critical path project schedule for HUBER equipment
- Coordination with HUBER manufacturing on materials procurement and fabrication to and with HUBER shipping/logistics to ensure HUBER commitments are maintained.

**Erection, Training and Start-up Assistance**

A certified HUBER Service Technician will make every reasonable effort to be at the job site within two (2) weeks after Purchaser's request to HUBER for equipment start-up and commissioning assistance. HUBER will provide additional erection and start-up supervision, which is not specifically included in the scope of our supply at the Purchaser's written request. For such additional services Purchaser shall pay $1,000.00 per day plus expenses, for eight (8) hours per day.

- At the request of the Purchaser, overtime service will be provided at a rate of 1.5 times the regular rate for weekdays, and 2.0 times the regular rate for weekends.
- "Expenses" are defined as the costs of travel from HUBER's location to the point of installation and return; together with accommodation and living expenses during the start-up period of field service. HUBER will make all reasonable efforts to provide a HUBER Rep located within North America. However, some circumstances will require travel from Europe.
- Charges for all time involved will be invoiced, including delays which are beyond HUBER's control. The full net invoice is payable within thirty (30) days of receipt by Purchaser.

**Equipment Standard**

Any deviations from the HUBER standard mechanical and electrical specifications must be discussed with the Purchaser and agreed upon. HUBER reserves the right to charge additional

costs to the equipment price for any non-standard mechanical and electrical components required by the Purchaser and not explicitly stated in HUBER's scope of supply.

**Shop Painting**

Gears and motors will receive three (3) layers of painting, two (2) layers of primer and a finishing layer with synthetic resin varnish.

**HUBER TECHNOLOGY, INC. STANDARD TERMS AND CONDITIONS OF SALE**

## 1. ENTIRE AGREEMENT/ORDERS.

This agreement (the "Agreement") is between HUBER Technology, Inc., its subsidiaries and its affiliates (collectively "HUBER") and Purchaser. No order for HUBER's goods or services shall be binding upon HUBER until acknowledged in writing by HUBER. Such written acknowledgement and these Standard Terms and Conditions of Sale (the "Terms and Conditions") constitute the entire agreement between HUBER and Purchaser. Any purchase order, offer or counter-offer made by Purchaser before or after HUBER's written acknowledgement is rejected and all documents exchanged prior to HUBER's written acknowledgement are merely preliminary negotiations and not part of any agreement between the parties. For example, orders submitted on Purchaser's own purchase order forms modifying, adding to, contrary to, or inconsistent with these Terms and Conditions are expressly rejected and of no force or effect and acceptance is expressly made conditional upon assent to these terms. In no event will HUBER be deemed to have in any way changed, enlarged or modified its liabilities or obligations as fixed by these Terms and Conditions including, without limitation, situations in which HUBER satisfies an order submitted on Purchaser's own purchase order form. No other terms or conditions or modification of these terms shall be binding upon HUBER unless specifically accepted in writing by an Officer of HUBER. Merely signing a purchase order or other document as a condition of payment shall not be deemed a specific acceptance of terms therein by HUBER.

Purchaser shall have been deemed to agree to these Terms and Conditions upon the earlier of acceptance of HUBER's quotation, acceptance of delivery of the goods or services or the issuance of a purchase order to HUBER.

## 2. PRICES.

Until acceptance of a purchase order is acknowledged in writing by HUBER, all prices are subject to change. Written quotations expire fourteen (14) calendar days from the date of quotation unless specified otherwise. Verbal quotations are non-binding on HUBER. Quoted prices do not include sales, excise, municipal, state or any other government taxes. All taxes and other governmental charges upon the production, manufacture, distribution, sale or use of goods or services to the extent required or not forbidden by law to be collected by HUBER from Purchaser, shall be paid by Purchaser to HUBER unless Purchaser furnishes HUBER with exemption certificates acceptable to the relevant taxing authorities. HUBER reserves the right to revise final quoted prices of work in process due to any change in the order on the part of Purchaser or any factor beyond the control of HUBER. Typographical and/or clerical errors made by HUBER are subject to correction.

If Purchaser causes or requests delays in manufacture or shipment beyond six (6) months from acceptance of Purchase Order, HUBER shall have the right to increase price based on any actual escalation in labor, material, overhead, and component costs. HUBER also reserves the right



HUBER Technology, Inc.
1009 Airlie Parkway, Denver, NC 28037
(704) 949-1010 - Fax (704) 949-1020 - huber@hhusa.net
www.huber-technology.com
**A member of the HUBER Group**

to charge Purchaser for any direct costs, reasonable storage costs caused by such delays and a finance charge of 1.5% of the Contract value per month.

**3. TERMS OF PAYMENT.**

Invoices are net thirty (30) days from the date of invoice, unless specified otherwise and approved in writing by HUBER. In the event that the purchase order between Purchaser and HUBER requires partial payments to be made by Purchaser, Purchaser shall pay those required amounts in a timely manner or HUBER will be permitted to suspend, without penalty or liability of any kind, delivery of future goods and services to the Purchaser even though partial payment for such undelivered goods or services may have already been received by HUBER.

Past due accounts will bear interest at the rate of 1.5% per month of the invoiced amount. All invoices are payable in U.S. dollars, unless specified otherwise and approved by HUBER in writing. Acceptance of bank drafts, checks or other form of payment shall be subject to immediate collection of the full face amount thereof. HUBER may, at its discretion, impose a transaction fee on payments processed via wire transfer or by Letter of Credit.

HUBER reserves the right at any time to suspend credit or to change credit terms provided herein when in its sole opinion the financial condition of Purchaser so warrants. In such case, in addition to any other remedies provided herein or by law, HUBER may request cash payment or satisfactory security from Purchaser prior to shipment of goods.
In the event of nonpayment of an invoice when due, and without prejudice to other lawful remedies, HUBER shall have the right, without penalty or liability of any kind, to suspend further work or the delivery of future goods under this Agreement or any other agreement with Purchaser until such invoice is paid in full; provided, however, that if such invoice remains unpaid for more than five (5) days after written demand by HUBER, HUBER may terminate this Agreement without penalty and recover all damages as a result of Purchaser's Breach.

**4. RETAINAGE.**

There shall be no retainage under this Agreement.

**5. TAXES AND OTHER CHARGES.**

The prices for Goods and/or Services do not include any sales, use or other taxes or charges payable to state or local authorities. In addition to HUBER's invoice price or quote price, Purchaser is also responsible for payment of any use-tax, sales tax, excise tax, VAT tax, duty, custom, inspection or testing fee, and/or any other fee, tax, or charge imposed by governmental or non-governmental authority arising from the Goods and/or Services provided by HUBER. Purchaser is responsible for and bears the risk of establishment of a valid exemption from any fee, tax, or charge. In the event HUBER is required to pay any of the fees, taxes, or charges listed in this paragraph, Purchaser herewith agrees to immediately reimburse HUBER for this cost, or in lieu of such payment by HUBER, Purchaser agrees to timely provide an exemption certificate or other comparable document to the entity or authority imposing said



HUBER Technology, Inc.
1009 Airlie Parkway, Denver, NC 28037
(704) 949-1010 - Fax (704) 949-1020 - huber@hhusa.net
www.huber-technology.com
**A member of the HUBER Group**

fee, tax and/or charge. Purchaser further agrees to waive any and all claims regarding the reasonableness of such payment and will be liable to HUBER for reasonable attorneys' fees and/or court costs incurred by HUBER as a result of Purchaser's failure to pay the charges listed in this paragraph.

**6. DELIVERY.**

HUBER shall not be liable for any damage as a result of any non-delivery or delay, including, without limitation, an act of God; act of Purchaser; act of HUBER embargo; other government act, regulation or request; fire; accident; strike; war; boycott; slowdown; riot; or delay in transportation or inability to obtain necessary labor, materials, or manufacturing facilities. HUBER will use its best efforts to meet promised delivery dates, but under no circumstances shall HUBER be liable for any direct, or indirect, consequential, incidental, liquidated or other damages for delay in delivery.

Purchaser will notify HUBER within thirty (30) days after order acceptance of the scheduled delivery date. If Purchaser does not notify, a delivery date of six (6) months, unless otherwise specified by HUBER, after notice to proceed and/or approval of submittals is agreed. For any delays by Purchaser after commencement of manufacturing, a finance charge of 1.5 % per month of the contract value will be assessed to Purchaser.

HUBER reserves the right to substitute suitable alternative materials and components where necessary.

Where the services are to be performed on Purchaser's premises, Purchaser agrees to provide HUBER on a timely basis with such access, machine downtime, utilities and equipment as HUBER shall reasonably require in order to perform the services in accordance with the Agreement. If Purchaser fails to perform its obligations or shall fail to perform them in a timely manner, Purchaser acknowledges and agrees that HUBER shall be entitled to delay performance of the services, without penalty or liability of any kind, until such time as Purchaser has complied in all respects with its obligations and to increase the price for the services to reflect any increased cost to Huber caused by Purchaser's failure to perform or late performance.

If delivery is delayed or deferred by Purchaser beyond the scheduled date, payment shall be due in full when HUBER is prepared to ship the goods or perform the services. The goods may thereafter, at HUBER's option, be stored at the risk and expense of Purchaser.

HUBER may at certain times provide goods or services to Purchaser prior to the issuance, delivery and acceptance of a corresponding purchase order. In such cases, these Terms and Conditions shall apply to such transactions and Purchaser shall be deemed to have accepted such Terms and Conditions upon HUBER's delivery of goods or performance of services.

**7. GOODS ACCEPTANCE.**

It is HUBER's intent to deliver complete orders in good condition to the final destination dictated by the Purchaser. All equipment and components delivered to the receiving location must be duly inspected upon receipt. Any visible damages must be noted on way-bill and followed up with a full inspection within a period of seven (7) days from delivery date. If a written report is not submitted to HUBER within this period it is assumed that the equipment was received in good condition, meets the specifications of the purchase order, constitutes unqualified acceptance by the Purchaser, and Purchaser waives any rights to rejection or remediation of delivered equipment.

**8. FIELD SERVICE.**

"Field Service" refers to the services of a Huber factory-trained representative at the site of end-use for initial installation, inspection, start-up observation and operator training. "Field Service" refers also to any subsequent investigations of warranty issues, operational difficulties, Purchaser complaints, or requests for post-warranty service. Purchaser acknowledges that HUBER Field Service representatives shall make all arrangements necessary with labor unions for their presence on the site. No contractual warranty or indemnity relating to Field Service is extended by HUBER, nor are its Field Service representatives authorized to bind HUBER with any oral representations or statements in conflict with or addition to the governing contract terms or any manual or instructions provided by HUBER. This paragraph shall apply to any and all initial and subsequent Field Service provided by HUBER relating to the Goods sold to the Purchaser. Any field service work performed at site after expiration of the initial warranty period is warranted for sixty (60) days after the work has been completed.

**9. SHIPMENT/RISK OF LOSS.**

HUBER will use commercially reasonable efforts to meet delivery dates stated in advance of actual shipment of goods or performance of services, but in no event shall such quoted delivery dates be deemed to represent fixed or guaranteed delivery dates. Under no circumstances will HUBER be liable for any direct, or indirect, consequential, incidental, liquidated or other damages for delay in delivery. Method and route of shipment will be at the discretion of HUBER unless specified otherwise by Purchaser and agreed by HUBER, and any additional expense of the method or route of shipment specified by Purchaser shall be borne by Purchaser. Claims for shortage or other quantity errors must be made in writing to HUBER within seven (7) days after receipt of shipment. Failure to give such notice shall constitute unqualified acceptance and a waiver of all such claims by Purchaser.

HUBER, in its sole discretion, may accommodate Purchaser requests for delivery of goods in installments if such requests are confirmed in writing by HUBER. Such installment deliveries, when separately invoiced, shall be paid for when due per invoice without regard to subsequent deliveries. Delay in delivery of any installment shall not relieve Purchaser of its obligations to accept remaining deliveries.



HUBER Technology, Inc.
1009 Airlie Parkway, Denver, NC 28037
(704) 949-1010 - Fax (704) 949-1020 - huber@hhusa.net
www.huber-technology.com
**A member of the HUBER Group**

**10. GOVERNMENT STANDARDS.**
HUBER applies quality standards in our manufactured equipment that are designed to meet and comply with federal government occupational safety, noise, sanitation and health standards. The Purchaser is solely responsible for compliance of the equipment and its operation with any state or local laws, codes, ordinances, or regulations, unless otherwise specified by HUBER in its proposal.

**11. LIMITED WARRANTY.**
HUBER warrants that the equipment and components furnished will be free from defects in workmanship and materials and perform the general process function intended, solely under the conditions defined by HUBER for a period of (a) twelve (12) months from completion of installation, start-up or owner acceptance of the equipment assuming the equipment is accepted by the owner within 6 months of delivery or (b) eighteen (18) months from the date of delivery to Purchaser, whichever date comes first. HUBER will replace, modify or repair, at its sole option, any such defective component or equipment at no charge provided that HUBER is notified promptly in writing of any claimed defect. If requested by HUBER, any such defective part or component shall be returned to HUBER, freight prepaid. HUBER will provide on-site Field Service when reasonably assured of payment therefore if this warranty does not apply or when such service is required in its judgments. This warranty does not apply to any defect or malfunction arising out of failure to store, install, operate or maintain the equipment in accordance with instructions by HUBER. Warranty shall be voided for any misuse of equipment; operation under conditions other than those defined by HUBER in its operation and maintenance (O&M) manuals for said equipment, or gross operator negligence. Any unauthorized modification or alteration of the equipment or repair or replacement of components may void this warranty, at the sole option of HUBER. For any billable repairs completed outside of the initial warranty period, a sixty (60) day guarantee on work performed and parts supplied will apply.

HUBER MAKES NO OTHER WARRANTY, EXPRESS OR IMPLIED, WITH REGARD TO THE DESIGN, SALE, MERCHANTABILITY OR FITNESS OF THE GOODS FOR A PARTICULAR PURPOSE OR USE EXCEPT AS EXPRESSLY SET FORTH IN HUBER'S TERMS AND CONDITIONS. HUBER IS NOT SUBJECT TO ANY OTHER OBLIGATIONS OR LIABILITIES ARISING OUT OF BREACH OF CONTRACT OR WARRANTY, TORT CLAIMS INCLUDING NEGLIGENCE, GROSS NEGLIGENCE AND STRICT LIABILITY, OR ANY OTHER THEORIES OF LAW. HUBER IS UNDER NO EVENT LIABLE FOR ANY SPECIFIC, INDIRECT, INCIDENTAL OR CONSEQUENTIAL LOSS, DAMAGES, EXPENSE, INJURY, DISMEMBERMENT, OR DEATH OF ANY KIND WHATSOEVER.

**12. EXCLUSIVE REMEDIES.**
Purchaser acknowledges that its sole and exclusive remedies for breach of the Limited Warranty shall be replacement or repair by HUBER of any defective part or component, and



HUBER Technology, Inc.
1009 Airlie Parkway, Denver, NC 28037
(704) 949-1010 - Fax (704) 949-1020 - huber@hhusa.net
www.huber-technology.com
**A member of the HUBER Group**

payment of the reasonable out of pocket costs incurred in connection with replacement or repair if such costs are approved in advance by HUBER, or refund of 80% of the purchase price if HUBER in its sole discretion concludes the equipment cannot be repaired or replaced. This remedy excludes any other direct, indirect, consequential, incidental, special or other form of damages. It also excludes any extraordinary costs for removal or re-installation of HUBER equipment, such as crane rental, structural alteration, or demolition, necessitated by building design or configuration.

**13. LIMITATION OF LIABILITY/INDEMNITY.**

HUBER's liability on any claim for loss or damage arising out of any transactions under this Agreement or from the performance or breach thereof or connected with any goods or services supplied hereunder, or the sale, resale, operation or use of goods, whether based on agreement, warranty, tort (including negligence) or other grounds, include the Exclusive remedies in ¶ 12 and shall not exceed the price allocable to such goods or services or part thereof involved in the claim, regardless of cause or fault. Purchaser's remedies are limited to the return of non-conforming goods and repayment of the price or to the repair and replacement of non-conforming. This limitation of liability and remedies reflects a deliberate and bargained-for allocation of risks between HUBER and Purchaser and constitutes the basis of the parties' bargain, without which HUBER would not have agreed to the price or terms of this transaction.

HUBER SHALL NOT IN ANY EVENT BE LIABLE WHETHER AS A RESULT OF BREACH OF AGREEMENT, WARRANTY, TORT (INCLUDING NEGLIGENCE) OR OTHER GROUNDS FOR INCIDENTAL, SPECIAL OR CONSEQUENTIAL DAMAGES INCLUDING, BUT NOT LIMITED TO, LOSS OF PROFITS OR REVENUE, LOSS OF USE OF GOODS OR ASSOCIATED PRODUCTS, BUSINESS INTERRUPTION, COST OF CAPITAL, COST OF SUBSTITUTE GOODS, FACILITIES OR SERVICES, DOWNTIME COSTS, OR CLAIMS OF PURCHASERS OF PURCHASER FOR SUCH DAMAGE. In addition, if HUBER furnishes Purchaser with advice or other assistance regarding any goods or services supplied hereunder, or any system or equipment in which any such goods may be installed, and which is not required pursuant to this transaction, the furnishing of the advice or assistance will not subject HUBER to any liability, whether based on agreement, warranty, tort (including negligence) or other grounds.

In the event Purchaser modifies HUBER goods or incorporates HUBER goods into another product or component part, Purchaser agrees to hold harmless and indemnify Huber from any and all claims, liabilities, losses, costs and expenses (including reasonable attorneys' fees) involving personal injury or property damage. Purchaser also agrees to hold harmless and indemnify HUBER from any patent or other intellectual property claims related to (i) any HUBER goods made in accordance with Purchaser's designs or specifications; or (ii) the use of any drawings provided to HUBER by Purchaser for use in the manufacture, production or assembly of such goods.



HUBER Technology, Inc.
1009 Airlie Parkway, Denver, NC 28037
(704) 949-1010 - Fax (704) 949-1020 - huber@hhusa.net
www.huber-technology.com
**A member of the HUBER Group**

**14. TITLE.**
Notwithstanding delivery, installation or start-up, title to all equipment furnished shall remain solely with HUBER until the full purchase price is paid by Purchaser. Until such time, HUBER may enter the premises where such equipment is then located and repossess and remove such equipment by any lawful means as this is the property of HUBER Technology. Purchaser agrees to do all acts deemed necessary or desirable or requested by HUBER to maintain HUBER's rights in, and title to such equipment.

**15. WAIVER**.
The failure of Huber to insist in any one or more instances, upon the performance of any of the Terms and Conditions as set forth herein or the failure of HUBER to exercise any of its rights hereunder shall not be construed as a waiver or relinquishment of any such terms, conditions or rights and shall not effect HUBER's right to insist on strict performance and compliance with regard to any future performance of these Terms and Conditions.

**16. CHOICE OF LAW.**
This Contract shall be exclusively governed by the laws of the State of North Carolina, without regard to its conflict of law provisions. HUBER and Purchaser further consent to the exclusive personal jurisdiction of any applicable court, in the county of Lincoln, North Carolina for any legal action or proceeding brought to enforce, construe or interpret these Terms and Conditions. Venue is proper only in the North Carolina Superior Court of Lincoln County. Each party hereto irrevocably submits to the jurisdiction of each court in each such action or proceeding.

**17. DISPUTE RESOLUTION/ATTORNEYS' FEES.**
Any controversy or claim arising out of or relating to this Contract or its breach shall be settled by arbitration conducted in Denver, North Carolina in accordance with the Construction Industry Arbitration Rules of the American Arbitration Association and North Carolina law and judgment on the award rendered by the arbitrator(s) may be entered in any court of competent jurisdiction. The arbitrator shall award attorneys' fees, costs, witness costs, expert witness fees, arbitrator compensation, arbitrator fees, exhibit fees, travel costs and other amounts deemed reasonable to the prevailing party as defined by North Carolina General Statute §44A et al.

**18. ASSIGNMENT, WAIVER, ENTIRE AGREEMENT, SEVERABILITY.**
Neither party shall assign or delegate any of its rights or obligations under this Agreement without the prior written consent of the other party, which such consent shall not be unreasonably withheld, except that either party may assign or delegate its rights or obligations hereunder to an Affiliate without the other party's consent. As used herein, the term "Affiliate" shall mean any entity that directly or indirectly through one or more intermediaries, controls or is controlled by, or is under common control with the entity specified. Huber may terminate this Agreement upon written notice to Purchaser without any further liability to Purchaser if



HUBER Technology, Inc.
1009 Airlie Parkway, Denver, NC 28037
(704) 949-1010 - Fax (704) 949-1020 - huber@hhusa.net
www.huber-technology.com
**A member of the HUBER Group**

there is a change of control of Purchaser. The Agreement constitutes the entire agreement between the parties with respect to its subject matter, and supersedes all prior oral or written representations or agreements by the parties with respect to the subject matter of this Agreement. Neither the Agreement nor any of its provisions may be modified, amended or waived, whether orally, through the parties' course of performance, course of dealing or course of conduct, or manifested in any other way, unless in writing and signed by an authorized officer of Huber. It is the express intention of the parties that such requirement for written modifications, amendments or waivers be strictly enforced notwithstanding judicial precedent or statutory provisions to the contrary. Any provision found invalid or unenforceable will not affect the validity or enforceability of any other provision and the invalid provision may be judicially modified to the extent enforceable.

Purchaser_____ HUBER _____

# SECTION 40 20 55
DOUBLE CONTAINMENT PIPING SYSTEM

## PART 1 - GENERAL

### 1.1 SUMMARY

A. Section Includes:
   1. Prefabricated double containment piping systems.

B. Related Specification Sections include but are not necessarily limited to:
   1. Section 40 05 00 - Pipe and Pipe Fittings - Basic Requirements.

### 1.2 QUALITY ASSURANCE

A. Referenced Standards:
   1. ASTM International (ASTM):
      a. A53, Standard Specification for Pipe, Steel, Black, and Hot-Dipped, Zinc-Coated, Welded and Seamless.
      b. A234, Standard Specification for Pipe Fittings of Wrought Carbon Steel and Alloy Steel for Moderate and High Temperature Service.
      c. D1784, Standard Specification for Rigid Poly(Vinyl Chloride) (PVC) Compounds and Chlorinated Poly(Vinyl Chloride) (CPVC) Compounds.
      d. D1785, Standard Specification for Poly (Vinyl Chloride) (PVC) Plastic Pipe, Schedules 40, 80, and 120.
      e. D2467, Standard Specification for Poly (Vinyl Chloride) (PVC) Plastic Pipe Fittings, Schedule 80.
      f. D2564, Standard Specification for Solvent Cements for Poly (Vinyl Chloride) (PVC) Plastic Piping Systems.
      g. D2837, Standard Test Method for Obtaining Hydrostatic Design Basis for Thermoplastic Pipe Materials or Pressure Design Basis for Thermoplastic Pipe Products.
      h. D2855, Standard Practice for Making Solvent-Cemented Joints with Poly (Vinyl Chloride) (PVC) Pipe and Fittings.
      i. D3261, Standard Specification for Butt Heat Fusion Polyethylene (PE) Plastic Fittings for Polyethylene (PE) Plastic Pipe and Tubing.
      j. D3350, Standard Specification for Polyethylene Plastics Pipe and Fittings Material.
      k. F439, Standard Specification for Chlorinated Poly(Vinyl Chloride) (CPVC) Plastic Pipe Fittings, Schedule 80.
      l. F441, Standard Specification for Chlorinated Poly(Vinyl Chloride) (CPVC) Plastic Pipe, Schedules 40 and 80.
      m. F2620, Standard Practice for Heat Fusion Joining of Polyethylene Pipe and Fittings.

B. Qualifications:
   1. Installer shall be certified by piping system manufacturer.

### 1.3 DEFINITIONS

A. CPVC: Chlorinated Polyvinyl Chloride.

B. PVC: Polyvinyl Chloride.

C. HDPE: High Density Polyethylene.

D. PTFE: Polytetrafluoroethylene

### 1.4 SYSTEM DESCRIPTION

A. Each contained piping system shall consist of primary piping system supported within a secondary containment housing.

1. Each system shall be provided with suitable drains and vents and be designed to provide for expansion and contraction and complete drainage of both the primary and secondary containment piping.
2. Interstitial supporting devices shall be made from polypropylene supports and shall be provided within the secondary containment pipe, and designed to allow continuous drainage in the annular space to the drain points.
3. Interstitial supports shall be integrally bonded to the primary piping.

### 1.5 SUBMITTALS

A. Shop Drawings:
   1. See Specification Section 40 05 00.
      a. Include details of pipe fabrications (including supporting devices, method of attachment and spacing), pre-fabricated double-containment fitting dimensions, starting and terminating connections, high point vent and low point drain details for the secondary containment, valves and accessories.
      b. Submit joint details, methods and location of supports and all other pertinent technical data for all piping to be furnished.
   2. Installer certification.
   3. Field quality control documents.

## PART 2 - PRODUCTS

### 2.1 MANUFACTURERS

A. Subject to compliance with the Contract Documents, the following manufacturers are acceptable:
   1. Georg Fischer.
   2. ISCO Industries.
   3. Rovanco, Permapipe.
   4. Tricon.
   5. ASAHI/America.

### 2.2 MATERIALS

A. HYPO (System 7):
   1. Primary piping: See 40 05 00 System 7
   2. Secondary piping:
      a. Piping:
         1) CPVC, Type IV, Grade 1, ASTM D1784.
         2) Schedule 80, ASTM F441.
      b. Fittings:
         1) CPVC, ASTM D1784.
         2) Schedule 80, ASTM F439.
      c. Supports: Polypropylene.
   3. Joints: Solvent welded, ASTM D2564 and ASTM D2855.

B. SH (System 8):
   1. Primary piping: See 40 05 00 System 8
   2. Secondary piping:
      a. Piping:
         1) CPVC, Type IV, Grade 1, ASTM D1784.
         2) Schedule 80, ASTM F441.
      b. Fittings:
         1) CPVC, ASTM D1784.
         2) Schedule 80, ASTM F439.
      c. Supports: Polypropylene.
   3. Joints: Solvent welded, ASTM D2564 and ASTM D2855.

C. SA (System 24):
   1. Primary piping: See 40 05 00 System 24
   2. Secondary piping:
      a. Piping:
         1) PTFE tubing ASTM D3295.
      b. Fittings:
         1) PTFE, compression type tube fittings.
      c. Supports: Polypropylene.
   3. Joints: Compression type couplings, unions at equipment and valves.

### 2.3 FABRICATION

A. Hydrostatically design in accordance with ASTM D2837.

B. Pre-assemble and pre-test all fittings.

## PART 3 - EXECUTION

### 3.1 INSTALLATION

A. Install products in accordance with manufacturer's instructions.

B. The manufacturer shall furnish the services of a competent representative to instruct the Contractor's personnel prior to or during the start of installation.

C. Solvent-cement CPVC and PVC piping joints using heavy body-slow set cement.

D. The splitting and rewelding of contaminant pipe fittings shall not be permitted.

### 3.2 FIELD QUALITY CONTROL

A. Following installation of the systems, flush clean the primary piping system.
   1. Check the operation of all valves and appurtenances.

B. Pressure test the primary piping system at 150% of the system design pressure for a period of 1 HR.

C. Pneumatically test the secondary containment piping system at a minimum duration of 2-1/2 HRS.
   1. Soap the external joints and visually inspected for leaks.
   2. Ensure that overpressurization beyond 10 PSI cannot occur.
   3. Take precautions to protect against the hazards of a possible brittle fracture under compressed gas.
   4. Tests shall be done in strict accordance with the recommendations of the manufacturer.

**END OF SECTION**

# SECTION 46 21 10
SEPTAGE RECEIVING STATION

## PART 1 - GENERAL

### 1.1 SUMMARY

A. Furnish and install one (1) septage receiving station complete with rock trap, management software, inlet valve, flow meter, and spare parts as specified herein and shown on the Drawings.

B. Furnish and install all necessary valves, interconnecting piping and wiring, instrumentation, anchor bolts and other necessary appurtenances for a complete and operating installation.

C. Related Sections include but are not necessarily limited to:
1. Division 00 - Procurement and Contracting Requirements.
2. Division 01 - General Requirements.
3. Section 40 05 52 – Miscellaneous Valves.
4. Section 40 41 13 – Heat Tracing Cable.
5. Section 40 42 00 – Pipe, Duct, and Equipment Insulation

### 1.2 QUALITY ASSURANCE

A. Manufacturer Qualifications:
1. Minimum of twenty (20) years' experience producing similar and shall be able to submit documentation of at least fifteen (15) independent installations using the same size or larger equipment as detailed in the below.

B. Referenced Standards:
1. American Gear Manufacturers Association (AGMA)
2. American Institute of Steel Construction (AISC)
3. American Society of Testing and Materials (ASTM)
4. American Welding Society (AWS)
5. National Electrical Manufacturers Association (NEMA)

### 1.3 SUBMITTALS

A. See Section 01 33 00 for requirements for the mechanics and administration of the submittal process.

B. Shop Drawings:
1. Plans and elevations showing location and dimension of components.
2. Details of connections, design elements, and relation to adjacent items.

C. Product Data:
1. Acknowledgement that products submitted meet requirements of standards referenced.
2. Manufacturer's installation instructions.
3. Fabrication and/or layout drawings.
4. Certifications.
5. Test reports.
6. Anchor bolt calculations stamped by registered Professional Engineer in the State of North Carolina.
7. Management software.

D. Contract Closeout Information:
1. Operation and Maintenance Data:
   a. See Section 01 33 04for requirements for the mechanics, administration, and the content of Operation and Maintenance Manual submittals.

### 1.4 WARRANTY

A. The septage receiving station system shall be guaranteed against defects in material and workmanship under normal use and service for a period of one year after its final acceptance, during which time repairs or replacements shall be made without charge.

## PART 2 - PRODUCTS

### 2.1 MANUFACTURERS

A. Subject to compliance with the Contract Documents, the following manufacturers are acceptable:
   1. Septage Receiving Station (SAP-1400):
      a. Lakeside Equipment Corporation.
      b. Huber.
      c. Enviro-Care/SAVECO.
   2. Automatic Sampler (SMPL-1400):
      a. Teledyne ISCO.

### 2.2 PERFORMANACE REQUIREMENTS

A. Tank:
   1. Number of septage acceptance plants: One.
   2. Solids capacity: 3%.
   3. Flow rate capacity: 300 gpm.
   4. Inlet: 4” flanged Class 150 ANSI/ASME B16.5 rated flanges.
   5. Outlet: 8” flanged Class 150 ANSI/ASME B16.5 rated flanges.

B. Wash water:
   1. Maximum flow rate: 52 gpm.
   2. Maximum pressure: 75 psi.

C. Screen Drive:
   1. Maximum horsepower: 2.
   2. Maximum speed: 1,680 rpm.
   3. Classification: Class 1, Division 2.

D. Rock Trap:
   1. Minimum volume: 3 cubic feet.
   2. Inlet: 4” flanged Class 150 ANSI/ASME B16.5 rated flanges.
   3. Outlet: 4” flanged Class 150 ANSI/ASME B16.5 rated flanges.

E. Automatic Sampler:
   1. Explosion proof.
   2. Classification:
      a. Class 1, Division 2.

### 2.3 MATERIALS

A. The septage receiving tank and components shall be manufactured from AISI 304L stainless steel expect as noted.
   1. Stainless steel components shall undergo pickling to ensure maximum resistance to corrosion.

B. Bearings for the rake cleaning comb shall be made of bronze or AISI 304L stainless steel.

### 2.4 COMPONENTS

A. Screen
   1. Provide a cylindrical fine screen shall be designed and built to withstand all static and hydraulic forces exerted by the liquid to the screen.

2. Provide a screen basket with a cylindrical shape, which shall be open at the front and top.
    a. The basket ring support bars shall have adequately machined slots so that the rake teeth can penetrate the basket ring bars to ensure proper cleaning of the full basket depth.
3. Provide a seal plate to close the gap between the circular screen and the rectangular concrete channel. The seal plate shall be of sufficient height to prevent bypassing of flow around the screen at the maximum upstream water level.

B. Rotating Rake
1. Provide a rotating rake assembly with teeth penetrating the depth of the screen bars to ensure positive solids removal.
2. The rake shall reverse at least once during the cleaning cycle to pass through the topmost (home) position where it shall be cleaned by a stainless steel cleaning comb that is attached by means of a hinge to the top of the screen basket.
3. The rotating rake and the screw conveyor shall be fixed to the same shaft and driven by a common drive.
4. A stainless steel backed set of nylon brushes shall be attached to the rake arm and positioned such that they sweep the rim of the screenings hopper to remove material caught on the rim.

C. Screenings Conveyor
1. Provide a screenings screw conveyor tube with a minimum of two (2) anti-rotation bars each with a minimum thickness of ¼", welded to the inside of the transport tube along its longitudinal axis.
2. A flange shall be welded to the lower end of the screenings transport tube to attach the screen basket and to provide for attachment of the screenings collection hopper. A drive support flange shall be welded to the upper end of the screenings transport tube for attachment of the drive assembly.
3. A shafted stainless steel screw shall be installed in the tube for conveying and compaction of the screened material. A replaceable flight section with an angle of about 120 degrees that is bolted to the shaft shall be provided at the bottom of the shaft where the wear is highest.
4. The upper and lower ends of the screw conveyor shaft shall be fitted with shrink fitted solid stubs and welded and ensured perfect alignment to prevent metal fatigue.
5. The lower stub shall be supported by a bearing that is lubricated for life. The bearing shall include a bronze slide bushing that is provided with a low friction UHMW polyethylene sealcoating and a pair of lip-seals. The entire lower bearing assembly shall be held in place using stainless steel bolted plates. The lower bearing shall not take any thrust from the screw.
6. The compaction zone shall be designed to form a plug of screenings material and to return water released from the screened material back to the channel perforations that are machined into the screenings transport tube.
    a. The compaction zone shall be provided with non-metallic reinforced housing, furnished with gaskets and bolts, and easily removable for 360-degree access.
    b. The housing shall be provided with a drain connection at its lowest point via heavy-duty stainless steel band flexible PVC hose for drain water.
    c. Water that is released from the screenings shall be returned via a reinforced rubber hose attached to the dewatering section. Drain design shall allow for removal and cleaning of the drain hose should it ever become plugged without removing the drive, discharge head, or screw conveyor.

D. Wash System
1. Three (3) wash systems, described below, shall be provided via a manifold to evenly distribute wash water to all washing points on the screen utilizing a minimum of three (3) electrically operated solenoid valves.
    a. Lower wash system:
        1) Located near the upper end of the screenings basket just prior to where screenings enter the screw conveyor transport tube.

b. Screenings wash system:
   1) Located in the upper section of the transport tube no more than 17 inches from the beginning of the compaction zone to break up and return organic materials to the flow stream and to ensure maximum screenings washing.
   2) The screenings wash system and screenings screw conveyor shall be designed to prevent washing screenings down the center of the screw conveyor.
c. Dewatering chamber flush water system:
   1) Periodically clean the compaction and dewatering zone via a stainless steel wash nozzle located in the compaction/dewatering chamber.
d. See Specification 40 05 52 – Miscellaneous Valves for solenoid valves requirements.

2. A plant water strainer shall be provided for the incoming plant water supply.
3. The wash systems shall be operated on an intermittent basis only.
4. The solenoid valves shall be operated by the programmable logical controller. Manual operation of the solenoid valves shall also be possible from the local control station.

E. Screen Drive
1. The rake mechanism and screw shall be driven by a shaft mounted gearbox and motor assembly
2. The motor shall be provided with thermostats to provide thermal overload protection in addition to current overload protection.
3. A proximity sensor for locating the rake position shall be mounted to the outer drive housing with a fabricated stainless steel bracket.
4. The speed reducer shall be driven by a field-replaceable NEMA C-flanged, 1,800 rev/min, ball bearing, continuous-duty, totally-enclosed, fan-cooled motor with leads to a large conduit box for outdoor operation.

F. Tank
1. The unit shall be supplied with a stainless steel tank wherein the cylindrical bar screen is integrated. The tank shall be provided with adequate stiffening to prevent distortion and with four height adjustable (+/- ¾ inch) legs that shall be anchored on the floor. Lifting lugs shall be provided for unloading the unit.
2. The tank shall be provided with a hinged and gasketed cover.
   a. Cover shall be of an inset design to prevent leakage even in case of gasket failure. Opening and closing of the cover shall be supported by a pair of pressurized pneumatic cylinders made of stainless steel.
   b. The cover shall be provided with a keyed turn-lock. Tank and cover shall be spray water tight.

## 2.5 ACCESSORIES

A. Rock Trap
1. Provide rock trap as shown on Drawings
2. The rock trap housing shall be constructed of stainless steel with 10 gauge minimum sides and bottom. Support legs shall be provided for anchoring to a base slab and lifting lugs and shall be furnished for unloading the tank. Support legs shall be adjustable +3/4 inches in vertical height for allowing leveling of the unit.
3. Cover shall be held in place via stainless steel nuts and bolts.
4. A 2” opening in the base of the trap shall be provided to allow emptying of accumulated debris.

B. Flow Meter
1. A magnetic flow meter shall be installed in the inlet piping system between the electrically actuated pinch valve and the septage receiving tank

C. Inlet Valve
1. The Septage Receiving Station inlet flow shall be controlled by an electrically actuated or hydraulically actuated pinch valve and shall be installed in the inlet piping.
2. If an electric actuator is sued the actuator shall be suitable for 460VAC, 3-phase operation in an explosion proof environment and have a maximum opening/closing time of 8 seconds.

D. Anchor Bolts
   1. Equipment manufacturer shall furnish all anchor bolts of ample size and strength required to securely anchor each item of equipment. Anchor bolts, hex nuts, and washers shall be stainless steel. Anchor bolts shall be wedge or epoxy type.

E. Sample Port
   1. Provide a sample port on top of or above the high-water level of the septage receiving tank that will accommodate an autosampler tube.

F. Autosampler
   1. Provide one autosampler
      a. ISCO Model 5800 or approved equal.
      b. Capable of taking 24 individual 1 liter samples in poly bottles, one for each septage load
      c. Automatically take sample from the septage receiving station tank during septage load-out.
      d. Controls
         1) Record date and time of each sample
            a) Store up to 10,000 entries
         2) Output run and fail status
         3) Management Software shall interface with the autosampler to receive periodic sample data.

G. Outdoor Freeze Protection
   1. The septage receiving station shall be furnished with electrical heat tracing, and thermal insulation to protect against freezing.
      a. Use design criteria in Section 40 41 13 – Heat Tracing Cable.
   2. Areas to be heat traced, at a minimum:
      a. Screenings transport tube
      b. All piping, including spray wash piping.
      c. Compaction and dewatering zone
      d. All valves/solenoids.
   3. Heating and insulation system requirements:
      a. Insulation shall be mineral wool.
      b. Include self-regulating heat tracing.
      c. Adjustable thermostat/controller.
         1) Controller to be powered through LCP-1400 and shall not exceed 1000W.
         2) Meet requirements of Section 40 41 13 – Heat Tracing Cable.
      d. Stainless steel protective covers/jacketing over all insulation.
         1) Where the wash water supply and electrical wiring conduit penetrate the stainless steel cover, bulkhead adapters shall be provided.
   4. All components requiring service or maintenance shall be easily accessible.

   1. Local operator stations shall be provided for both the Septage Receiving Station (Series 14) and the Solids Receiving Station (Series 11) Control panel shall be suitable for outdoors. Enclosure shall be NEMA 4X Stainless Steel with front cover, full window, lockable door latch, and shall include the following:
      a. Programmable logic controller (Allen Bradley)
      b. Operator interface (Allen Bradley)
      c. E-stop pushbutton
   2. Main control panel (LCP-1400) shall be suitable for outdoors. Enclosure shall be NEMA 4X Stainless Steel with continuous hinge and lockable door latch, and shall, at a minimum, include the following:
      a. Hand-Off-Auto selector switches for the following
         1) Screen drive
         2) Common screen wash

3) Tank Wash
b. Screen forward-off-reverse
1) Screen drive
c. Spray wash pushbuttons (push-to-test)
1) Regular/heavy cleaning cycle
d. Pilot Lights
1) Screen running
2) Screen failure
3) Screen upstream high level
e. E-stop pushbutton (red)
3. Major Instrumentation:
a. Flow meter to provide analog output to Septage Receiving Station LCP-1400 and Septage Hauler Access Station LCS-1400.
b. Provide ultrasonic level transmitter on SAP-1400 to monitor screen upstream high level.

B. Management Software
1. The Vendor is to provide two Management Software panels containing the same necessary software to allow a local or remote networked PC to seamlessly interface with the hauler station/s using an Ethernet connection.
a. One panel is to be located at the Septage Receiving Station (Series 14) and one panel at the Solids Receiving Station (Series 11)
b. The software shall allow the facility to connect and exchange data to two hauler stations, located at two receiving sites.
2. Contractor is to provide a site owned PC in the Controls Room (Series 12) for Vendor Management System installation. The PC system requirements:
a. Operating System: Latest Windows at time of Bid.
b. CPU: Intel Core i5, 2 GHz, minimum
c. RAM: 4 GB, minimum
d. Storage: 15 GB, minimum
e. Network: 1 Gbps / 100 Mbps Ethernet connection
3. The software shall be web based with unlimited users, utilizing Microsoft Internet Information Services (IIS). Recommended web browsers: Google Chrome, Mozilla Firefox.
4. The software shall be used to configure the station's access device and enable/disable hauler access codes.
5. The software shall be used to configure the devices that will measure the flow rate and volume.
6. The software shall monitor each station and automatically upload the hauler's transaction data.
7. The data from each hauler transaction shall be collected and stored in a secure SQL database. The software shall generate a SQL report with the following data collected:
a. Site ID
b. Station ID
c. Ticket Number
d. Hauler ID
e. Date and Time of Transaction
f. Volume Unloaded
g. Additional Process Analyzer Data
h. Product Type ID
i. Alarm ID
j. Five (5) additional fields will be available for the administrator to define
8. Status and Alarm Features:
a. The software shall allow the facility to monitor the Hauler Access Station in real-time. The facility shall be able to monitor the current customers/trucks total flow, waste types, valve status, equipment faults, and additional user-defined variables.

C. Integration to SCADA

1. Refer to PI&D sheet 97Y601.

### 2.7 MAINTENANCE MATERIALS

A. The following spare parts shall be provided:
   1. One (1) set of rake heads, combs, and brush with stainless steel mounting hardware.
   2. One (1) complete solenoid valve assembly.
   3. One (1) solenoid valve re-build kit.
   4. One (1) lower bearing element with stainless steel wear sleeve and seals.
   5. Three (3) spare fuse sets of each size and type.

## PART 3 - EXECUTION

### 3.1 INSTALLATION

A. Install the septage receiving station and all accessories in accordance with the drawings, approved shop drawings, and the manufacturer's installation instructions.

B. Align, adjust, and lubricate in accordance with the manufacturer's instructions and leave in proper working condition.

### 3.2 FIELD QUALITY CONTROL

A. Employ and pay for services of equipment manufacturer's field service representative(s) to:
   1. Inspect equipment covered by this Specification Section.
   2. Supervise adjustments and installation checks.
   3. Conduct start-up of equipment and perform operational checks.
   4. Provide Owner with a written statement that manufacturer's equipment has been installed properly, started up, and is ready for operation by Owner's personnel.
   5. Instruct Owner's personnel at jobsite on operation and maintenance.
   6. Refer to Section 01 75 00 for minimum hour requires for field service and training.

## END OF SECTION

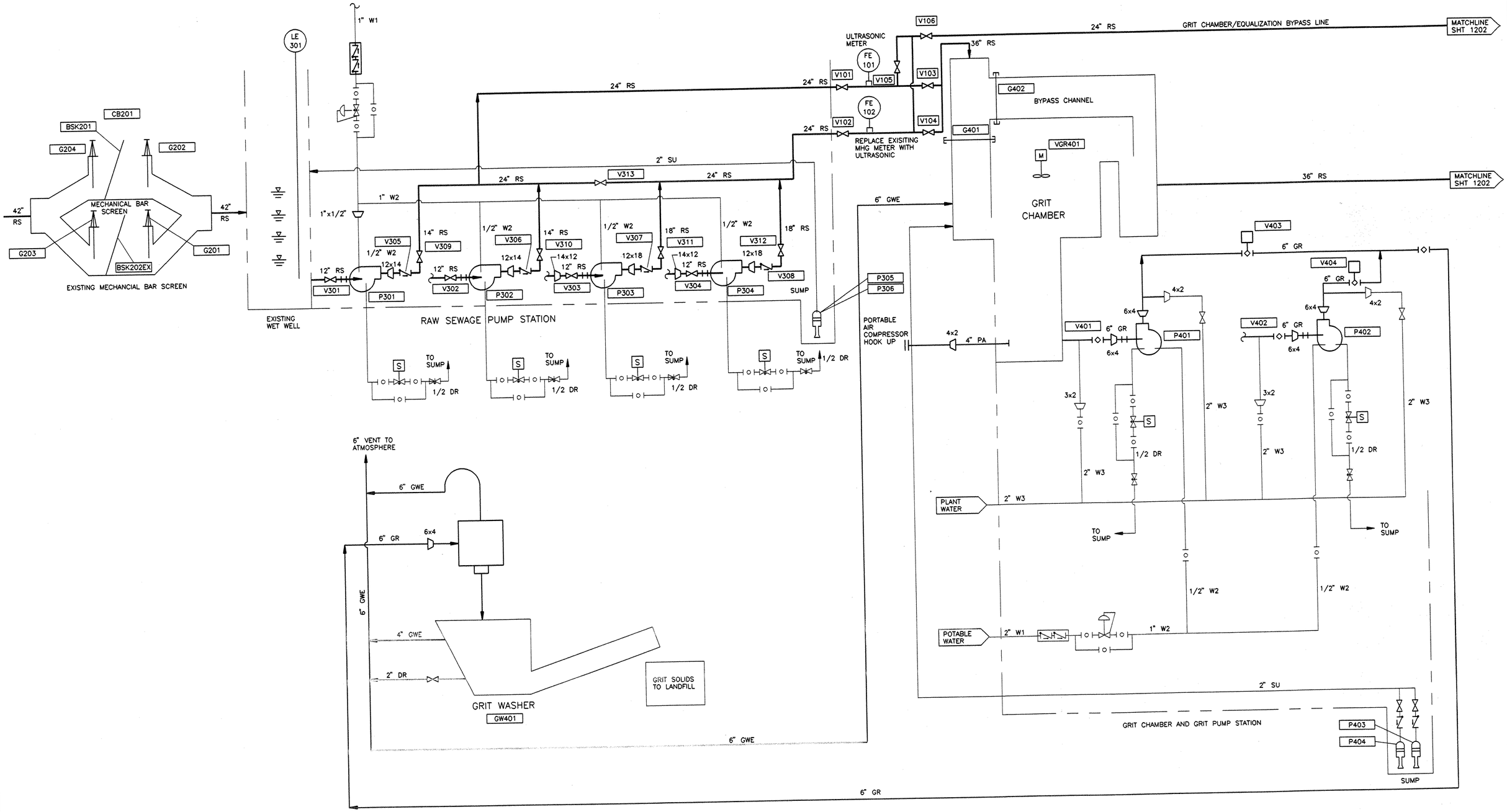


HDR

HDR Engineering, Inc. of North Carolina

| Issue No. | Description | Date | Drwn. | Chkd. | Resp. Engr. | Proj. Mgr. |
|---|---|---|---|---|---|---|
| R | RECORD DRAWING | 6/97 | | | | |
| 0 | ISSUED FOR CONSTRUCTION | 5/19/94 | | | | |
| B | ISSUED FOR BIDS | 1/10/94 | | | | |
| A | ISSUED FOR APPROVAL | 6/15/93 | | | | |

NORTH CAROLINA PROFESSIONAL SEAL 8205 REGISTERED ENGINEER RICHARD D. HAMILTON

| | |
|---|---|
| Project Manager | R. HAMILTON |
| Architect | G. GENRICH |
| Civil | K. MOSTELLER |
| Electrical | R. MILLS |
| I&C/Process | R. HAMILTON |
| Mechanical | D. DeBOER |
| Structural | N. CABLE |
| Drawn By | S. HANCOCK |

# City of Hickory
## Henry Fork WWTP
## Expansion and Upgrade
## Contract A - General Construction

Hickory North Carolina

## Process and Instrumentation Diagram - I

| Date | Project No. | Sheet No. | Issue |
|---|---|---|---|
| NOV 1993 | 00231-012-018 | 1201 | R |

Scale: NO SCALE

P:\HICKORY2\HF-1201

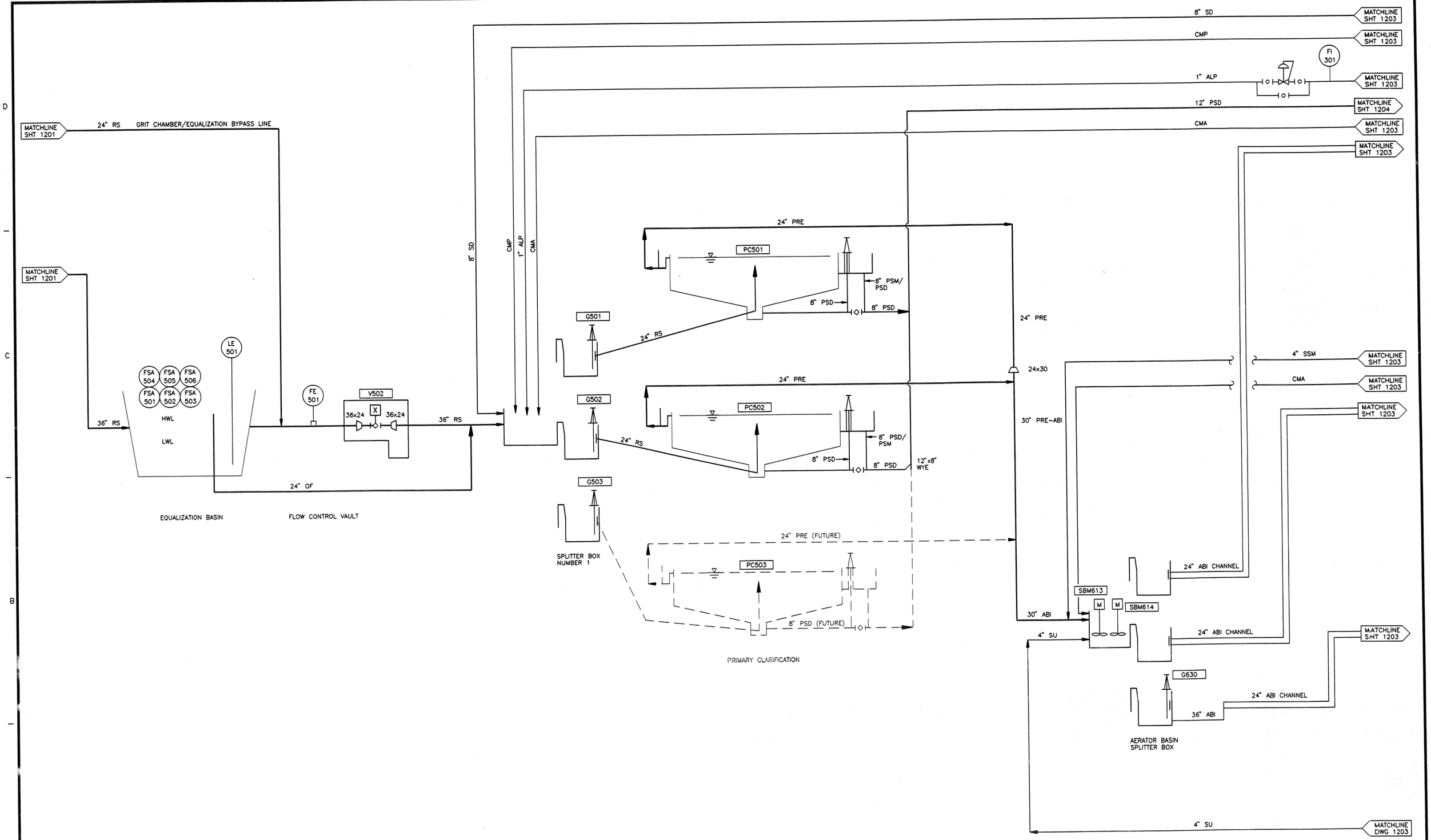


HDR

HDR Engineering, Inc. of North Carolina

| Issue No. | Description | Date | Drwn. | Chkd. | Resp. Engr. | Proj. Mgr. |
|---|---|---|---|---|---|---|
| R | RECORD DRAWING | 6/97 | | | | |
| 0 | ISSUED FOR CONSTRUCTION | 5/19/94 | | | | |
| B | ISSUED FOR BIDS | 1/10/94 | | | | |
| A | ISSUED FOR APPROVAL | 6/15/93 | | | | |

NORTH CAROLINA PROFESSIONAL SEAL 8209 ENGINEER RICHARD D. HAMILTON

| | |
|---|---|
| Project Manager | R. HAMILTON |
| Architect | G. GENRICH |
| I&C/Process | R. HAMILTON |
| Civil | K. MOSTELLER |
| Mechanical | D. DeBOER |
| Electrical | R. MILLS |
| Structural | N. CABLE |
| Drawn By | S. HANCOCK |

# City of Hickory
## Henry Fork WWTP
## Expansion and Upgrade
## Contract A - General Construction

Hickory North Carolina

# Process and Instrumentation Diagram - II

| Date | Project No. | Sheet No. | Issue |
|---|---|---|---|
| NOV 1993 | 00231-012-018 | 1202 | R |
| Scale: NO SCALE | | | |

P:\HICKORY2\HF-1202

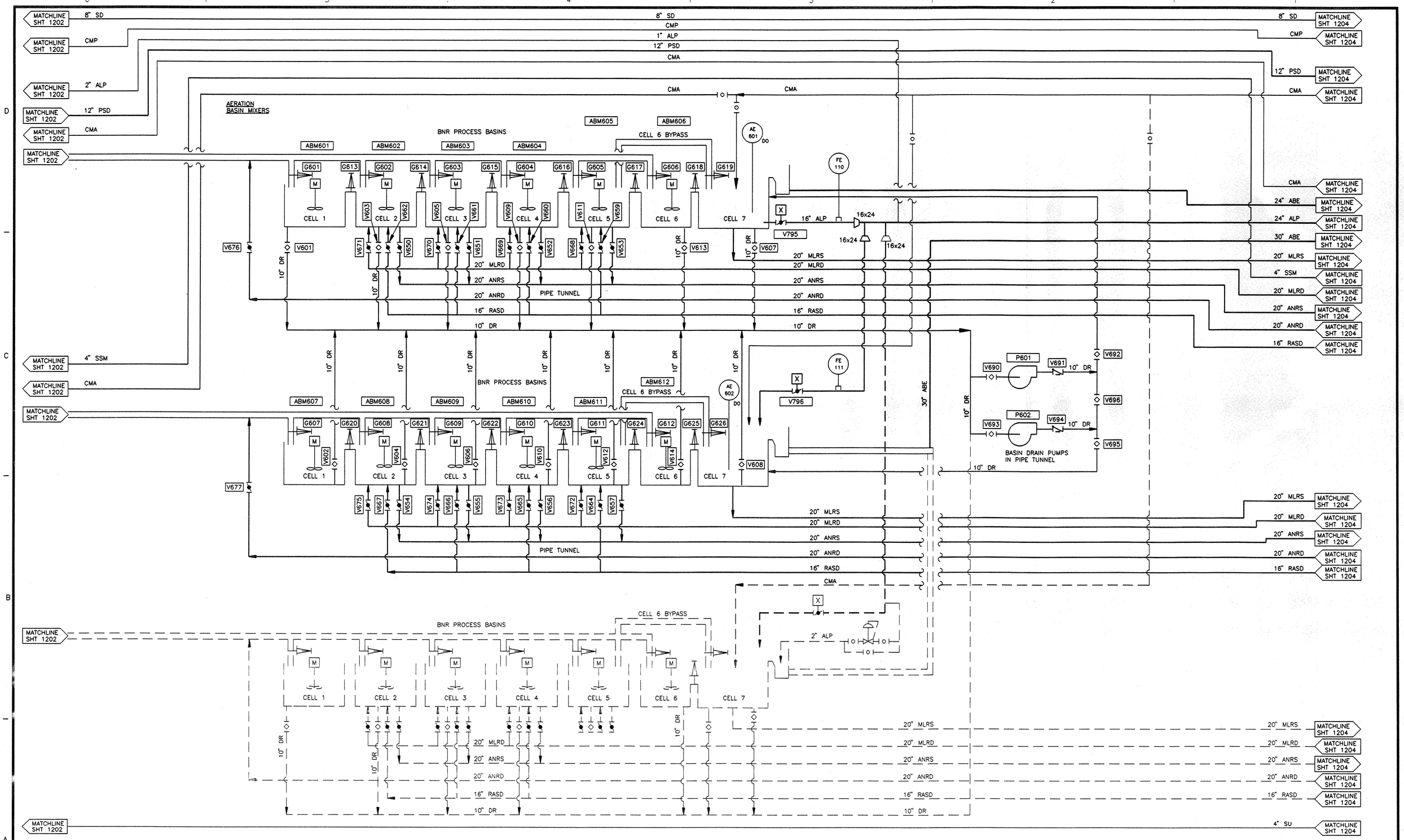


HDR

HDR Engineering, Inc. of North Carolina

| Issue No. | Description | Date | Drwn. | Chkd. | Resp. Engr. | Proj. Mgr. |
|---|---|---|---|---|---|---|
| R | RECORD DRAWING | 6/97 | | | | |
| O | ISSUED FOR CONSTRUCTION | 5/19/94 | | | | |
| B | ISSUED FOR BIDS | 1/10/94 | | | | |
| A | ISSUED FOR APPROVAL | 6/15/93 | | | | |

NORTH CAROLINA PROFESSIONAL SEAL 8205 ENGINEER

| | |
|---|---|
| Project Manager | R. HAMILTON |
| Architect | G. GENRICH |
| Civil | K. MOSTELLER |
| Electrical | R. MILLS |
| I&C/Process | R. HAMILTON |
| Mechanical | D. DeBOER |
| Structural | N. CABLE |
| Drawn By | S. HANCOCK |

# City of Hickory
## Henry Fork WWTP
## Expansion and Upgrade
## Contract A - General Construction

Hickory North Carolina

# Process and Instrumentation Diagram - III

| Date | Project No. | Sheet No. | Issue |
|---|---|---|---|
| NOV 1993 | 00231-012-018 | 1203 | R |

Scale: NO SCALE

P:\HICKORY2\HF-1203

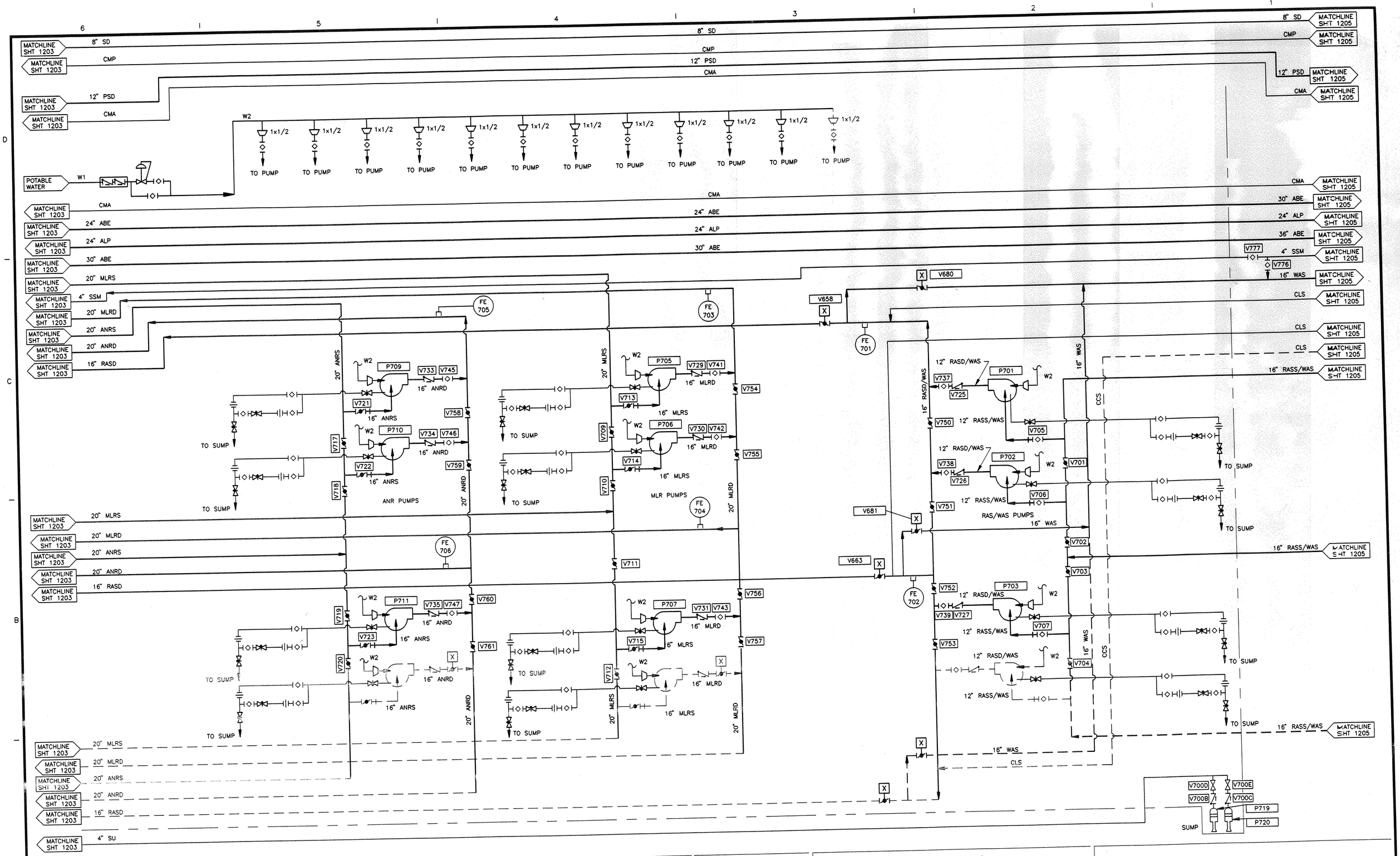


HDR

HDR Engineering, Inc. of North Carolina

| Issue No. | Description | Date | Drwn. | Chkd. | Resp. Engr. | Proj. Mgr. |
|---|---|---|---|---|---|---|
| R | RECORD DRAWING | 6/97 | | | | |
| 0 | ISSUED FOR CONSTRUCTION | 5/19/94 | | | | |
| B | ISSUED FOR BIDS | 1/10/94 | | | | |
| A | ISSUED FOR APPROVAL | 6/15/93 | | | | |

NORTH CAROLINA PROFESSIONAL SEAL 8205 RAYMOND D. HAMILTON

| | |
|---|---|
| Project Manager: R. HAMILTON | |
| Architect: G. GENRICH | I&C/Process: R. HAMILTON |
| Civil: K. MOSTELLER | Mechanical: D. DeBOER |
| Electrical: R. MILLS | Structural: N. CABLE |
| | Drawn By: S. HANCOCK |

# City of Hickory
## Henry Fork WWTP
## Expansion and Upgrade
## Contract A - General Construction

Hickory North Carolina

# Process and Instrumentation Diagram - IV

| Date | Project No. | Sheet No. | Issue |
|---|---|---|---|
| NOV 1993 | 00231-012-018 | 1204 | R |
| Scale: NO SCALE | | | |

\HICKORY2\HF-1204

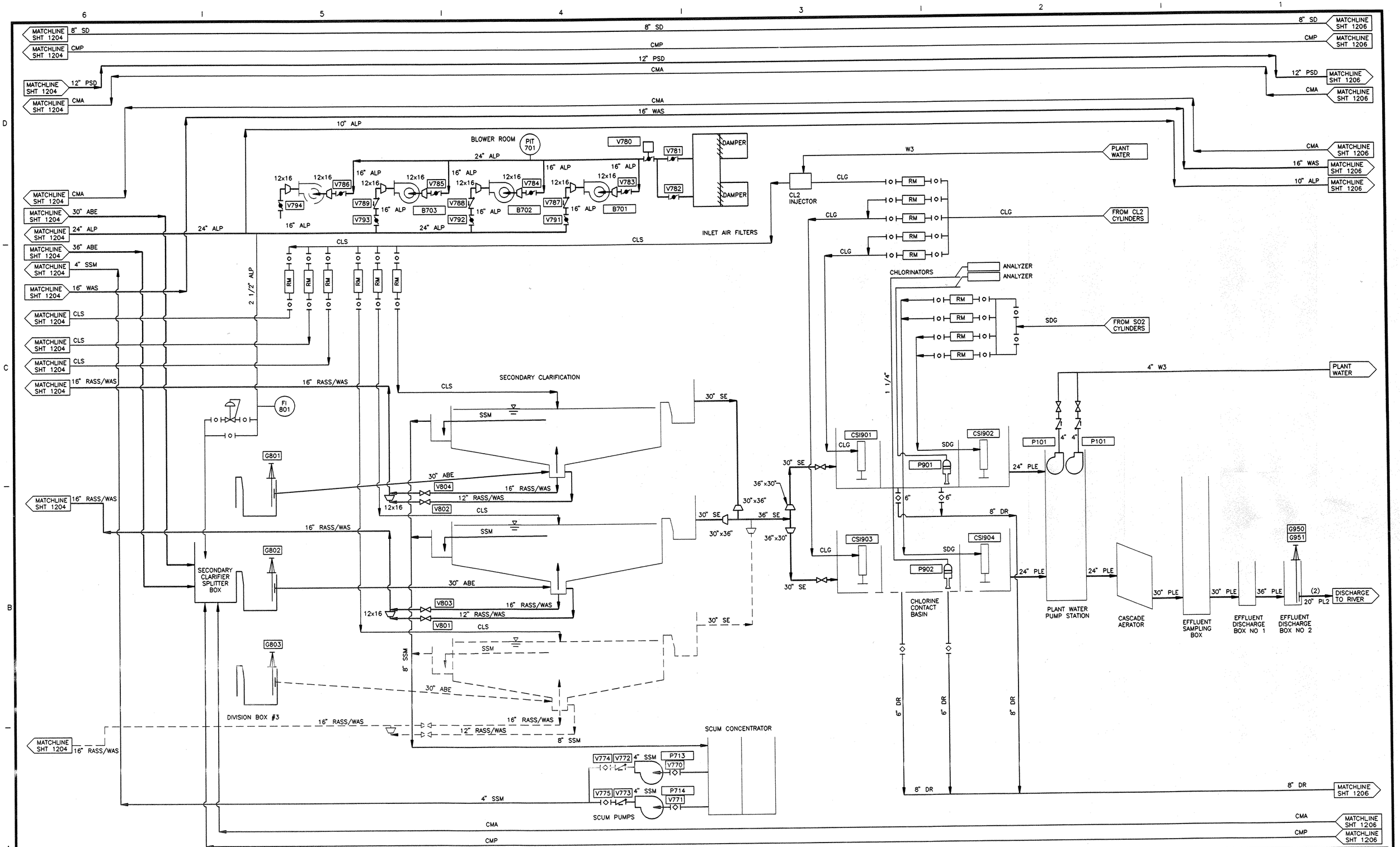


HDR

HDR Engineering, Inc. of North Carolina

| Issue No. | Description | Date | Drwn. | Chkd. | Resp. Engr. | Proj. Mgr. |
|---|---|---|---|---|---|---|
| R | RECORD DRAWING | 6/97 | | | | |
| 0 | ISSUED FOR CONSTRUCTION | 5/19/94 | | | | |
| B | ISSUED FOR BIDS | 1/10/94 | | | | |
| A | ISSUED FOR APPROVAL | 6/15/93 | | | | |

NORTH CAROLINA PROFESSIONAL SEAL 8205 ENGINEER RAYMOND D. HAMILTON

| | |
|---|---|
| Project Manager: R. HAMILTON | |
| Architect: G. GENRICH | I&C/Process: R. HAMILTON |
| Civil: K. MOSTELLER | Mechanical: D. DeBOER |
| Electrical: R. MILLS | Structural: N. CABLE |
| | Drawn By: S. HANCOCK |

# City of Hickory
## Henry Fork WWTP
## Expansion and Upgrade
## Contract A - General Construction

Hickory North Carolina

## Process and Instrumentation Diagram - V

| Date | Project No. | Sheet No. | Issue |
|---|---|---|---|
| NOV 1993 | 00231-012-018 | 1205 | R |
| Scale: NO SCALE | | | |

P:\HICKORY2\HF-1205

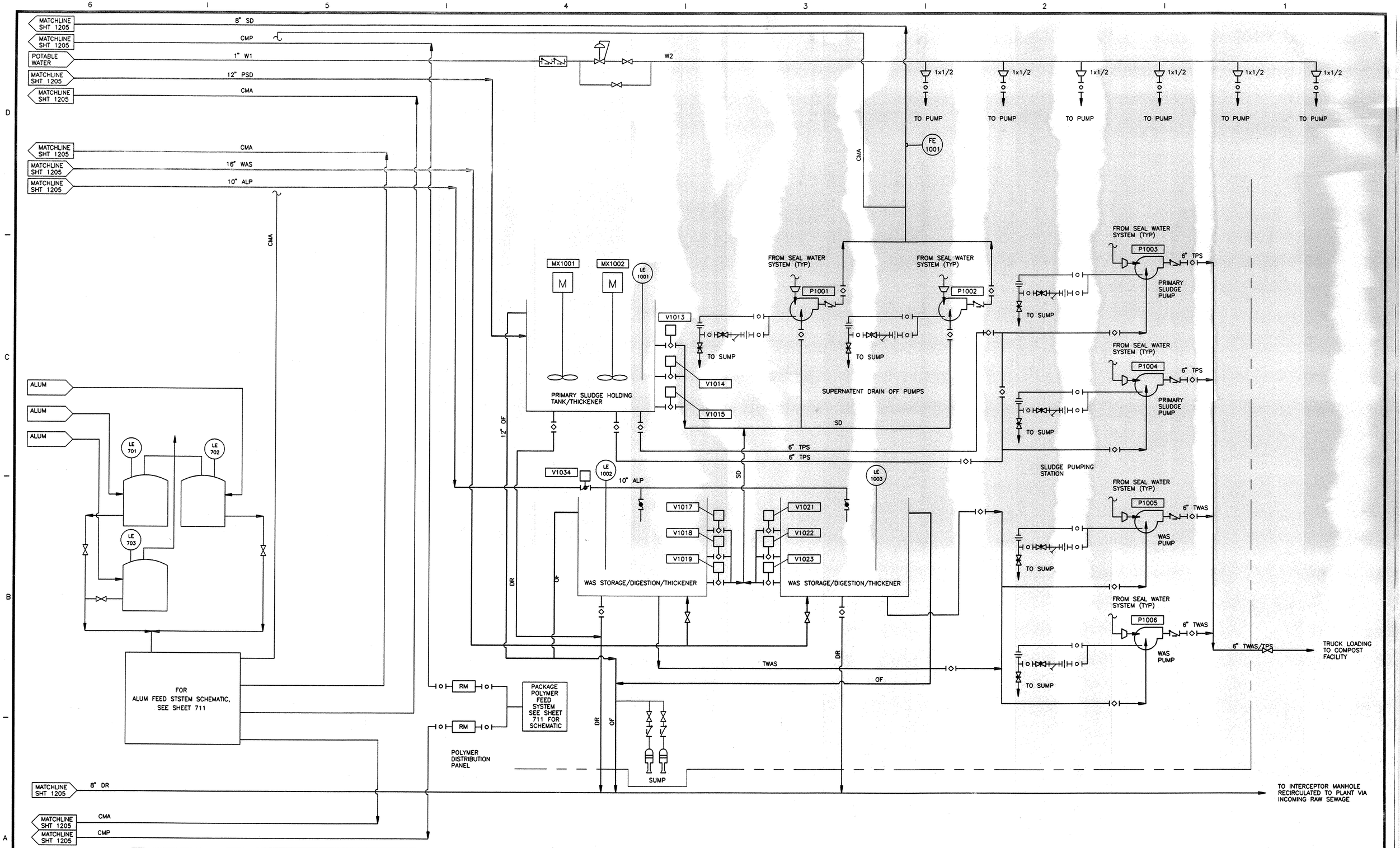


HDR

HDR Engineering, Inc. of North Carolina

| Issue No. | Description | Date | Drwn. | Chkd. | Resp. Engr. | Proj. Mgr. |
|---|---|---|---|---|---|---|
| R | RECORD DRAWING | 6/97 | | | | |
| 0 | ISSUED FOR CONSTRUCTION | 5/19/94 | | | | |
| B | ISSUED FOR BIDS | 1/10/94 | | | | |
| A | ISSUED FOR APPROVAL | 6/15/93 | | | | |

NORTH CAROLINA PROFESSIONAL SEAL 8207 ENGINEER RAYMOND R. HAMILTON

| | |
|---|---|
| Project Manager | R. HAMILTON |
| Architect | G. GENRICH |
| Civil | K. MOSTELLER |
| Electrical | R. MILLS |
| I&C/Process | R. HAMILTON |
| Mechanical | D. DeBOER |
| Structural | N. CABLE |
| Drawn By | S. HANCOCK |

# City of Hickory
## Henry Fork WWTP
## Expansion and Upgrade
## Contract A - General Construction

Hickory North Carolina

## Process and Instrumentation Diagram - VI

| Date | Project No. | Sheet No. | Issue |
|---|---|---|---|
| NOV 1993 | 00231-012-018 | 1206 | R |
| Scale: NO SCALE | | | |

P:\HICKORY2\HF-1205

DESCRIPTION OF WORK IN EXISTING CONTROL BUILDING

1. REMOVE EXISTING MAIN CONTROL PANEL
   (a) REMOVE ALL WIRE IN EXISTING CONDUITS ENTERING BOTTOM OF CONTROL PANEL. WIRE AND CABLE FROM MANHOLE OUTSIDE TO BE PULLED BACK INTO MANHOLE. EACH CONDUCTOR END INSULATED, AND THEN COILED AND SECURED FOR FUTURE USE. REMOVE TELEPHONE CABLES BACK TO THE EXISTING TELEPHONE TERMINAL IN OFFICE. REMOVE 120V POWER CIRCUIT BACK TO PANEL
   (b) CUT OFF CONDUITS BELOW FLOOR LEVEL AND PATCH FLOOR TO MATCH SURROUNDING FLOOR.
2. THE FOLLOWING INSTRUMENTATION EQUIPMENT SHALL REMAIN IN OPERATION DURING CONSTRUCTION
   (a) EFFLUENT FLOW RECORDER AND TOTALIZER
   (b) INFLUENT PUMP STATION, SWEETWATER PUMP STATION, AND CHARLES CREEK PUMP STATION TELEMETRY EQUIPMENT AND ALARMS
3. PROVIDE AN ALARM PANEL WITH THE ABOVE ITEMS MOUNTED IN THE PANEL. EXTEND EXISTING SIGNAL WIRE FROM THE MANHOLE OUTSIDE AND FROM THE TELEPHONE TERMINAL TO THE ALARM PANEL. LOCATE ALARM PANEL IN THE CONTROL BUILDING WHERE DIRECTED BY THE OWNER.
4. EXTEND DATA HIGHWAY CABLES (PLC NETWORK CABLES) IN RIGID GALVANIZED STEEL CONDUIT TO AN 18"x18"x6" NEMA 12 ENCLOSURE MOUNTED IN THE OFFICE CLOSET. TERMINATE CABLES AS REQUIRED IN THIS BOX FOR PLC NETWORK OPERATION.

GENERAL NOTES

A. REMOVE ELECTRICAL EQUIPMENT ON RACKS AT THE EXISTING EQUALIZATION BASIN AND AT THE EXISTING GRIT UNIT. REMOVE WIRE BACK TO PANEL OR MOTOR CONTROL CENTER. (C AD-3)

SPECIFIC NOTES:

1. SEE "DESCRIPTION OF WORK IN EXISTING CONTROL BUILDING" THIS SHEET.
2. PROVIDE TYPE 'N' LIGHT FIXTURE AND SWITCH IN VAULT.
3. ALL UNDERGROUND CONDUITS ARE NOT SHOWN ON THE ELECTRICAL SITE. SEE OTHER DRAWINGS FOR ADDITIONAL UNDERGROUND CONDUITS REQUIRED.
4. INSTALL SWITCHGEAR ON CONCRETE PAD AS SHOWN IN EQUIPMENT DETAIL, SHEET NO 1420. PROVIDE 3-#4/0 15 KV AND 1-#2 GND PRIMARY SERVICE CABLE UNDERGROUND IN CONDUIT TO DUKE POWER CO SERVICE POLE. EXTEND CONDUIT AND CABLE ON SERVICE POLE UP TO 36" BELOW CUTOUTS PROVIDED BY DUKE POWER CO. PROVIDE CABLE TERMINATORS ON EACH END OF CABLES AND CONNECT INSIDE SWITCHGEAR. POWER CO WILL MAKE CONNECTIONS TO CUTOUTS. COORDINATE ALL WORK WITH POWER CO. (C AD-1)
5. MOUNT INDICATED EQUIPMENT ON EQUIPMENT SUPPORT FRAME. SEE DETAIL ON SHEET NO. 1421.
6. REMOVE WIRE FROM EXIST TRANSFORMER TO MAIN C/B AND FROM MAIN C/B TO EXISTING TRANSFER SWITCH.
7. REMOVE WIRE FROM EXISTING TRANSFER SWITCH TO EXISTING MAIN SWITCHBOARD AND GENSET. REFEED EXISTING MAIN SWITCHBOARD FROM DSB2 IN PUMP STATION ELECTRICAL BUILDING.

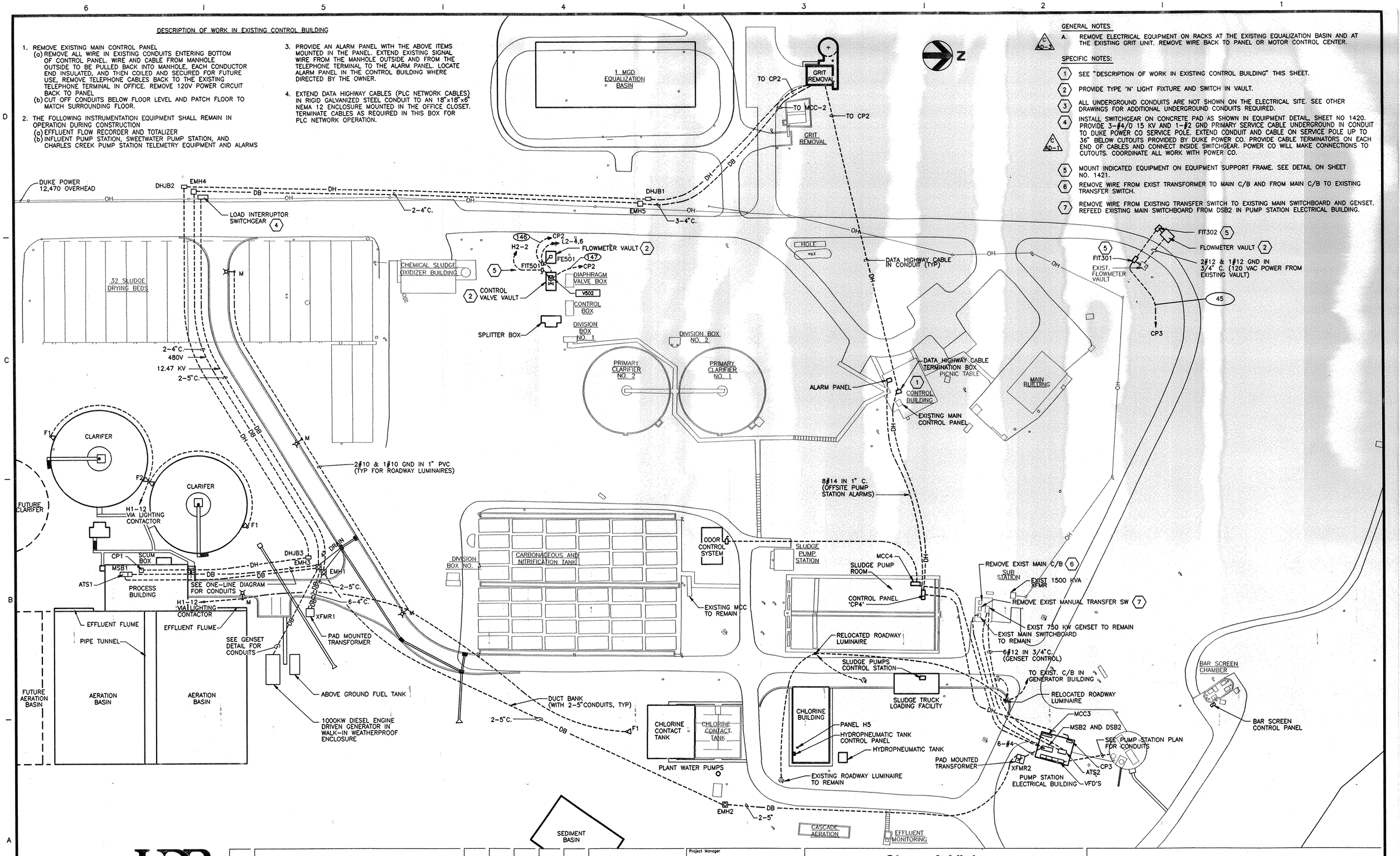


HDR

HDR Engineering, Inc. of North Carolina

| Issue No. | Description | Date | Drwn. | Chkd. | Resp. Engr. | Proj. Mgr. |
|---|---|---|---|---|---|---|
| R | RECORD DRAWING | 6/97 | | | | |
| O | ISSUE FOR CONSTRUCTION | 5/19/94 | | | | |
| C | CONFORM TO ADDENDA NO 1 AND NO 3 | 2/17/94 | | | | |
| B | ISSUED FOR BIDS | 1/10/94 | | | | |
| A | ISSUED FOR APPROVAL | 6/15/93 | | | | |

NORTH CAROLINA PROFESSIONAL SEAL 8205 RAYMOND D. HAMILTON 1-18-94

| | |
|---|---|
| Project Manager: R. HAMILTON | |
| Architect: G. GENRICH | M&C/Process: R. HAMILTON |
| Civil: K. MOSTELLER | Mechanical: D. DeBOER |
| Electrical: R. MILLS | Structural: N. CABLE |
| | Drawn By: S. HANCOCK |

# City of Hickory
## Henry Fork WWTP Expansion and Upgrade
## Contract C - Electrical

Hickory North Carolina

# Electrical Site Plan

| Date | Project No. | Sheet No. | Issue |
|---|---|---|---|
| NOV 1993 | 00231-012-018 | 1401 | R |

Scale: 1" = 40'

FILENAME: P:\WORKFOR\JF-1401

GENERAL NOTES

A. THE GENERAL CONTRACTOR WILL LEAVE THE EXISTING MOTOR STARTERS IN RAW SEWAGE PUMP STATION IN PLACE UNTIL NEW PUMPS ARE OPERATIONAL. THE ELECTRICAL CONTRACTOR SHALL PROVIDE TEMPORARY WIRING FROM THE EXISTING STARTERS TO NEW PUMP MOTORS TO CONTINUE STATION IN OPERATION UNTIL THE GENERAL CONTRACTOR IS READY TO INSTALL THE NEW STAIRWELL. AT THIS TIME THE ELECTRICAL CONTRACTORS SHALL PROVIDE NEW WIRING TO THE PUMPS AS SHOWN ON THIS DRAWING. AFTER THE STATION IS OPERATING ON THE NEW SERVICE, REMOVE THE EXISTING SERVICE WIRE AND CONDUIT BACK TO THE EXISTING SWITCHBOARD IN THE GENERATOR BUILDING.

SPECIFIC NOTES

1. REMOVE WIRE AND CONDUIT TO EXISTING MANLIFT.
2. REMOVE EXISTING MOTOR CONTROL CENTER IN PUMP STATION AND ALL ASSOCIATED CONDUIT AND WIRE.
3. EXTEND COPPER BUBBLER LINE BELOW GRADE TO PUMP STATION AND CONNECT TO EXISTING WET WELL DIP TUBE.
4. PROVIDE THREE TYPE 'B1' FIXTURES MOUNTED TO ILLUMINATE THE STAIRWELL. NO PHOTOCELL CONTROLLERS ARE REQUIRED. EXTEND WIRE AND CONDUIT TO EXISTING PANEL EP4 AND CONNECT TO NEW CIRCUIT BREAKER IN EP4.
5. PROVIDE 4 #14 AND 1 #14 IN 3/4"C TO MCC3. CONNECT FAN CONTROLS TO OPERATE AS EXISTING.
6. SEE CONTROL PANEL SCHEDULE.

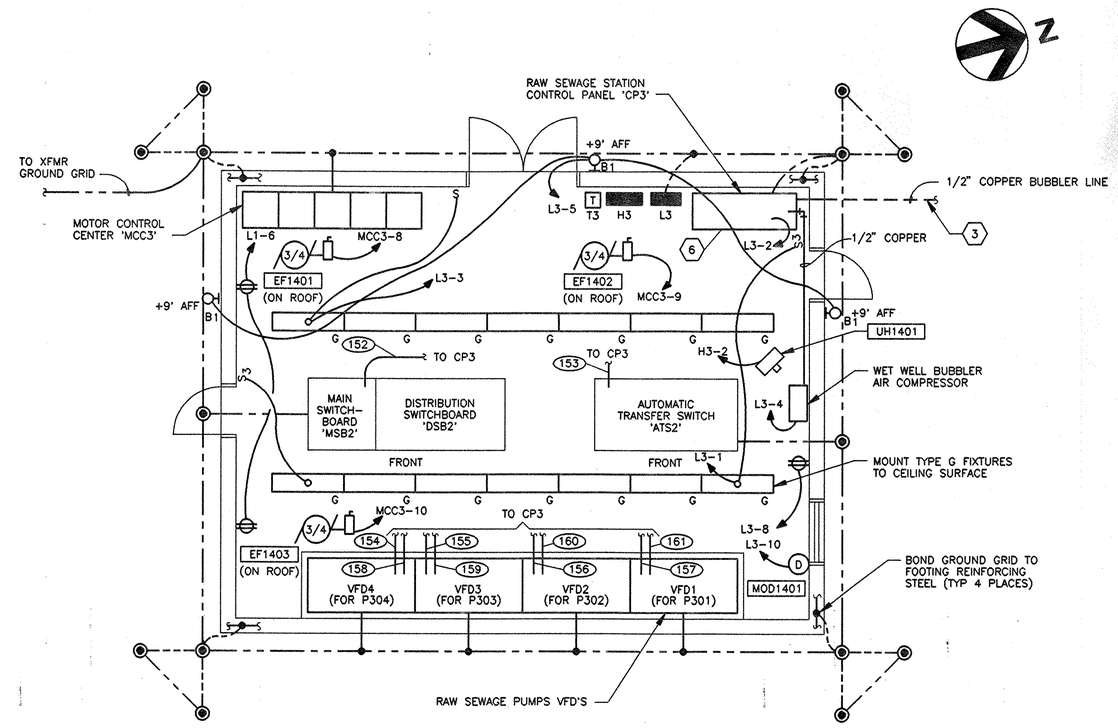


FLOOR PLAN – ELECTRICAL BUILDING

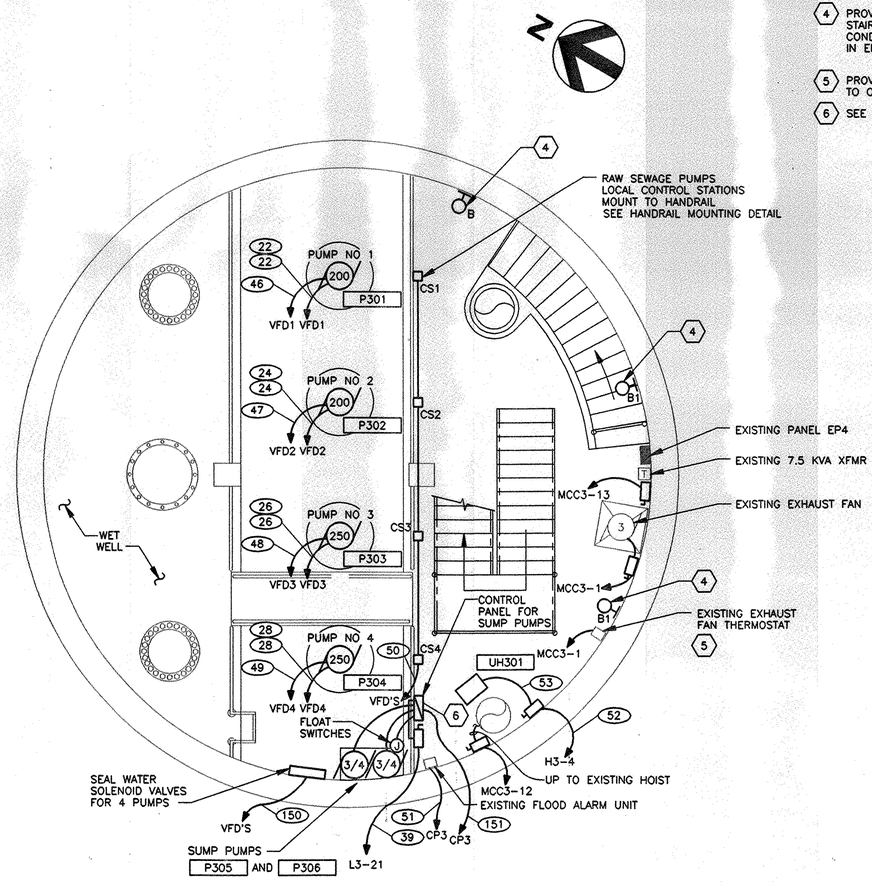


INTERMEDIATE LEVEL FLOOR PLAN

| Issue No. | Description | Date | Drwn. | Chkd. | Resp. Engr. | Proj. Mgr. |
|---|---|---|---|---|---|---|
| R | RECORD DRAWING | 6/97 | | | | |
| O | ISSUE FOR CONSTRUCTION | 5/19/94 | | | | |
| C | CONFORM TO ADDENDA NO 3 | 2/17/94 | | | | |
| B | ISSUED FOR BIDS | 1/10/94 | | | | |
| A | ISSUED FOR APPROVAL | 6/15/93 | | | | |

HDR Engineering, Inc. of North Carolina

NORTH CAROLINA PROFESSIONAL SEAL 8205 RAYMOND D. HAMILTON

| | |
|---|---|
| Project Manager | R. HAMILTON |
| Architect | G. GENRICH |
| Civil | K. MOSTELLER |
| Electrical | R. MILLS |
| I&C/Process | R. HAMILTON |
| Mechanical | D. DeBOER |
| Structural | N. CABLE |
| Drawn By | D. PETERSON |

# City of Hickory
## Henry Fork WWTP Expansion and Upgrade
## Contract C – Electrical

Hickory North Carolina

# Raw Sewage Pump Station Electrical

| Date | Project No. | Sheet No. | Issue |
|---|---|---|---|
| NOV 1993 | 00231-012-018 | 1402 | R |

Scale 1/4" = 1'-0"

P:\HICKORY2\HF-1402

SPECIFIC NOTES:

1. SEE CONTROL PANEL SCHEDULE.
2. CONTROL PANEL INTEGRAL TO HVAC EQUIPMENT FURNISHED BY THE HVAC CONTRACTOR.
3. EXTEND CIRCUIT #14 FROM MCC2 TO THE MONORAIL HOIST. VERIFY LOCATION OF HOIST CABLE REEL POWER TERMINAL BOX.

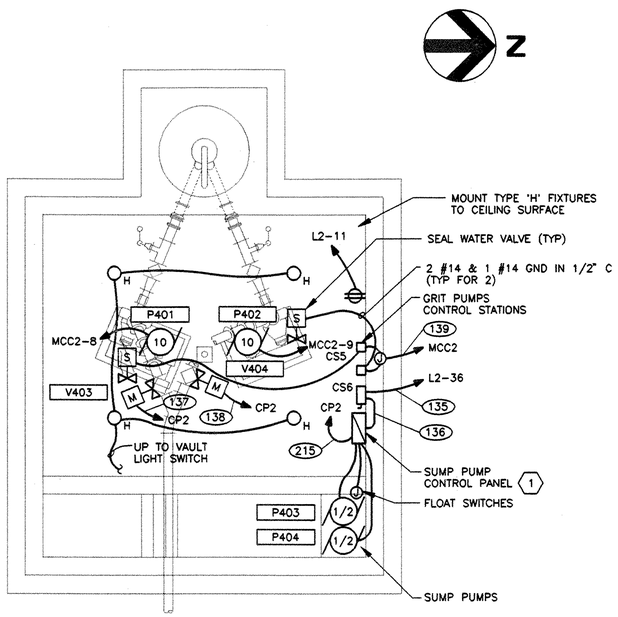


PIT PLAN

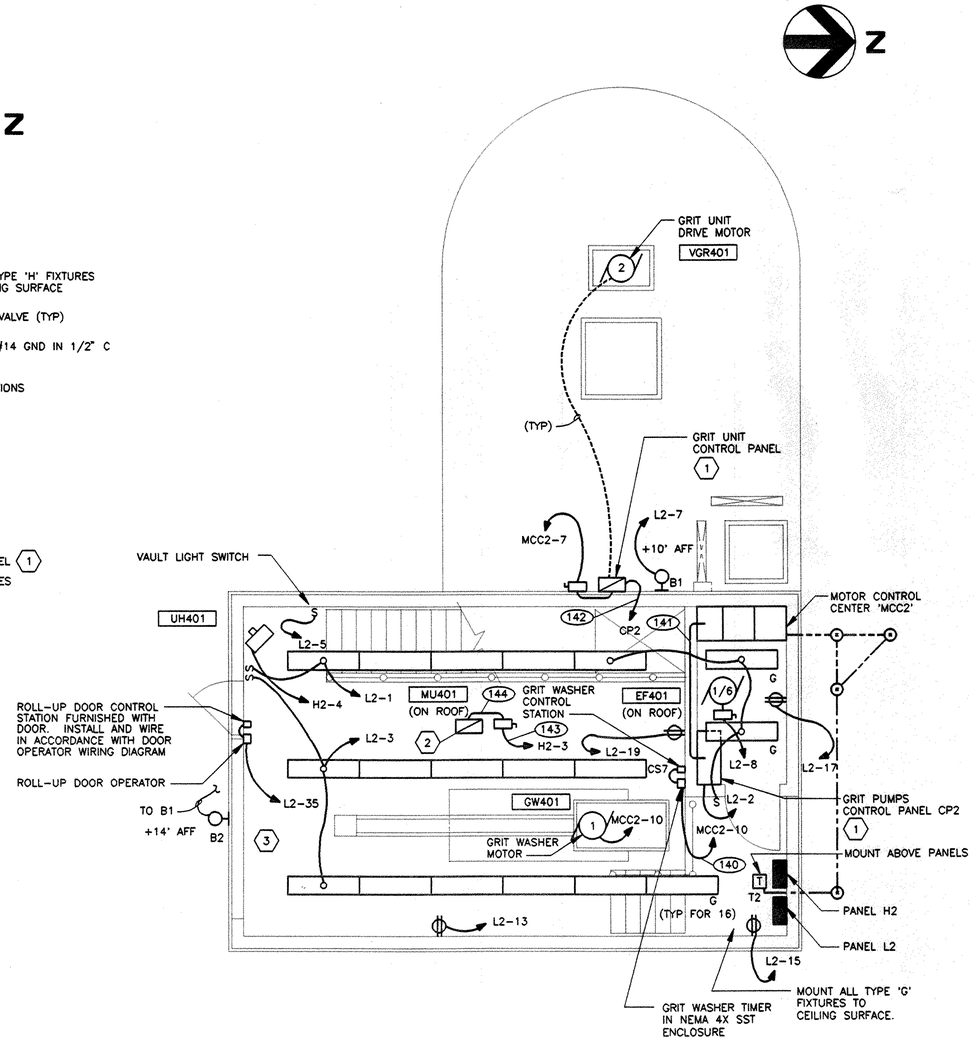


GRIT WASH ROOM AND UPPER LEVEL

HDR

HDR Engineering, Inc. of North Carolina

| Issue No. | Description | Date | Drwn. | Chkd. | Resp. Engr. | Proj. Mgr. |
|---|---|---|---|---|---|---|
| R | RECORD DRAWING | 6/97 | | | | |
| 0 | ISSUED FOR CONSTRUCTION | 5/19/94 | | | | |
| B | ISSUED FOR BIDS | 1/10/94 | | | | |
| A | ISSUED FOR APPROVAL | 6/15/93 | | | | |

NORTH CAROLINA PROFESSIONAL SEAL 5340 ENGINEER RICHARD C. MILLS 1/10/94

Project Manager: R. HAMILTON
Architect: G. GENRICH
Civil: K. MOSTELLER
Electrical: R. MILLS
I&C/Process: R. HAMILTON
Mechanical: D. DeBOER
Structural: N. CABLE
Drawn By: D. PETERSON

City of Hickory
Henry Fork WWTP
Expansion and Upgrade
Contract C - Electrical

Hickory North Carolina

Grit Building
Electrical

Date: NOV 1993
Scale: 1/4" = 1'-0"
Project No.: 00231-012-018
Sheet No.: 1403
Issue: R

P:\HICKORY2\WF-1403

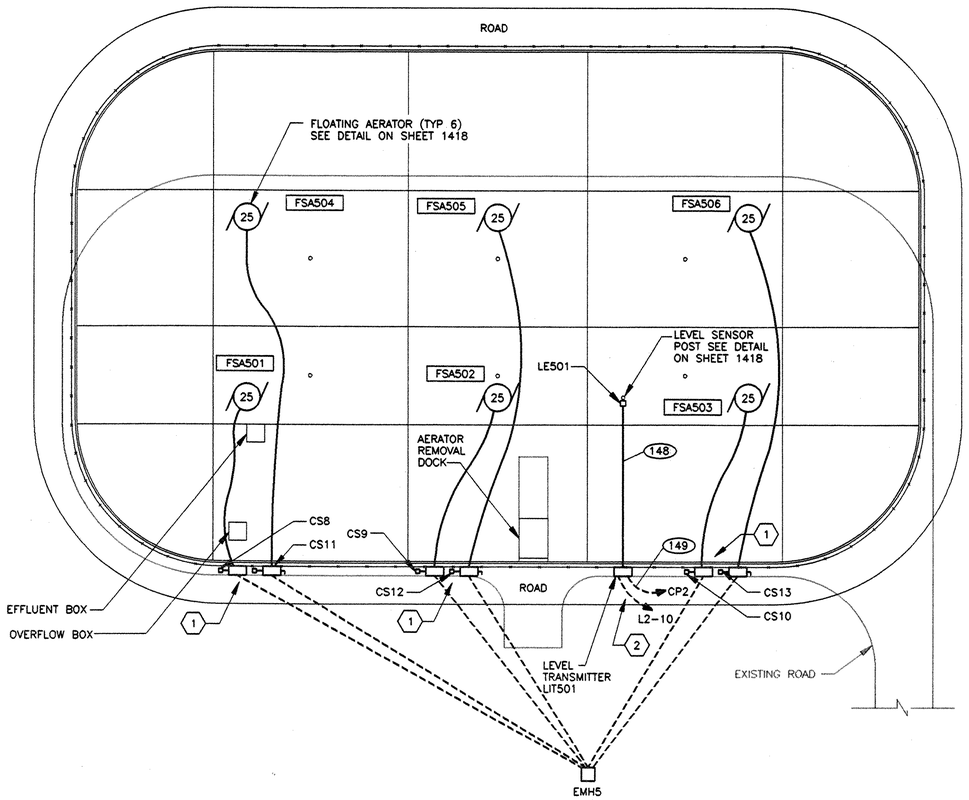


## EQUALIZATION BASIN – PLAN

SCALE: 1" = 20'

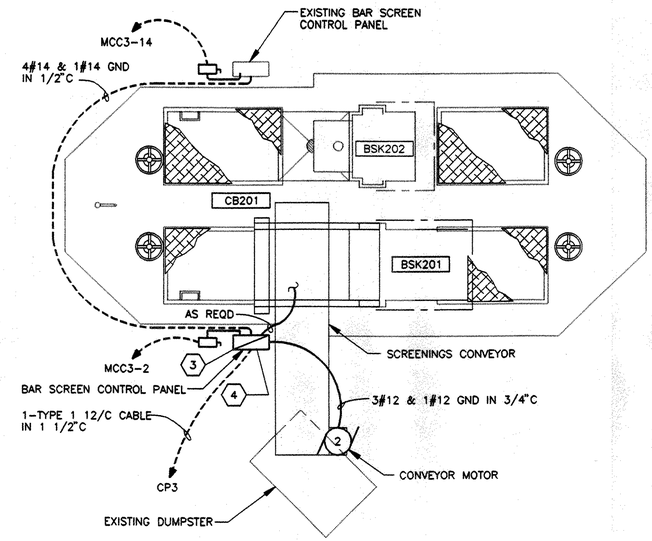


## MECHANICAL BAR SCREEN PLAN

SCALE: 1/4" = 1'-0"

SPECIFIC NOTES:

1. MOUNT DISCONNECT SWITCHES AND CONTROL STATIONS ON EQUIPMENT SUPPORT FRAME. SEE DETAIL FOR FRAME.
2. MOUNT LEVEL TRANSMITTER LIT501 ON EQUIPMENT SUPPORT FRAME. SEE DETAIL FOR FRAME.
3. SEE CONTROL PANEL SCHEDULE
3. MOUNT BAR SCREEN CONTROL PANEL AND DISCONNECT SWITCH ON EQUIPMENT SUPPORT FRAME. SEE SUPPORT FRAME DETAIL.

HDR Engineering, Inc. of North Carolina

| Issue No. | Description | Date | Drwn. | Chkd. | Resp. Engr. | Proj. Mgr. |
|---|---|---|---|---|---|---|
| R | RECORD DRAWING | 6/97 | | | | |
| 0 | ISSUED FOR CONSTRUCTION | 5/19/94 | | | | |
| B | ISSUED FOR BIDS | 1/10/94 | | | | |
| A | ISSUED FOR APPROVAL | 6/15/93 | | | | |

NORTH CAROLINA PROFESSIONAL SEAL 5340 ENGINEER RICHARD C. MILLS 1/10/94

Project Manager: R. HAMILTON
Architect: G. GENRICH
Civil: C. SHUE
Electrical: R. MILLS
I&C/Process: R. HAMILTON
Mechanical: D. DeBOER
Structural: N. CABLE
Drawn By: D. PETERSON

City of Hickory
Henry Fork WWTP
Expansion and Upgrade
Contract C – Electrical
Hickory North Carolina

Equalization Basin
Electrical

Date: NOV 1993
Scale: AS NOTED
Project No.: 00231-012-018
Sheet No.: 1404
Issue: R

P:\HICKORY\HF-1404

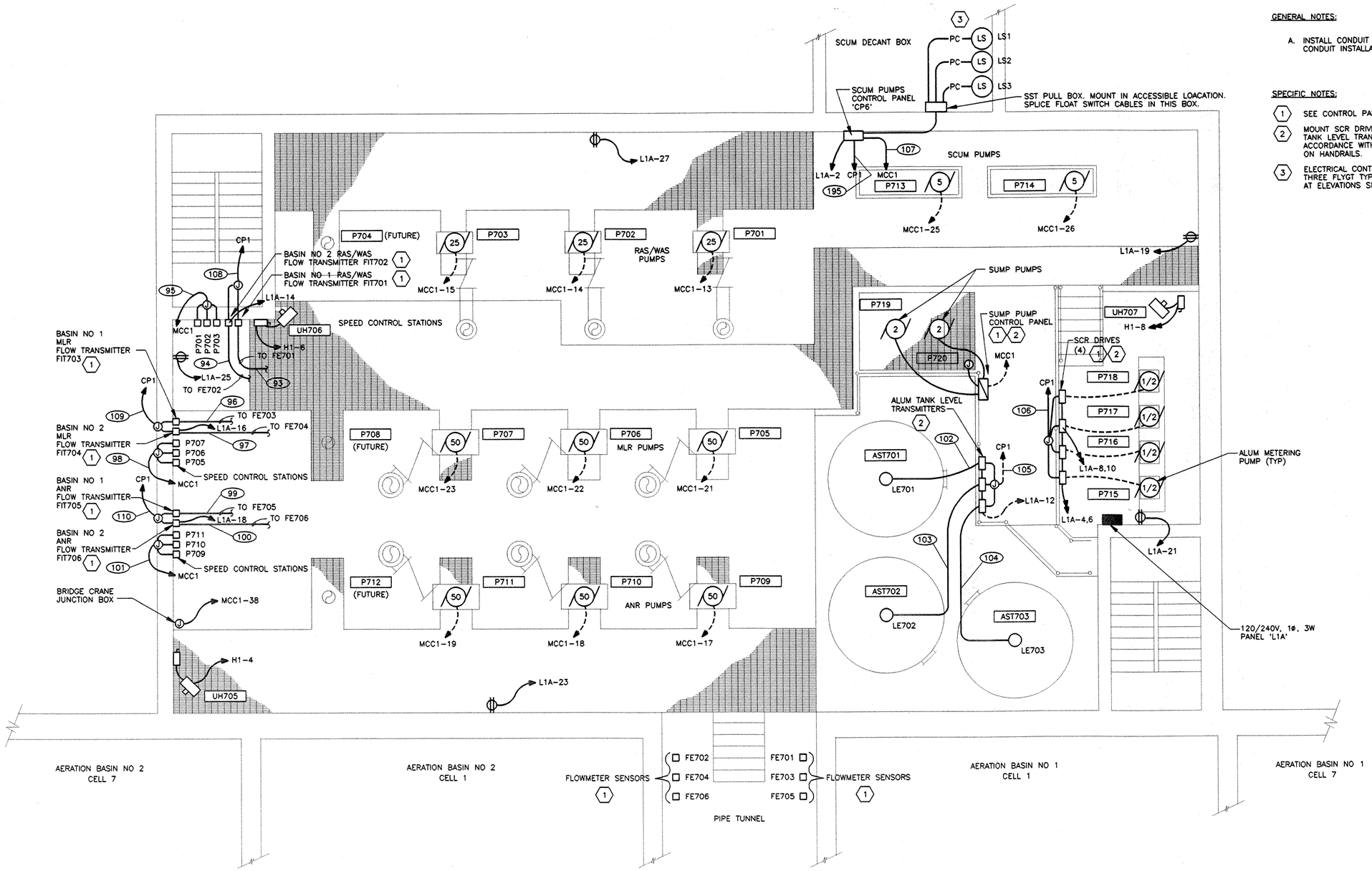


GENERAL NOTES:

A. INSTALL CONDUIT AS SHOWN IN PROCESS BUILDING CONDUIT INSTALLATION DETAIL ON SHEET 1419

SPECIFIC NOTES:

1. SEE CONTROL PANEL SCHEDULE
2. MOUNT SCR DRIVES, SUMP PUMP PANEL, AND ALUM TANK LEVEL TRANSMITTER TO HANDRAIL IN ACCORDANCE WITH MOUNTING DETAIL FOR EQUIPMENT ON HANDRAILS.
3. ELECTRICAL CONTRACTOR TO FURNISH AND INSTALL THREE FLYGT TYPE LNH FLOAT SWITCHES. SET FLOATS AT ELEVATIONS SHOWN ON GENERAL CONTRACT DRAWINGS.

HDR Engineering, Inc. of North Carolina

| Issue No. | Description | Date | Drwn. | Chkd. | Resp. Engr. | Proj. Mgr. |
|---|---|---|---|---|---|---|
| R | RECORD DRAWING | 6/97 | | | | |
| 0 | ISSUED FOR CONSTRUCTION | 5/19/94 | | | | |
| B | ISSUED FOR BIDS | 1/10/94 | | | | |
| A | ISSUED FOR APPROVAL | 6/15/93 | | | | |

NORTH CAROLINA PROFESSIONAL SEAL 5340 ENGINEER RICHARD C. MILLS 1/10/94

Project Manager: R. HAMILTON
Architect: G. GENRICH
Civil: K. MOSTELLER
Electrical: R. MILLS
I&C/Process: R. HAMILTON
Mechanical: D. DeBOER
Structural: N. CABLE
Drawn By: D. PETERSON

# City of Hickory
## Henry Fork WWTP
## Expansion and Upgrade
## Contract C - Electrical

Hickory North Carolina

# Process Building - Electrical Pump Level Floor Plan

Date: NOV 1993
Scale: 1/4" = 1'-0"
Project No.: 00231-012-018
Sheet No.: 1405
Issue: R

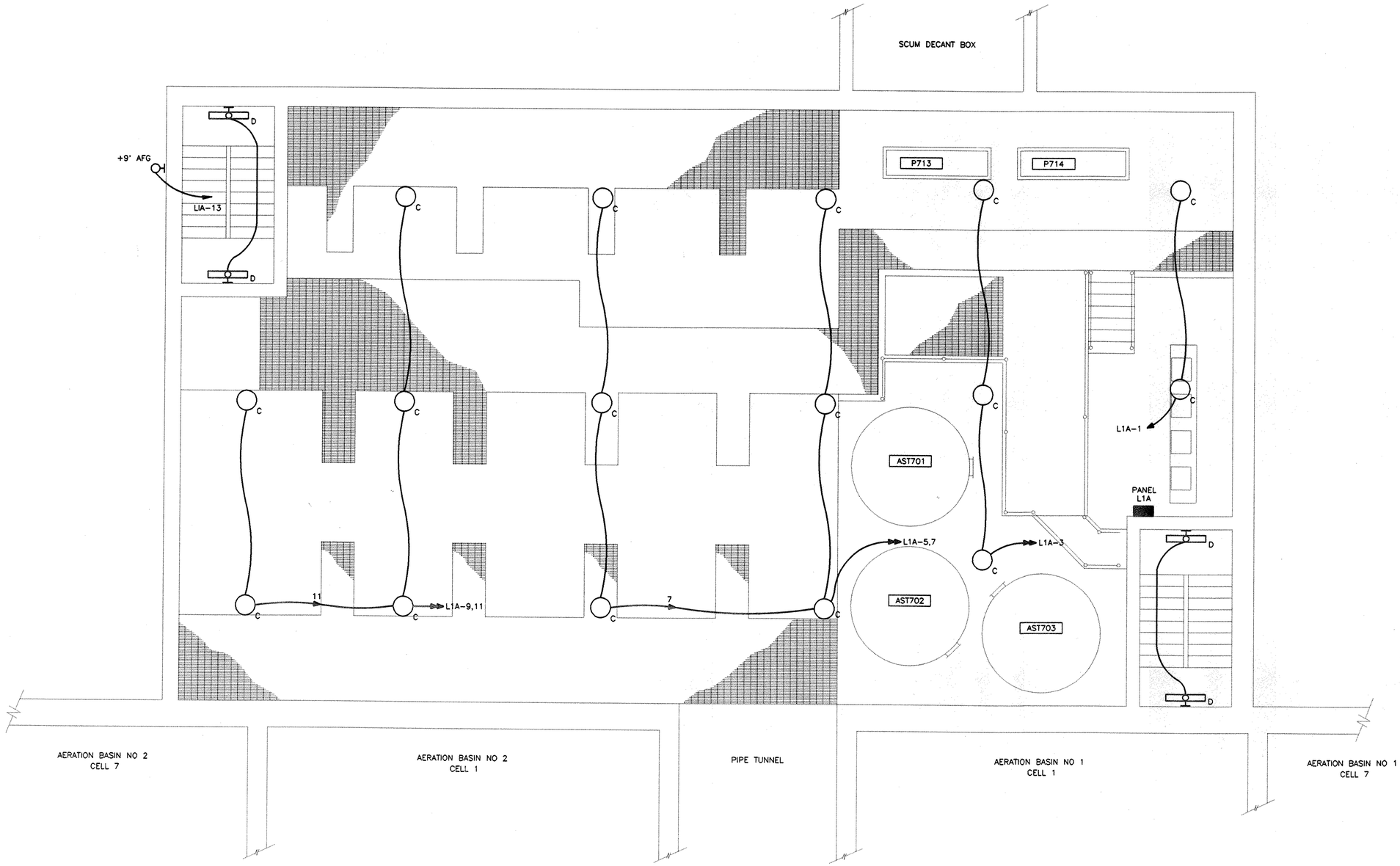


HDR

HDR Engineering, Inc.
of North Carolina

| Issue No. | Description | Date | Drawn. | Chkd. | Resp. Engr. | Proj. Mgr. |
|---|---|---|---|---|---|---|
| R | RECORD DRAWING | 6/97 | | | | |
| 0 | ISSUED FOR CONSTRUCTION | 5/19/94 | | | | |
| B | ISSUED FOR BIDS | 1/10/94 | | | | |
| A | ISSUED FOR APPROVAL | 6/15/93 | | | | |

NORTH CAROLINA PROFESSIONAL SEAL 5340 ENGINEER RICHARD C. MILLS
1/10/94

Project Manager: R. HAMILTON
Architect: G. GENRICH
Civil: K. MOSTELLER
Electrical: R. MILLS
I&C/Process: R. HAMILTON
Mechanical: D. DeBOER
Structural: N. CABLE
Drawn By: D. PETERSON

# City of Hickory
## Henry Fork WWTP
## Expansion and Upgrade
## Contract C - Electrical

Hickory North Carolina

# Process Building - Lighting Pump Level Floor Plan

| Date | Project No. | Sheet No. | Issue |
|---|---|---|---|
| NOV 1993 | 00231-012-018 | 1406 | R |
| Scale 1/4" = 1'-0" | | | |

P:\HICKORY2\HF-1406

GENERAL NOTES:

A. INSTALL CONDUIT AS SHOWN IN PROCESS BUILDING CONDUIT INSTALLATION DETAIL.

SPECIFIC NOTES:

(1) SEE CONTROL PANEL SCHEDULE.

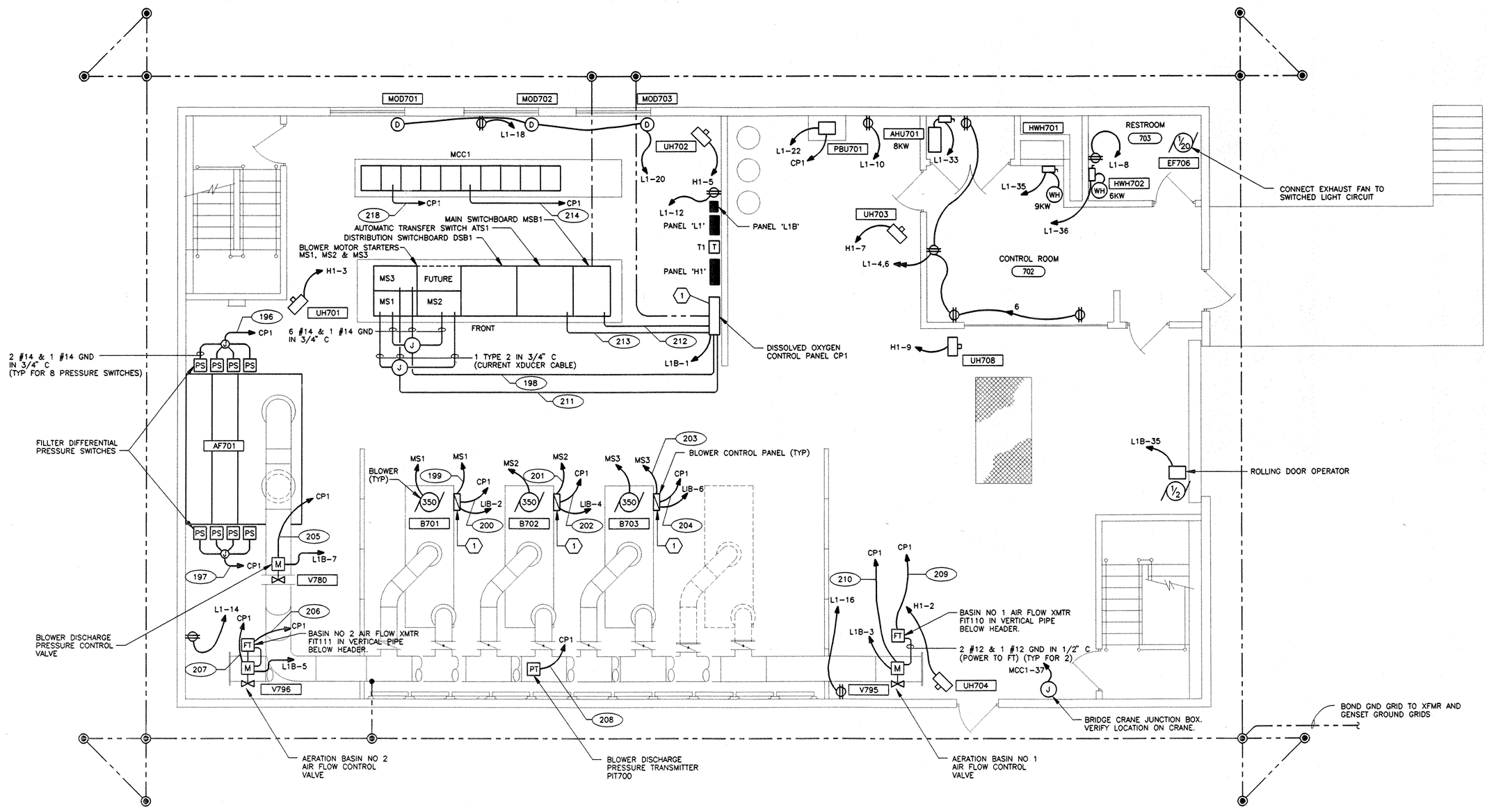


HDR

HDR Engineering, Inc. of North Carolina

| Issue No. | Description | Date | Drawn. | Chkd. | Resp. Engr. | Proj. Mgr. |
|---|---|---|---|---|---|---|
| R | RECORD DRAWING | 6/97 | | | | |
| 0 | ISSUED FOR CONSTRUCTION | 5/19/94 | | | | |
| B | ISSUED FOR BIDS | 1/10/94 | | | | |
| A | ISSUED FOR APPROVAL | 6/15/93 | | | | |

NORTH CAROLINA PROFESSIONAL SEAL ENGINEER 5340 RICHARD C. MILLS 1/10/94

| | |
|---|---|
| Project Manager: R. HAMILTON | |
| Architect: G. GENRICH | I&C/Process: R. HAMILTON |
| Civil: K. MOSTELLER | Mechanical: D. DeBOER |
| Electrical: R. MILLS | Structural: N. CABLE |
| | Drawn By: D. PETERSON |

# City of Hickory
## Henry Fork WWTP
## Expansion and Upgrade
## Contract C - Electrical

Hickory North Carolina

# Process Building - Electrical
## Upper Level Floor Plan

| Date | Project No. | Sheet No. | Issue |
|---|---|---|---|
| NOV 1993 | 00231-012-018 | 1407 | R |

Scale: 1/4" = 1'-0"

P:\HICKORY2\HF-1407

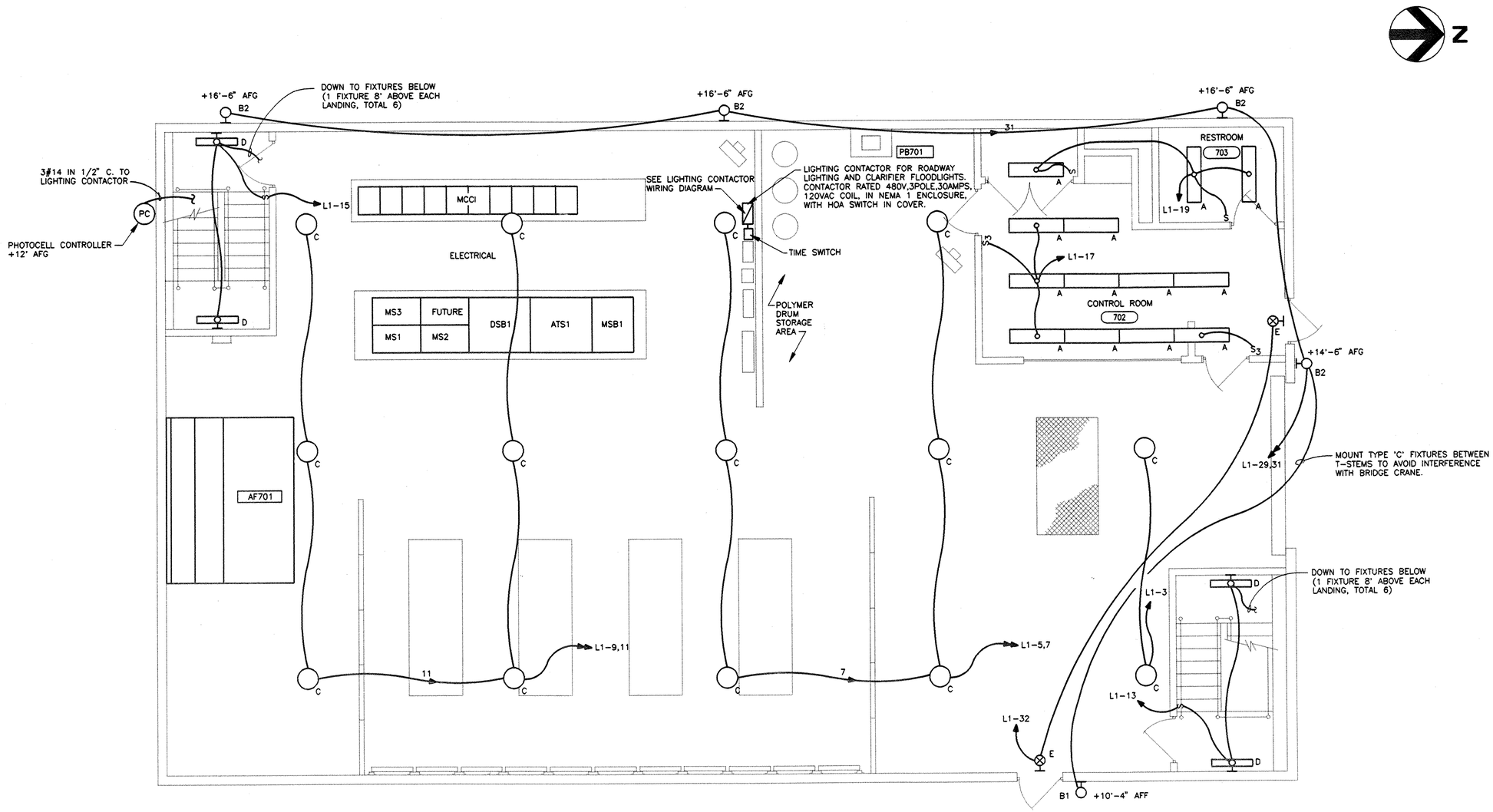


HDR

HDR Engineering, Inc. of North Carolina

| Issue No. | Description | Date | Drwn. | Chkd. | Resp. Engr. | Proj. Mgr. |
|---|---|---|---|---|---|---|
| R | RECORD DRAWING | 6/97 | | | | |
| 0 | ISSUED FOR CONSTRUCTION | 5/19/94 | | | | |
| B | ISSUED FOR BIDS | 1/10/94 | | | | |
| A | ISSUED FOR APPROVAL | 6/15/93 | | | | |

NORTH CAROLINA PROFESSIONAL SEAL 5340 ENGINEER RICHARD C. MILLS
1/10/94

Project Manager: R. HAMILTON
Architect: G. GENRICH
I&C/Process: R. HAMILTON
Civil: K. MOSTELLER
Mechanical: D. DeBOER
Electrical: R. MILLS
Structural: N. CABLE
Drawn By: D. PETERSON

City of Hickory
Henry Fork WWTP
Expansion and Upgrade
Contract C - Electrical

Hickory North Carolina

Process Building - Lighting
Upper Level Floor Plan

Date: NOV 1993
Scale: 1/4" = 1'-0"
Project No.: 00231-012-018
Sheet No.: 1408
Issue: R

P:\HICKORY2\HF-1408

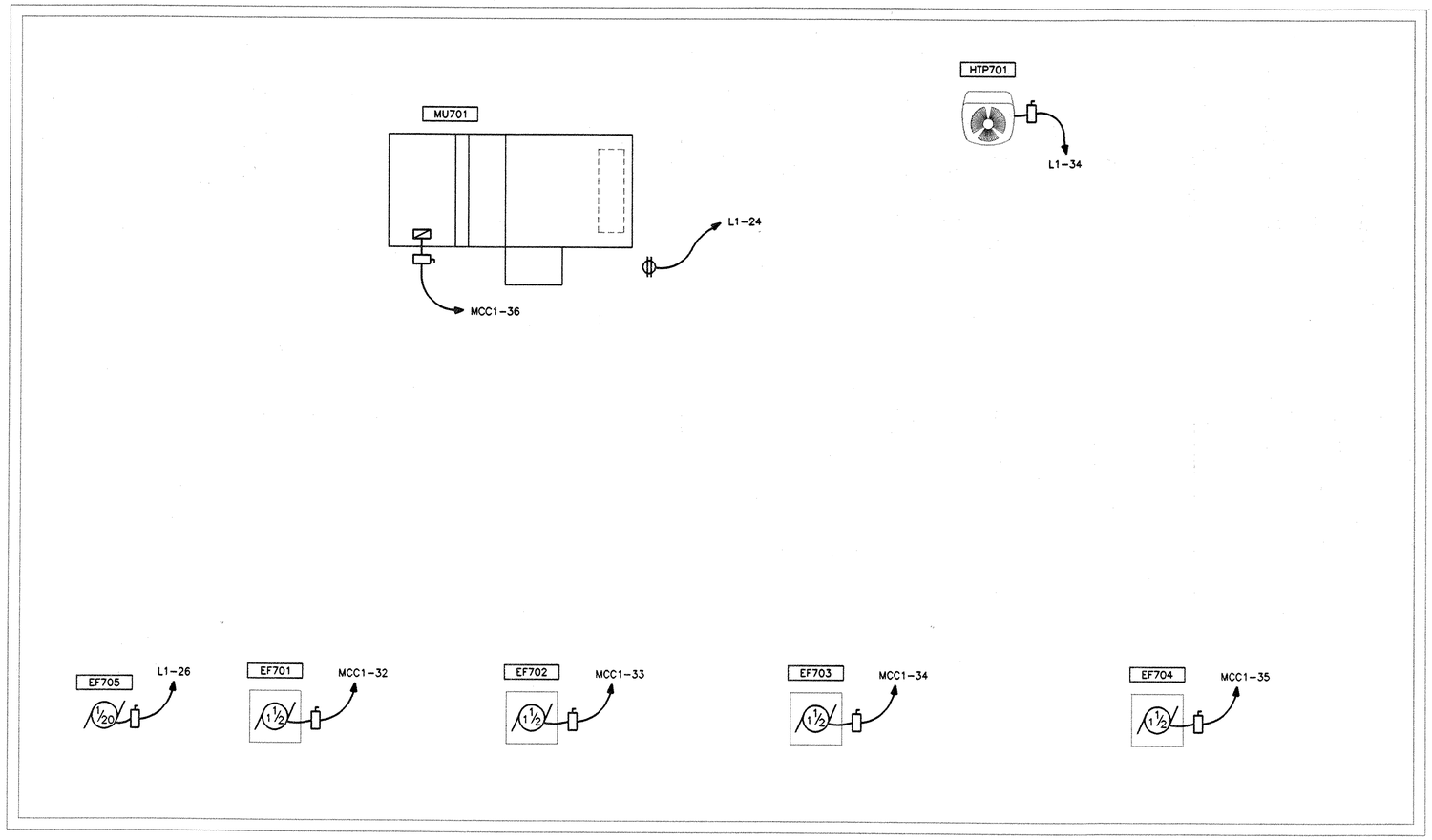


HDR

HDR Engineering, Inc. of North Carolina

| Issue No. | Description | Date | Drwn. | Chkd. | Resp. Engr. | Proj. Mgr. |
|---|---|---|---|---|---|---|
| R | RECORD DRAWING | 6/97 | | | | |
| 0 | ISSUED FOR CONSTRUCTION | 5/19/94 | | | | |
| B | ISSUED FOR BIDS | 1/10/94 | | | | |
| A | ISSUED FOR APPROVAL | 5/15/93 | | | | |

NORTH CAROLINA PROFESSIONAL SEAL 15340 ENGINEER RICHARD C. MILLS
1/10/94

Project Manager: R. HAMILTON
Architect: G. GENRICH
Civil: K. MOSTELLER
Electrical: R. MILLS
I&C/Process: R. HAMILTON
Mechanical: D. DeBOER
Structural: N. CABLE
Drawn By: D. PETERSON

# City of Hickory
## Henry Fork WWTP
## Expansion and Upgrade
## Contract C - Electrical

Hickory North Carolina

# Process Building - Electrical Roof Plan

Date: NOV 1993
Scale: 1/4" = 1'-0"
Project No: 00231-012-018
Sheet No: 1409
Issue: R

P:\HICKORY2\HF-1409

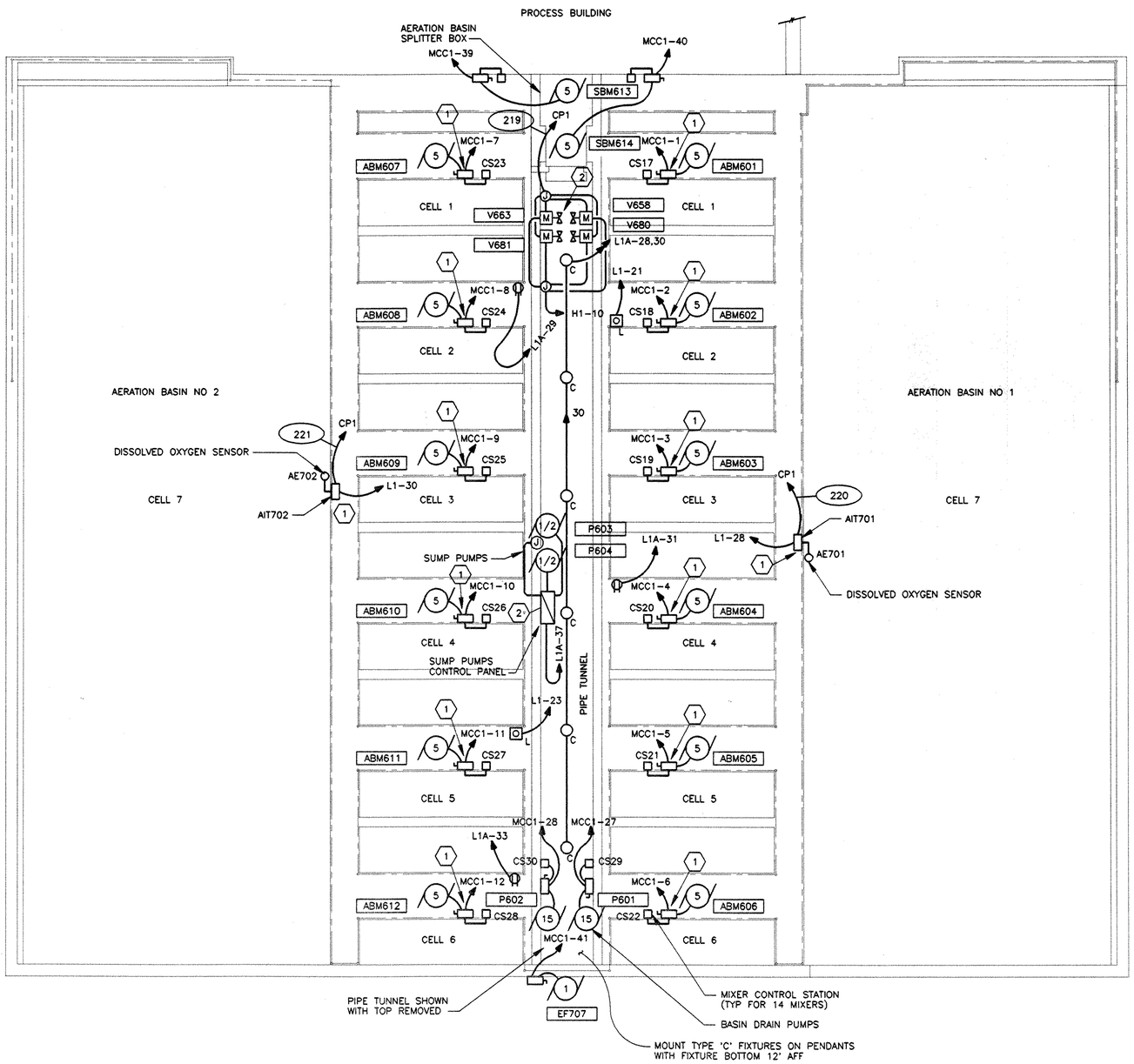


## AERATION BASINS – PLAN

SCALE: 3/32" = 1'-0"

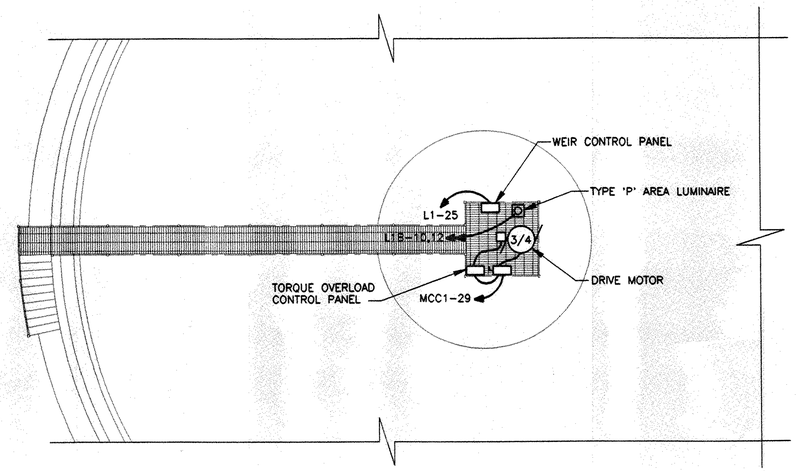


## SECONDARY CLARIFIER PARTIAL PLAN

SCALE: 1/4" = 1'-0"

(TYPICAL FOR 2 CLARIFIERS)
(SHOWN FOR CLARIFIER NO 1)

SPECIFIC NOTES:

1. MOUNT ELECTRICAL EQUIPMENT TO HANDRAIL AS SHOWN IN HANDRAIL MOUNTING DETAIL
2. SEE CONTROL PANEL SCHEDULE

HDR

HDR Engineering, Inc. of North Carolina

| Issue No. | Description | Date | Drawn. | Chkd. | Resp. Engr. | Proj. Mgr. |
|---|---|---|---|---|---|---|
| R | RECORD DRAWING | 6/97 | | | | |
| 0 | ISSUED FOR CONSTRUCTION | 5/19/94 | | | | |
| B | ISSUED FOR BIDS | 1/10/94 | | | | |
| A | ISSUED FOR APPROVAL | 6/15/93 | | | | |

NORTH CAROLINA PROFESSIONAL SEAL 5340 ENGINEER RICHARD C. MILLS 1/10/94

Project Manager: R. HAMILTON
Architect: G. GENRICH
Civil: K. MOSTELLER
Electrical: R. MILLS
I&C/Process: R. HAMILTON
Mechanical: D. DeBOER
Structural: N. CABLE
Drawn By: D. PETERSON

City of Hickory
Henry Fork WWTP
Expansion and Upgrade
Contract C - Electrical

Hickory North Carolina

Aeration Basins - Electrical

| Date | Project No. | Sheet No. | Issue |
|---|---|---|---|
| NOV 1993 | 00231-012-018 | 1410 | R |

Scale: AS NOTED

P:\HICKORY2\HF-1410

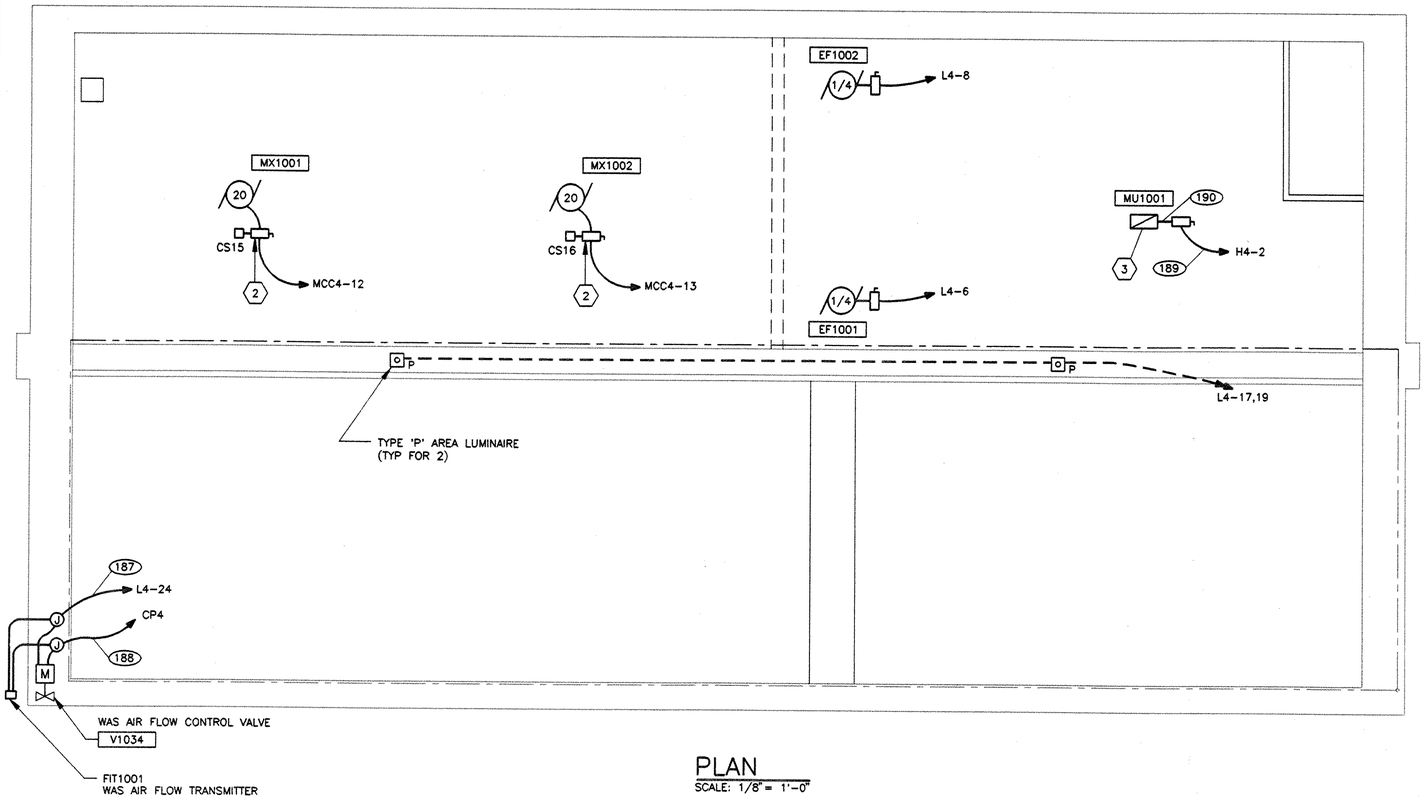


## PLAN
SCALE: 1/8" = 1'-0"

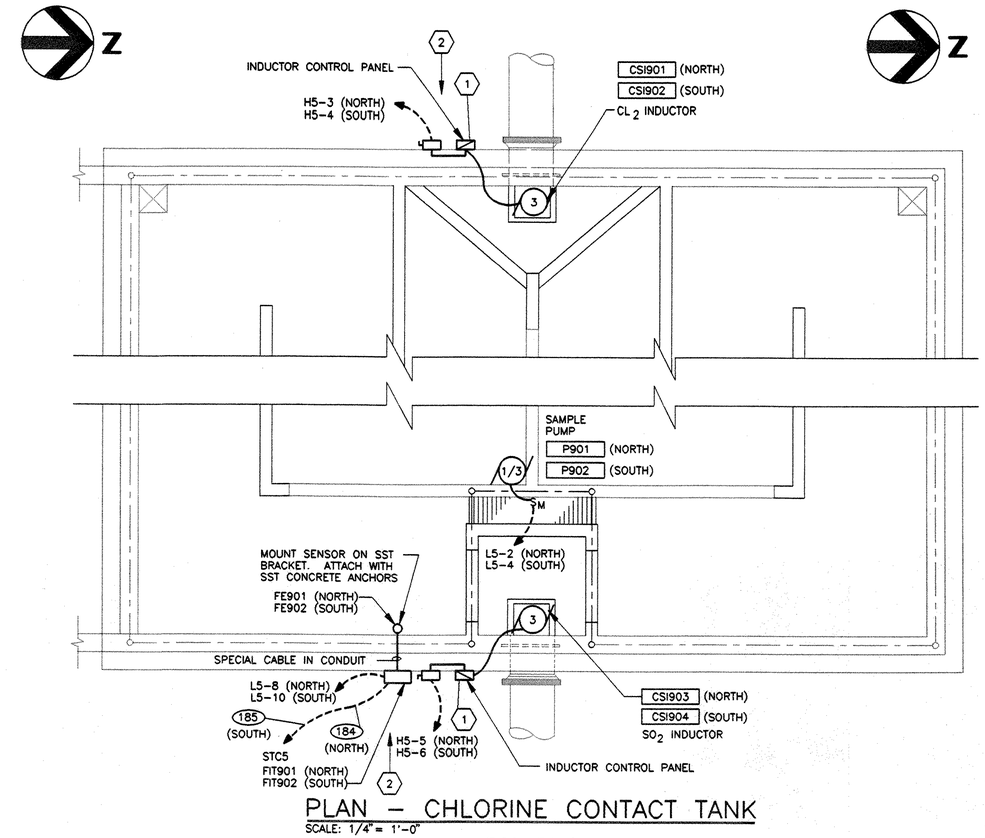


## PLAN – CHLORINE CONTACT TANK
SCALE: 1/4" = 1'-0"

(TYPICAL FOR 2)

SPECIFIC NOTES:

1. SEE CONTROL PANEL SCHEDULE.
2. MOUNT INDICATED EQUIPMENT ON EQUIPMENT SUPPORT FRAME. SEE SUPPORT FRAME DETAIL.
3. CONTROL PANEL FURNISHED BY THE HVAC CONTRACTOR.

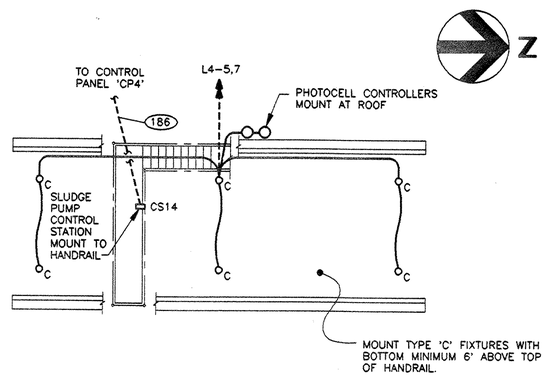


## PLAN – SLUDGE TRUCK LOADING FACILITY
SCALE: 1/8" = 1'-0"

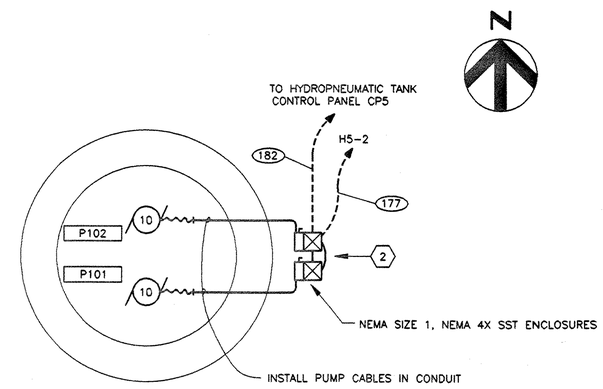


## PLAN – PLANT WATER PUMPS
NO SCALE

HDR

HDR Engineering, Inc.
of North Carolina

| Issue No. | Description | Date | Drwn. | Chkd. | Resp. Engr. | Proj. Mgr. |
|---|---|---|---|---|---|---|
| R | RECORD DRAWING | 6/97 | | | | |
| 0 | ISSUED FOR CONSTRUCTION | 5/19/94 | | | | |
| B | ISSUED FOR BIDS | 1/10/94 | | | | |
| A | ISSUED FOR APPROVAL | 6/15/93 | | | | |

NORTH CAROLINA PROFESSIONAL SEAL 5340 ENGINEER RICHARD C. MILLS
1/10/94

Project Manager: R. HAMILTON
Architect: G. GENRICH
Civil: K. MOSTELLER
Electrical: R. MILLS
I&C/Process: R. HAMILTON
Mechanical: D. DeBOER
Structural: N. CABLE
Drawn By: D. PETERSON

# City of Hickory
## Henry Fork WWTP
## Expansion and Upgrade
## Contract C - Electrical

Hickory North Carolina

## Sludge Storage Basin
## Electrical

| Date | Project No. | Sheet No. | Issue |
|---|---|---|---|
| NOV 1993 | 00231-012-018 | 1411 | R |
| Scale: AS NOTED | | | |

P:\HICKORY2\HF-1411

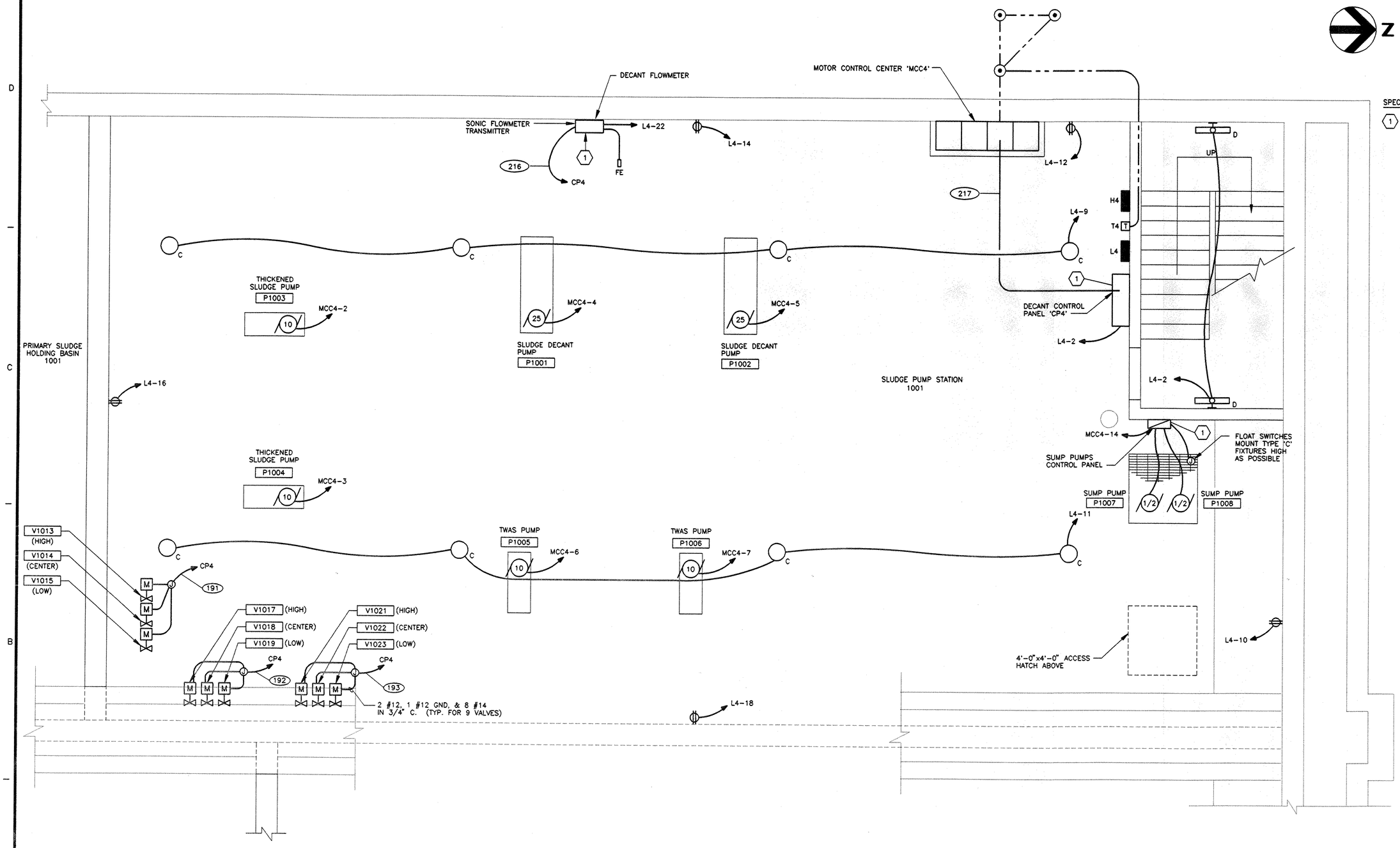


SPECIFIC NOTES:

(1) SEE CONTROL PANEL SCHEDULE

HDR

HDR Engineering, Inc. of North Carolina

| Issue No. | Description | Date | Drwn. | Chkd. | Resp. Engr. | Proj. Mgr. |
|---|---|---|---|---|---|---|
| R | RECORD DRAWING | 6/97 | | | | |
| 0 | ISSUED FOR CONSTRUCTION | 5/19/94 | | | | |
| B | ISSUED FOR BIDS | 1/10/94 | | | | |
| A | ISSUED FOR APPROVAL | 5/15/93 | | | | |

NORTH CAROLINA PROFESSIONAL SEAL ENGINEER 5340 RICHARD C. MILLS 1/10/94

Project Manager: R. HAMILTON
Architect: G. GENRICH
Civil: K. MOSTELLER
Electrical: R. MILLS
I&C/Process: R. HAMILTON
Mechanical: D. DeBOER
Structural: N. CABLE
Drawn By: D. PETERSON

# City of Hickory
## Henry Fork WWTP
## Expansion and Upgrade
## Contract C - Electrical

Hickory North Carolina

## Sludge Pumping Room Plan

| Date | Project No. | Sheet No. | Issue |
|---|---|---|---|
| NOV 1993 | 00231-012-018 | 1412 | R |

Scale: 3/8"=1'-0"

P:\HICKORY2\HF-1412

SPECIFIC NOTES:

1. NEMA SIZE 1 MOTOR STARTER IN NEMA 1 ENCLOSURE. PROVIDE HAND/OFF/AUTO SELECTOR SWITCH AND RED PILOT LIGHT IN COVER OF EACH STARTER.
2. SEE CONTROL PANEL SCHEDULE
3. CONTROL PANEL FURNISHED BY HVAC CONTRACTOR.

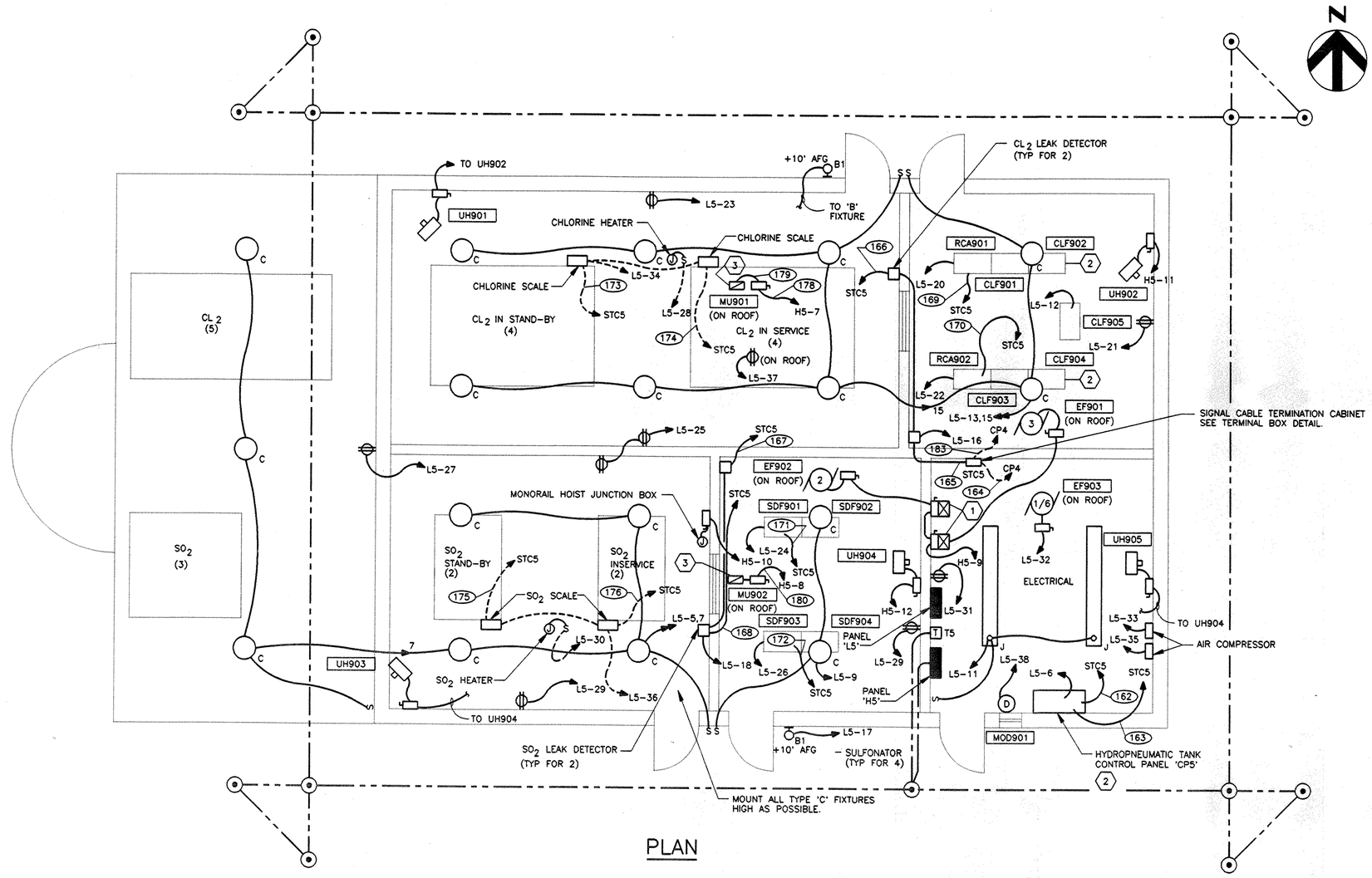


PLAN

HDR

HDR Engineering, Inc. of North Carolina

| Issue No. | Description | Date | Drwn. | Chkd. | Resp. Engr. | Proj. Mgr. |
|---|---|---|---|---|---|---|
| R | RECORD DRAWING | 6/97 | | | | |
| 0 | ISSUED FOR CONSTRUCTION | 5/19/94 | | | | |
| B | ISSUED FOR BIDS | 1/10/94 | | | | |
| A | ISSUED FOR APPROVAL | 8/15/93 | | | | |

NORTH CAROLINA PROFESSIONAL SEAL 5340 ENGINEER RICHARD C. MILLS
1/10/94

| | |
|---|---|
| Project Manager: R. HAMILTON | |
| Architect: G. GENRICH | I&C/Process: R. HAMILTON |
| Civil: K. MOSTELLER | Mechanical: D. DeBOER |
| Electrical: R. MILLS | Structural: N. CABLE |
| | Drawn By: D. PETERSON |

# City of Hickory
## Henry Fork WWTP
## Expansion and Upgrade
## Contract C - Electrical

Hickory North Carolina

# Chlorine Building Electrical

| Date | Project No. | Sheet No. | Issue |
|---|---|---|---|
| NOV 1993 | 00231-012-018 | 1413 | R |
| Scale 1/4" = 1'-0" | | | |

P:\HICKORY2\HF-1413

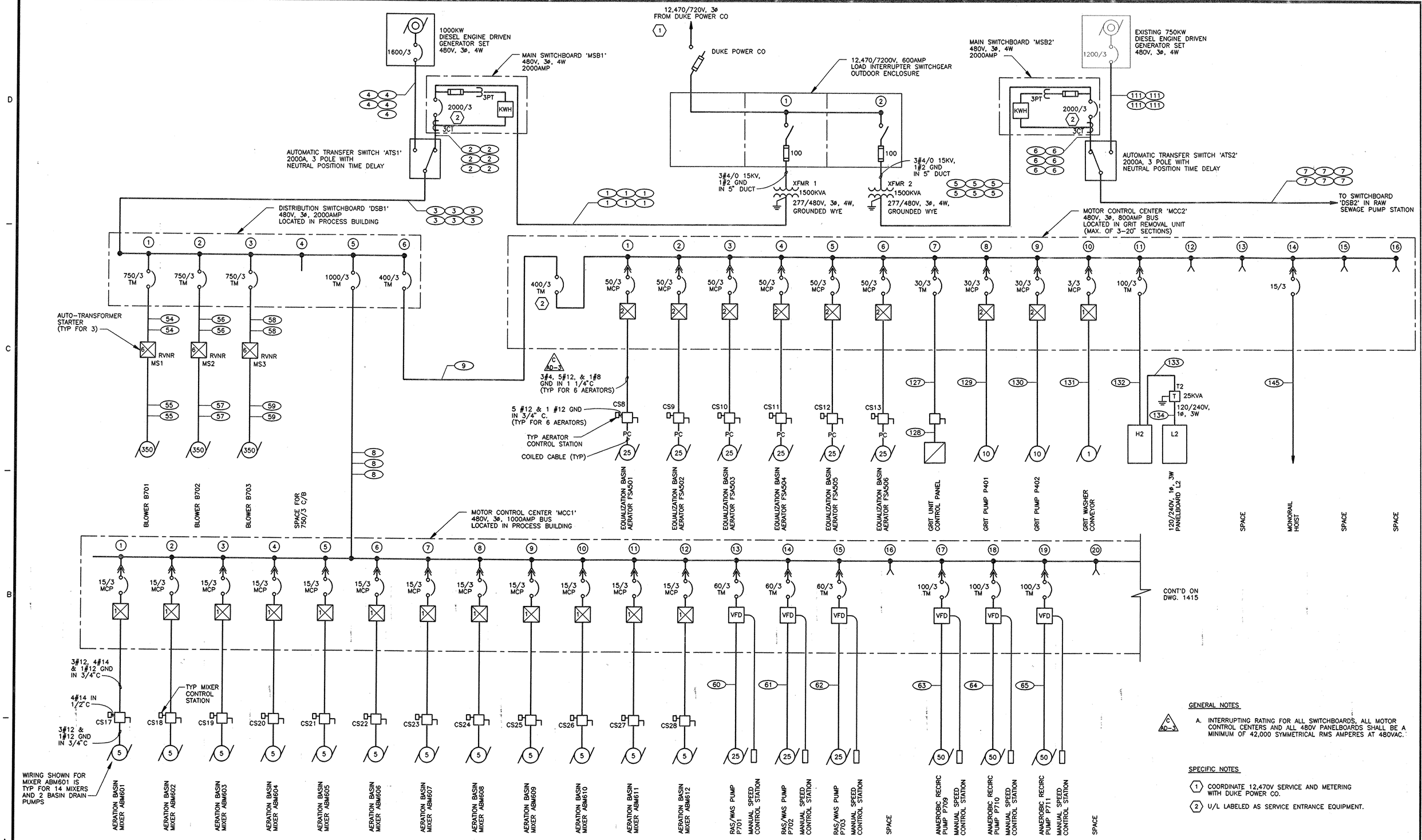


GENERAL NOTES

A. INTERRUPTING RATING FOR ALL SWITCHBOARDS, ALL MOTOR CONTROL CENTERS AND ALL 480V PANELBOARDS SHALL BE A MINIMUM OF 42,000 SYMMETRICAL RMS AMPERES AT 480VAC.

SPECIFIC NOTES

1. COORDINATE 12,470V SERVICE AND METERING WITH DUKE POWER CO.
2. U/L LABELED AS SERVICE ENTRANCE EQUIPMENT.

HDR

HDR Engineering, Inc. of North Carolina

| Issue No. | Description | Date | Drwn. | Chkd. | Resp. Engr. | Proj. Mgr. |
|---|---|---|---|---|---|---|
| R | RECORD DRAWING | 6/97 | | | | |
| O | ISSUE FOR CONSTRUCTION | 5/19/94 | | | | |
| C | CONFORM TO ADDENDA NO 3 | 2/17/94 | | | | |
| B | ISSUED FOR BIDS | 1/10/94 | | | | |
| A | ISSUED FOR APPROVAL | 6/15/93 | | | | |

NORTH CAROLINA PROFESSIONAL SEAL 8205 ENGINEER

Project Manager: R. HAMILTON
Architect: G. GENRICH
Civil: K. MOSTELLER
Electrical: R. MILLS
I&C/Process: R. HAMILTON
Mechanical: D. DeBOER
Structural: N. CABLE
Drawn By: D. PETERSON

# City of Hickory
## Henry Fork WWTP Expansion and Upgrade
## Contract C - Electrical

Hickory North Carolina

## One-Line Diagram MCC1 and MCC2

| Date | Project No. | Sheet No. | Issue |
|---|---|---|---|
| NOV 1993 | 00231-012-018 | 1414 | R |

Scale: NO SCALE

P:\HICKORY2\HF-1414

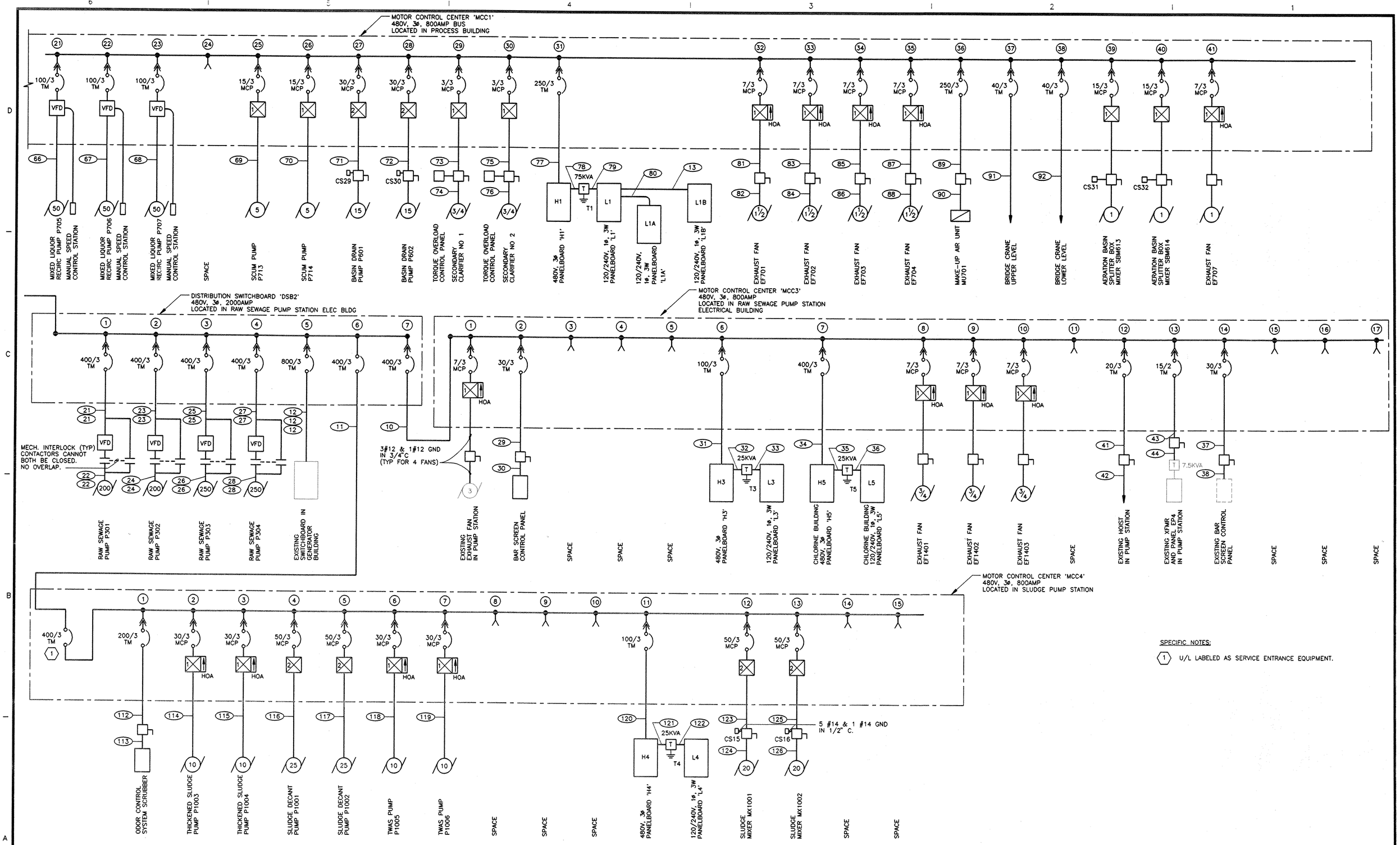


SPECIFIC NOTES:

(1) U/L LABELED AS SERVICE ENTRANCE EQUIPMENT.

HDR Engineering, Inc. of North Carolina

| Issue No. | Description | Date | Drwn. | Chkd. | Resp. Engr. | Proj. Mgr. |
|---|---|---|---|---|---|---|
| R | RECORD DRAWING | 6/97 | | | | |
| 0 | ISSUED FOR CONSTRUCTION | 5/19/94 | | | | |
| B | ISSUED FOR BIDS | 1/10/94 | | | | |
| A | ISSUED FOR APPROVAL | 6/15/93 | | | | |

NORTH CAROLINA PROFESSIONAL ENGINEER SEAL 5340 RICHARD C. MILLS 1/10/94

Project Manager: R. HAMILTON
Architect: G. GENRICH
Civil: K. MOSTELLER
Electrical: R. MILLS
I&C/Process: R. HAMILTON
Mechanical: D. DeBOER
Structural: N. CABLE
Drawn By: D. PETERSON

# City of Hickory
## Henry Fork WWTP
## Expansion and Upgrade
## Contract C - Electrical

Hickory North Carolina

# One-Line Diagram MCC3 and MCC4

| Date | Project No. | Sheet No. | Issue |
|---|---|---|---|
| NOV 1993 | 00231-012-018 | 1415 | R |

Scale: NO SCALE

P:\HICKORY2\HF-1415

PANEL DESIGNATION: H1
VOLTAGE: 480V, 3Ø
AMPERES: 250A

LOCATION: PROCESS BUILDING
MAIN: MLO
PANEL MOUNTING: SURFACE

| LOAD SERVED | CONNECTED LOAD (KVA) A | B | C | CIRCUIT BREAKER AMPS | POLES | CKT NO. | CKT NO. | CIRCUIT BREAKER AMPS | POLES | CONNECTED LOAD (KVA) A | B | C | LOAD SERVED |
|---|---|---|---|---|---|---|---|---|---|---|---|---|---|
| PANEL L1 VIA 75KVA XFMR | 27.9 | 30.1 | | 200 | 2 | 1 | 2 | 20 | 3 | 1.7 | 1.7 | 1.7 | UNIT HEATER UH704 |
| UNIT HEATER UH701 | 1.7 | 1.7 | 1.7 | 20 | 3 | 3 | 4 | 20 | 3 | 1.7 | 1.7 | 1.7 | UNIT HEATER UH705 |
| UNIT HEATER UH702 | 1.7 | 1.7 | 1.7 | 20 | 3 | 5 | 6 | 20 | 3 | 1.7 | 1.7 | 1.7 | UNIT HEATER UH706 |
| UNIT HEATER UH703 | 1.7 | 1.7 | 1.7 | 20 | 3 | 7 | 8 | 20 | 3 | 1.7 | 1.7 | 1.7 | UNIT HEATER UH707 |
| UNIT HEATER UH708 | 1.7 | 1.7 | 1.7 | 20 | 3 | 9 | 10 | 20 | 3 | 0.1 | 0.1 | 0.1 | VALVES V663,V681,V658, & V680 |
| SPACE | | | | | 3 | 11 | 12 | | 3 | | | | |
| SPACE | | | | | 3 | 13 | 14 | | 3 | | | | SPACE |
| SUB-TOTAL | 55 | 54 | 7 | | | | | | | 7 | 7 | 7 | SUB-TOTAL |

L1: 62 KVA
L2: 61 KVA
L3: 14 KVA

TOTAL CONNECTED LOAD= 137 KVA

PANEL DESIGNATION: L1
VOLTAGE: 120/240V, 1Ø, 3W
AMPERES: 400A

LOCATION: PROCESS BUILDING
MAIN: 400/2 C/B
PANEL MOUNTING: SURFACE

| LOAD SERVED | CONNECTED LOAD (KVA) L1 | L2 | CIRCUIT BREAKER AMPS | POLES | CKT NO. | CKT NO. | CIRCUIT BREAKER AMPS | POLES | CONNECTED LOAD (KVA) L1 | L2 | LOAD SERVED |
|---|---|---|---|---|---|---|---|---|---|---|---|
| PANEL L1A | 6.6 | 7.1 | 100 | 2 | 1 | 2 | 100 | 2 | 1.8 | 2.5 | PANEL L1B |
| LIGHTING | 0.6 | | 20 | 1 | 3 | 4 | 20 | 1 | 0.5 | | RECEPTACLES |
| LIGHTING | | 0.9 | 20 | 1 | 5 | 6 | 20 | 1 | | 0.5 | RECEPTACLES |
| LIGHTING | 0.9 | | 20 | 1 | 7 | 8 | 20 | 1 | 0.5 | | RECEPTACLES |
| LIGHTING | | 0.9 | 20 | 1 | 9 | 10 | 20 | 1 | | 0.5 | RECEPTACLES |
| LIGHTING | 0.9 | | 20 | 1 | 11 | 12 | 20 | 1 | 0.5 | | RECEPTACLES |
| LIGHTING | | 0.5 | 20 | 1 | 13 | 14 | 20 | 1 | | 0.5 | RECEPTACLES |
| LIGHTING | 0.5 | | 20 | 1 | 15 | 16 | 20 | 1 | 0.5 | | RECEPTACLES |
| LIGHTING | | 1.0 | 20 | 1 | 17 | 18 | 20 | 1 | | | RECEPTACLES |
| LIGHTING | 0.2 | | 20 | 1 | 19 | 20 | 20 | 1 | 0.1 | | MOD701,702,703 |
| BASIN AREA LIGHTS | | 1.0 | 20 | 1 | 21 | 22 | 20 | 1 | | 1.2 | POLYMER UNIT |
| BASIN AREA LIGHTS | 1.0 | | 20 | 1 | 23 | 24 | 20 | 1 | 0.5 | | ROOF RECEPTACLE |
| CLARIFIER NO 1 CP | | 0.8 | 20 | 1 | 25 | 26 | 20 | 1 | | 0.8 | EF705 |
| CLARIFIER NO 2 CP | 0.8 | | 20 | 1 | 27 | 28 | 20 | 1 | | | AIT701 |
| EXTERIOR LIGHTS | | 0.9 | 20 | 1 | 29 | 30 | 20 | 1 | | | AIT702 |
| EXTERIOR LIGHTS | 0.9 | | 20 | 1 | 31 | 32 | 20 | 1 | | | EXIT LIGHTS |
| AHU701 | 4.0 | 4.0 | 40 | 2 | 33 | 34 | 30 | 2 | 1.2 | 1.2 | HTP701 |
| WATER HEATER | 4.5 | 4.5 | 40 | 2 | 35 | 36 | 40 | 2 | 3.0 | 3.0 | WATER HEATER |
| SUB-TOTAL | 20.9 | 21.6 | | | | | | | 9.4 | 10.2 | SUB-TOTAL |

L1: 30.3 KVA
L2: 31.8 KVA

TOTAL CONNECTED LOAD= 62.1 KVA

PANEL DESIGNATION: L1A
VOLTAGE: 120/240V, 1Ø, 3W
AMPERES: 100A

LOCATION: PROCESS BUILDING
MAIN: MLO
PANEL MOUNTING: SURFACE

| LOAD SERVED | CONNECTED LOAD (KVA) L1 | L2 | CIRCUIT BREAKER AMPS | POLES | CKT NO. | CKT NO. | CIRCUIT BREAKER AMPS | POLES | CONNECTED LOAD (KVA) L1 | L2 | LOAD SERVED |
|---|---|---|---|---|---|---|---|---|---|---|---|
| LIGHTING | 0.6 | | 20 | 1 | 1 | 2 | 20 | 1 | 0.1 | | SCUM PUMPS CTRL PNL |
| LIGHTING | | 0.9 | 20 | 1 | 3 | 4 | 20 | 1 | | 0.7 | ALUM PUMP P715 |
| LIGHTING | 0.9 | | 20 | 1 | 5 | 6 | 20 | 1 | 0.7 | | ALUM PUMP P716 |
| LIGHTING | | 0.9 | 20 | 1 | 7 | 8 | 20 | 1 | | 0.7 | ALUM PUMP P717 |
| LIGHTING | 0.9 | | 20 | 1 | 9 | 10 | 20 | 1 | 0.7 | | ALUM PUMP P718 |
| LIGHTING | | 0.6 | 20 | 1 | 11 | 12 | 20 | 1 | | 0.2 | ALUM TANK LEVEL XMTRS |
| EXTERIOR LIGHT | | | 20 | 1 | 13 | 14 | 20 | 1 | 0.1 | | FIT701, FIT702 |
| SPARE | | | 20 | 1 | 15 | 16 | 20 | 1 | | 0.1 | FIT703, FIT704 |
| SPARE | | | 20 | 1 | 17 | 18 | 20 | 1 | 0.1 | | FIT705, FIT706 |
| RECEPTACLES | | 0.5 | 20 | 1 | 19 | 20 | 20 | 1 | | | SPARE |
| RECEPTACLES | 0.5 | | 20 | 1 | 21 | 22 | 20 | 1 | | | SPARE |
| RECEPTACLES | | 0.5 | 20 | 1 | 23 | 24 | 20 | 1 | | | SPARE |
| RECEPTACLES | 0.5 | | 20 | 1 | 25 | 26 | 20 | 1 | | | SPARE |
| RECEPTACLES | | 0.5 | 20 | 1 | 27 | 28 | 20 | 1 | | 0.9 | PIPE TUNNEL LIGHTS |
| RECEPTACLES | | | 20 | 1 | 29 | 30 | 20 | 1 | 0.9 | | PIPE TUNNEL LIGHTS |
| RECEPTACLES | | | 20 | 1 | 31 | 32 | 20 | 1 | | | SPARE |
| RECEPTACLES | | | 20 | 1 | 33 | 34 | 20 | 1 | | | SPARE |
| SPACE | | | | 2 | 35 | 36 | | 2 | | | SPACE |
| PIPE TUNNEL SUMP PUMPS | 0.6 | 0.6 | 20 | 2 | 37 | 38 | | 2 | | | SPACE |
| SUB-TOTAL | 4.0 | 4.5 | | | | | | | 2.6 | 2.6 | SUB-TOTAL |

L1: 6.6 KVA
L2: 7.1 KVA

TOTAL CONNECTED LOAD= 13.7 KVA

PANEL DESIGNATION: H2
VOLTAGE: 480V, 3Ø
AMPERES: 100A

LOCATION: GRIT REMOVAL UNIT
MAIN: MLO
PANEL MOUNTING: SURFACE

| LOAD SERVED | CONNECTED LOAD (KVA) A | B | C | CIRCUIT BREAKER AMPS | POLES | CKT NO. | CKT NO. | CIRCUIT BREAKER AMPS | POLES | CONNECTED LOAD (KVA) A | B | C | LOAD SERVED |
|---|---|---|---|---|---|---|---|---|---|---|---|---|---|
| PANEL L2 VIA 25KVA XFMR | 5.1 | 5.6 | | 70 | 2 | 1 | 2 | 20 | 3 | 0.8 | 0.8 | 0.8 | INFLUENT FLOW CONTROL VALVE |
| MAKE-UP AIR UNIT MU401 | 9.5 | 9.5 | 9.5 | 60 | 3 | 3 | 4 | 20 | 3 | 1.7 | 1.7 | 1.7 | UNIT HEATER UH401 |
| SPACE | | | | | | 5 | 6 | | | | | | SPACE |
| SUB-TOTAL | 15 | 15 | 10 | | | | | | | 3 | 3 | 3 | SUB-TOTAL |

L1: 18 KVA
L2: 18 KVA
L3: 13 KVA

TOTAL CONNECTED LOAD= 49 KVA

PANEL DESIGNATION: L2
VOLTAGE: 120/240V, 1Ø, 3W
AMPERES: 125A

LOCATION: GRIT REMOVAL UNIT
MAIN: 125/2 C/B
PANEL MOUNTING: SURFACE

| LOAD SERVED | CONNECTED LOAD (KVA) L1 | L2 | CIRCUIT BREAKER AMPS | POLES | CKT NO. | CKT NO. | CIRCUIT BREAKER AMPS | POLES | CONNECTED LOAD (KVA) L1 | L2 | LOAD SERVED |
|---|---|---|---|---|---|---|---|---|---|---|---|
| LIGHTING | 0.5 | | 20 | 1 | 1 | 2 | 20 | 1 | 0.5 | | GRIT PUMPS CTRL PANEL |
| LIGHTING | | 1.1 | 20 | 1 | 3 | 4 | 20 | 1 | | 0.1 | INFLUENT FLOWMETER |
| LIGHTING – PIT | 1.2 | | 20 | 1 | 5 | 6 | 20 | 1 | 0.2 | | VAULT LIGHTS |
| EXTERIOR LIGHTING | | 0.7 | 20 | 1 | 7 | 8 | 20 | 1 | | 0.6 | EXHAUST FAN EF401 |
| SPARE | | | 20 | 1 | 9 | 10 | 20 | 1 | 0.1 | | LIT501 |
| RECEPTACLES | | 0.5 | 20 | 1 | 11 | 12 | 20 | 1 | | | SPARE |
| RECEPTACLES | 0.5 | | 20 | 1 | 13 | 14 | 20 | 1 | | | SPARE |
| RECEPTACLES | | 0.5 | 20 | 1 | 15 | 16 | | 1 | | | SPACE |
| RECEPTACLES | 0.5 | | 20 | 1 | 17 | 18 | | 1 | | | |
| RECEPTACLES | | 0.5 | 20 | 1 | 19 | 20 | | 1 | | | |
| SPACE | | | | 1 | 21 | 22 | | 1 | | | |
| | | | | 1 | 23 | 24 | | 1 | | | |
| | | | | 1 | 25 | 26 | | 1 | | | |
| | | | | 1 | 27 | 28 | | 1 | | | |
| | | | | 1 | 29 | 30 | | 1 | | | |
| | | | | 1 | 31 | 32 | | 1 | | | |
| | | | | 1 | 33 | 34 | | 1 | | | |
| ROLL-UP DOOR | 0.8 | 0.8 | 20 | 2 | 35 | 36 | 30 | 2 | 0.8 | 0.8 | SUMP PUMPS CONTROL PANEL |
| SPACE | | | | 2 | 37 | 38 | | 2 | | | SPACE |
| SUB-TOTAL | 3.5 | 4.1 | | | | | | | 1.6 | 1.5 | SUB-TOTAL |

L1: 5.1 KVA
L2: 5.6 KVA

TOTAL CONNECTED LOAD= 10.7 KVA

PANEL DESIGNATION: H3
VOLTAGE: 480V, 3Ø
AMPERES: 100A

LOCATION: RAW SEWAGE PUMP STATION ELEC BLDG
MAIN: MLO
PANEL MOUNTING: SURFACE

| LOAD SERVED | CONNECTED LOAD (KVA) A | B | C | CIRCUIT BREAKER AMPS | POLES | CKT NO. | CKT NO. | CIRCUIT BREAKER AMPS | POLES | CONNECTED LOAD (KVA) A | B | C | LOAD SERVED |
|---|---|---|---|---|---|---|---|---|---|---|---|---|---|
| PANEL L3 VIA 25KVA XFMR | | 3.2 | 3.0 | 70 | 2 | 1 | 2 | 20 | 3 | 1.7 | 1.7 | 1.7 | UNIT HEATER UH1401 |
| SPACE | | | | | 3 | 3 | 4 | 40 | 3 | 6.7 | 6.7 | 6.7 | PUMP STATION UNIT HEATER |
| SPACE | | | | | 3 | 5 | 6 | | 3 | | | | SPACE |
| SUB-TOTAL | | 3 | 3 | | | | | | | 9 | 9 | 9 | SUB-TOTAL |

L1: 9 KVA
L2: 12 KVA
L3: 12 KVA

TOTAL CONNECTED LOAD= 33 KVA

GENERAL NOTES:

A. ALL CIRCUIT BREAKERS SERVING LIGHT FIXTURES TO BE UL LABELED FOR SWITCHING DUTY.

B. BRANCH CIRCUIT WIRE AND CONDUIT FROM PANELBOARDS SHALL BE SIZED IN ACCORDANCE WITH THE NEC. PROVIDE NUMBER OF CONDUCTORS REQUIRED FOR CIRCUIT BREAKER POLES. ALL BRANCH CIRCUIT CONDUITS TO CONTAIN AN INSULATED GROUND WIRE.

HDR
HDR Engineering, Inc. of North Carolina

| Issue No. | Description | Date | Drwn. | Chkd. | Resp. Engr. | Proj. Mgr. |
|---|---|---|---|---|---|---|
| R | RECORD DRAWING | 6/97 | | | | |
| 0 | ISSUED FOR CONSTRUCTION | 5/19/94 | | | | |
| B | ISSUED FOR BIDS | 1/10/94 | | | | |
| A | ISSUED FOR APPROVAL | 9/15/93 | | | | |

NORTH CAROLINA PROFESSIONAL SEAL 5340 ENGINEER RICHARD C. MILLS 1/10/94

Project Manager: R. HAMILTON
Architect: G. GENRICH
Civil: K. MOSTELLER
Electrical: R. MILLS
I&C/Process: R. HAMILTON
Mechanical: D. DeBOER
Structural: N. CABLE
Drawn By: D. PETERSON

City of Hickory
Henry Fork WWTP
Expansion and Upgrade
Contract C - Electrical
Hickory North Carolina

Panel Schedules

Date: NOV 1993
Scale: NO SCALE
Project No.: 00231-012-018
Sheet No.: 1416
Issue: R

P:\HICKOR~2\HF-1416

PANEL DESIGNATION: L3
VOLTAGE: 120/240V, 1Ø, 3W
AMPERES: 125A

LOCATION: RAW SEWAGE PUMP STATION ELEC BLDG
MAIN: 125/2 C/B
PANEL MOUNTING: SURFACE

| LOAD SERVED | CONNECTED LOAD (KVA) L1 | CONNECTED LOAD (KVA) L2 | CIRCUIT BREAKER AMPS | CIRCUIT BREAKER POLES | CKT NO. | CKT NO. | CIRCUIT BREAKER AMPS | CIRCUIT BREAKER POLES | CONNECTED LOAD (KVA) L1 | CONNECTED LOAD (KVA) L2 | LOAD SERVED |
|---|---|---|---|---|---|---|---|---|---|---|---|
| LIGHTING | 0.7 | | 20 | 1 | 1 | 2 | 20 | 1 | 0.4 | | CONTROL PANEL CP3 |
| LIGHTING | | 0.7 | 20 | 1 | 3 | 4 | 20 | 1 | | 0.9 | AIR COMPRESSOR |
| EXTERIOR LIGHTING | 0.6 | | 20 | 1 | 5 | 6 | 20 | 1 | 0.5 | | RECEPTACLES |
| SPARE | | | 20 | 1 | 7 | 8 | 20 | 1 | | 0.5 | RECEPTACLES |
| SPARE | | | 20 | 1 | 9 | 10 | 20 | 1 | 0.1 | | MOD1401 |
| SPARE | | | 20 | 1 | 11 | 12 | 20 | 1 | | | SPARE |
| SPACE | | | | 1 | 13 | 14 | | 1 | | | SPACE |
| ↓ | | | | 1 | 15 | 16 | | 1 | | | ↓ |
| | | | | 1 | 17 | 18 | | 1 | | | |
| | | | | 1 | 19 | 20 | | 1 | | | |
| SUMP PUMPS | 0.9 | 0.9 | 20 | 2 | 21 | 22 | | 2 | | | SPACE |
| SUB-TOTAL | 2.2 | 1.6 | | | | | | | 1.0 | 1.4 | SUB-TOTAL |

L1: 3.2 KVA
L2: 3.0 KVA

TOTAL CONNECTED LOAD= 6.0 KVA

PANEL DESIGNATION: H4
VOLTAGE: 480V, 3Ø
AMPERES: 100A

LOCATION: SLUDGE PUMP STATION
MAIN: MLO
PANEL MOUNTING: SURFACE

| LOAD SERVED | CONNECTED LOAD (KVA) A | CONNECTED LOAD (KVA) B | CONNECTED LOAD (KVA) C | CIRCUIT BREAKER AMPS | CIRCUIT BREAKER POLES | CKT NO. | CKT NO. | CIRCUIT BREAKER AMPS | CIRCUIT BREAKER POLES | CONNECTED LOAD (KVA) A | CONNECTED LOAD (KVA) B | CONNECTED LOAD (KVA) C | LOAD SERVED |
|---|---|---|---|---|---|---|---|---|---|---|---|---|---|
| PANEL L4 VIA 25KVA XFMR | 6.1 | | 5.8 | 70 | 2 | 1 | 2 | 70 | 3 | 14.0 | 14.0 | 14.0 | MAKE-UP AIR UNIT MU1001 |
| SPACE | | | | | 3 | 3 | 4 | | 3 | | | | SPARE |
| SPACE | | | | | 3 | 5 | 6 | | 3 | | | | SPACE |
| SUB-TOTAL | 6 | 0 | 6 | | | | | | | 14 | 14 | 14 | SUB-TOTAL |

L1: 20 KVA
L2: 14 KVA
L3: 20 KVA

TOTAL CONNECTED LOAD= 54 KVA

PANEL DESIGNATION: L4
VOLTAGE: 120/240V, 1Ø, 3W
AMPERES: 125A

LOCATION: SLUDGE PUMP STATION
MAIN: 125/2 C/B
PANEL MOUNTING: SURFACE

| LOAD SERVED | CONNECTED LOAD (KVA) L1 | CONNECTED LOAD (KVA) L2 | CIRCUIT BREAKER AMPS | CIRCUIT BREAKER POLES | CKT NO. | CKT NO. | CIRCUIT BREAKER AMPS | CIRCUIT BREAKER POLES | CONNECTED LOAD (KVA) L1 | CONNECTED LOAD (KVA) L2 | LOAD SERVED |
|---|---|---|---|---|---|---|---|---|---|---|---|
| SUMP PUMPS CONTROL PANEL | 1.1 | 1.1 | 20 | 2 | 1 | 2 | 20 | 2 | 0.4 | 0.4 | CONTROL PANEL CP4 |
| SPACE | | | | 2 | 3 | 4 | | 2 | | | SPACE |
| CANOPY LIGHTS | 0.9 | | 20 | 1 | 5 | 6 | 20 | 1 | 0.6 | | EF1001 |
| CANOPY LIGHTS | | 0.9 | 20 | 1 | 7 | 8 | 20 | 1 | | 0.6 | EF1002 |
| LIGHTING | 1.2 | | 20 | 1 | 9 | 10 | 20 | 1 | 0.5 | | RECEPTACLES |
| LIGHTING | | 1.2 | 20 | 1 | 11 | 12 | 20 | 1 | | 0.5 | RECEPTACLES |
| LIGHTING | 0.3 | | 20 | 1 | 13 | 14 | 20 | 1 | 0.5 | | RECEPTACLES |
| SPARE | | | 20 | 1 | 15 | 16 | 20 | 1 | | 0.5 | RECEPTACLES |
| AREA LUMINAIRE | 0.2 | | 20 | 1 | 17 | 18 | 20 | 1 | 0.5 | | RECEPTACLES |
| LUM. RECEPS. | | 0.5 | 20 | 1 | 19 | 20 | 20 | 1 | | | SPARE |
| SPACE | | | | 1 | 21 | 22 | 20 | 1 | 0.1 | | DECANT FLOWMETER |
| ↓ | | | | 1 | 23 | 24 | 20 | 1 | | 0.6 | FIT1001, V1034 |
| | | | | 1 | 25 | 26 | | 1 | | | SPACE |
| | | | | 1 | 27 | 28 | | 1 | | | ↓ |
| | | | | 1 | 29 | 30 | | 1 | | | |
| | | | | 1 | 31 | 32 | | 1 | | | |
| | | | | 1 | 33 | 34 | | 1 | | | |
| | | | | 1 | 35 | 36 | | 1 | | | |
| | | | | 1 | 37 | 38 | | 1 | | | |
| SUB-TOTAL | 3.5 | 3.2 | | | | | | | 2.6 | 2.6 | SUB-TOTAL |

L1: 6.1 KVA
L2: 5.8 KVA

TOTAL CONNECTED LOAD= 11.7 KVA

PANEL DESIGNATION: H5
VOLTAGE: 480V, 3Ø
AMPERES: 400A

LOCATION: CHLORINE BUILDING
MAIN: 400/3 C/B
PANEL MOUNTING: SURFACE

| LOAD SERVED | CONNECTED LOAD (KVA) A | CONNECTED LOAD (KVA) B | CONNECTED LOAD (KVA) C | CIRCUIT BREAKER AMPS | CIRCUIT BREAKER POLES | CKT NO. | CKT NO. | CIRCUIT BREAKER AMPS | CIRCUIT BREAKER POLES | CONNECTED LOAD (KVA) A | CONNECTED LOAD (KVA) B | CONNECTED LOAD (KVA) C | LOAD SERVED |
|---|---|---|---|---|---|---|---|---|---|---|---|---|---|
| PANEL L5 VIA 25KVA XFMR | 9.3 | | 9.3 | 70 | 2 | 1 | 2 | 50 | 3 | 4.0 | 4.0 | 4.0 | PLANT WATER PUMP STARTERS |
| NORTH $CL_2$ TANK CHLORINE INDUCTOR | 2.0 | 2.0 | 2.0 | 20 | 3 | 3 | 4 | 20 | 3 | 2.0 | 2.0 | 2.0 | SOUTH $CL_2$ TANK CHLORINE INDUCTOR |
| NORTH $CL_2$ TANK $SO_2$ INDUCTOR | 2.0 | 2.0 | 2.0 | 20 | 3 | 5 | 6 | 20 | 3 | 2.0 | 2.0 | 2.0 | SOUTH $CL_2$ TANK $SO_2$ INDUCTOR |
| MAKE-UP AIR UNIT MU901 | 34 | 34 | 34 | 175 | 3 | 7 | 8 | 150 | 3 | 27 | 27 | 27 | MAKE-UP AIR UNIT MU902 |
| EF901 AND EF902 MOTOR STARTERS | 2.0 | 2.0 | 2.0 | 20 | 3 | 9 | 10 | 20 | 3 | 0.8 | 0.8 | 0.8 | MONORAIL HOIST |
| UH901 UH902 | 3.4 | 3.4 | 3.4 | 30 | 3 | 11 | 12 | 30 | 3 | 5.1 | 5.1 | 5.1 | UH903 UH904 UH905 |
| SPACE | | | | | 3 | 13 | 14 | | 3 | | | | SPACE |
| SUB-TOTAL | 53 | 44 | 53 | | | | | | | 41 | 41 | 41 | SUB-TOTAL |

L1: 94 KVA
L2: 85 KVA
L3: 94 KVA

TOTAL CONNECTED LOAD= 273 KVA

PANEL DESIGNATION: L5
VOLTAGE: 120/240V, 1Ø, 3W
AMPERES: 125A

LOCATION: CHLORINE BUILDING
MAIN: 125/2 C/B
PANEL MOUNTING: SURFACE

| LOAD SERVED | CONNECTED LOAD (KVA) L1 | CONNECTED LOAD (KVA) L2 | CIRCUIT BREAKER AMPS | CIRCUIT BREAKER POLES | CKT NO. | CKT NO. | CIRCUIT BREAKER AMPS | CIRCUIT BREAKER POLES | CONNECTED LOAD (KVA) L1 | CONNECTED LOAD (KVA) L2 | LOAD SERVED |
|---|---|---|---|---|---|---|---|---|---|---|---|
| SPACE | | | | 2 | 1 | 2 | 20 | 2 | 0.6 | 0.6 | SAMPLE PUMP P901 |
| SPACE | | | | 2 | 3 | 4 | 20 | 2 | 0.6 | 0.6 | SAMPLE PUMP P902 |
| LIGHTING | 1.2 | | 20 | 1 | 5 | 6 | 20 | 1 | 0.5 | | TANK CTRL PANEL |
| LIGHTING | | 0.9 | 20 | 1 | 7 | 8 | 20 | 1 | | 0.1 | FIT901 |
| LIGHTING | 0.6 | | 20 | 1 | 9 | 10 | 20 | 1 | 0.1 | | FIT902 |
| LIGHTING | | 0.4 | 20 | 1 | 11 | 12 | 20 | 1 | | 0.6 | CLF905 |
| LIGHTING | 0.6 | | 20 | 1 | 13 | 14 | 20 | 1 | | | SPARE |
| LIGHTING | | 1.7 | 20 | 1 | 15 | 16 | 20 | 1 | | 0.1 | $CL_2$ LEAK DETECTORS |
| EXTERIOR LIGHTING | 0.6 | | 20 | 1 | 17 | 18 | 20 | 1 | 0.1 | | $SO_2$ LEAK DETECTORS |
| SPARE | | | 20 | 1 | 19 | 20 | 20 | 1 | | 0.4 | CLF901,902, RCA901 |
| RECEPTACLES | 0.5 | | 20 | 1 | 21 | 22 | 20 | 1 | 0.4 | | CLF903,904, RCA902 |
| | | 0.5 | 20 | 1 | 23 | 24 | 20 | 1 | | 0.4 | SDF901,902 |
| | 0.5 | | 20 | 1 | 25 | 26 | 20 | 1 | 0.4 | | SDF903,904 |
| | | 0.5 | 20 | 1 | 27 | 28 | 20 | 1 | | 0.2 | CHLORINE HEATER |
| | 0.5 | | 20 | 1 | 29 | 30 | 20 | 1 | 0.2 | | $SO_2$ HEATER |
| | | 0.5 | 20 | 1 | 31 | 32 | 20 | 1 | | 0.5 | EF903 |
| AIR COMP. NO. 1 | 1.2 | | 20 | 1 | 33 | 34 | 20 | 1 | 0.1 | | $CL_2$ SCALE |
| AIR COMP. NO. 2 | | 1.2 | 20 | 1 | 35 | 36 | 20 | 1 | | 0.1 | $SO_2$ SCALE |
| AIR COMP. NO. 3 | 0.5 | | 20 | 1 | 37 | 38 | 20 | 1 | 0.1 | | MOD901 |
| SUB-TOTAL | 6.2 | 5.7 | | | | | | | 3.1 | 3.6 | SUB-TOTAL |

L1: 9.3 KVA
L2: 9.3 KVA

TOTAL CONNECTED LOAD= 18.6 KVA

PANEL DESIGNATION: L1B
VOLTAGE: 120/240V, 1Ø, 3W
AMPERES: 100A

LOCATION: PROCESS BUILDING
MAIN: MLO
PANEL MOUNTING: SURFACE

| LOAD SERVED | CONNECTED LOAD (KVA) L1 | CONNECTED LOAD (KVA) L2 | CIRCUIT BREAKER AMPS | CIRCUIT BREAKER POLES | CKT NO. | CKT NO. | CIRCUIT BREAKER AMPS | CIRCUIT BREAKER POLES | CONNECTED LOAD (KVA) L1 | CONNECTED LOAD (KVA) L2 | LOAD SERVED |
|---|---|---|---|---|---|---|---|---|---|---|---|
| CONTROL PANEL CP1 | 0.1 | | 20 | 1 | 1 | 2 | 20 | 1 | 0.2 | | BLOWER NO.1 CNTL. PNL. |
| VALVE V795 | | 0.4 | 20 | 1 | 3 | 4 | 20 | 1 | | 0.2 | BLOWER NO.2 CNTL. PNL. |
| VALVE V796 | 0.4 | | 20 | 1 | 5 | 6 | 20 | 1 | 0.2 | | BLOWER NO.3 CNTL. PNL. |
| VALVE V780 | | 0.4 | 20 | 1 | 7 | 8 | 20 | 1 | | | SPARE |
| SPARE | | | 20 | 1 | 9 | 10 | | 1 | 0.2 | | CLARIFIER NO.1 LUMINAIRE |
| SPARE | | | 20 | 1 | 11 | 12 | | 1 | | 0.5 | CLARIFIER NO.1 RECEPT. |
| SPARE | | | 20 | 1 | 13 | 14 | | 1 | 0.2 | | CLARIFIER NO.2 LUMINAIRE |
| SPARE | | | 20 | 1 | 15 | 16 | | 1 | | 0.5 | CLARIFIER NO.2 RECEPT. |
| SPACE | | | | 1 | 17 | 18 | | 1 | | | SPACE |
| ↓ | | | | 1 | 19 | 20 | | 1 | | | ↓ |
| | | | | 1 | 21 | 22 | | 1 | | | |
| | | | | 1 | 23 | 24 | | 1 | | | |
| | | | | 1 | 25 | 26 | | 1 | | | |
| | | | | 1 | 27 | 28 | | 1 | | | |
| | | | | 1 | 29 | 30 | | 1 | | | |
| | | | | 1 | 31 | 32 | | 1 | | | |
| | | | | 1 | 33 | 34 | | 1 | | | |
| ROLLING DOOR OPERATOR | 0.5 | 0.5 | 20 | 2 | 35 | 36 | 60 | 2 | | | GENSET PANEL |
| SPACE | | | | 2 | 37 | 38 | | 2 | | | SPACE |
| SUB-TOTAL | 1.0 | 1.3 | | | | | | | 0.8 | 1.2 | SUB-TOTAL |

L1: 1.8 KVA
L2: 2.5 KVA

TOTAL CONNECTED LOAD= 4.3 KVA

GENERAL NOTES:

A. ALL CIRCUIT BREAKERS SERVING LIGHT FIXTURES TO BE UL LABELED FOR SWITCHING DUTY.

B. BRANCH CIRCUIT WIRE AND CONDUIT FROM PANELBOARDS SHALL BE SIZED IN ACCORDANCE WITH THE NEC. PROVIDE NUMBER OF CONDUCTORS REQUIRED FOR CIRCUIT BREAKER POLES. ALL BRANCH CIRCUIT CONDUITS TO CONTAIN AN INSULATED GROUND WIRE.

HDR
HDR Engineering, Inc. of North Carolina

| Issue No. | Description | Date | Drwn. | Chkd. | Resp. Engr. | Proj. Mgr. |
|---|---|---|---|---|---|---|
| R | RECORD DRAWING | 6/97 | | | | |
| 0 | ISSUED FOR CONSTRUCTION | 5/19/94 | | | | |
| B | ISSUED FOR BIDS | 1/10/94 | | | | |
| A | ISSUED FOR APPROVAL | 6/15/93 | | | | |

NORTH CAROLINA PROFESSIONAL SEAL 5340 ENGINEER RICHARD C. MILLS
1/10/94

Project Manager: R. HAMILTON
Architect: G. GENRICH
I&C/Process: R. HAMILTON
Civil: K. MOSTELLER
Mechanical: D. DeBOER
Electrical: R. MILLS
Structural: N. CABLE
Drawn By: D. PETERSON

Hickory

# City of Hickory
## Henry Fork WWTP
## Expansion and Upgrade
## Contract C - Electrical

North Carolina

# Panel Schedules

Date: NOV 1993
Scale: NO SCALE
Project No.: 00231-012-018
Sheet No.: 1417
Issue: R

P:\HICKORY2\HF-1417

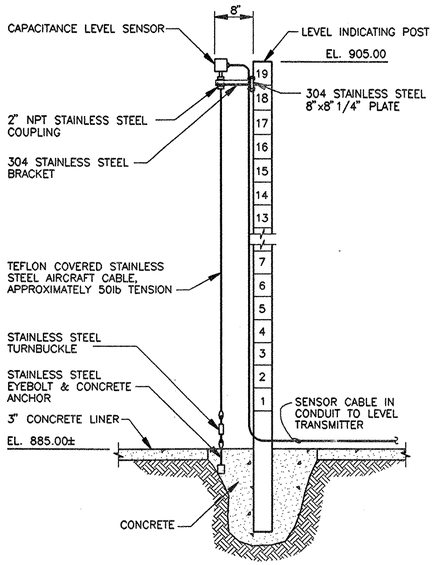


## EQUALIZATION BASIN LEVEL SENSOR POST DETAIL

1 / 1404

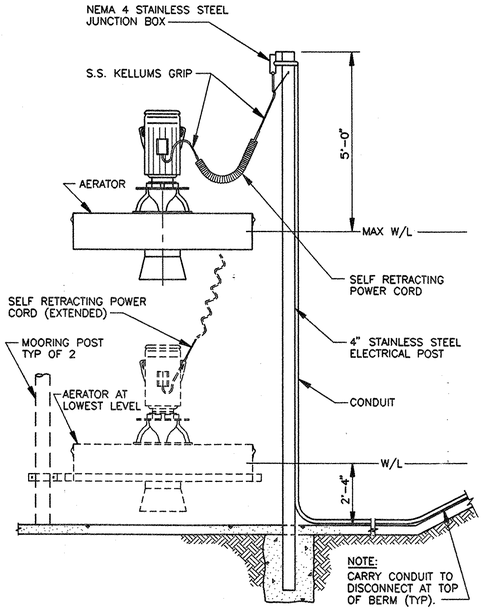


## AERATOR WIRING DETAIL

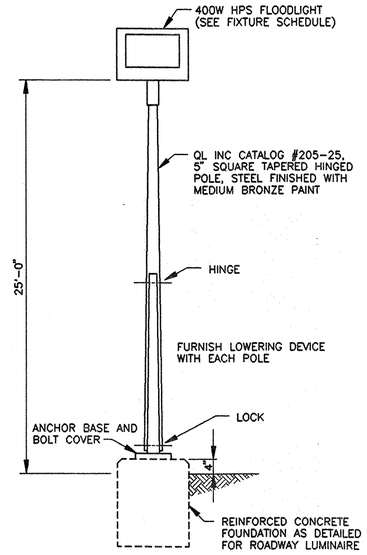


## FLOODLIGHT DETAIL

TYPE F1 – ONE FLOODLIGHT
TYPE F2 – TWO FLOODLIGHTS

## LIGHTING FIXTURE SCHEDULE

| NO | DESCRIPTION | LAMPS | MOUNTING | MANUFACTURER & MODEL No. |
|---|---|---|---|---|
| A | FLUORESCENT WRAPAROUND, ACRYLIC DIFFUSER | 2–F40CW | CEILING SURFACE | LITHONIA VC240A–120 |
| B1 | HID WALL BRACKET, PHOTOCELL CONTROLLED | 1–250W HPS | WALL | LITHONIA TWH250S–120–CRT–PE |
| B2 | HID WALL BRACKET, PHOTOCELL CONTROLLED | 1–400W HPS | WALL | LITHONIA TWH400S–120–CRT–PE |
| C | HID LOW BAY, QUARTZ RESTRIKE, LOW AMBIENT | 1–250W HPS | PENDANT | LITHONIA TX250SA26–120–QRS–HA–CRT–SSS–SLR–WL |
| D | WALL MOUNTED FLUORESCENT, ACRYLIC DIFFUSER | 2–F40CW | WALL | LITHONIA WC240 |
| E | EXIT LIGHT | | ABOVE DOOR | LITHONIA EP–IRW–120 |
| F1 | FLOODLIGHT, SINGLE | 1–400W HPS | SEE DETAIL | LITHONIA TFH400SRM2–480–70F–CRT–PWB |
| F2 | FLOODLIGHT, DOUBLE | 1–400W HPS/FIXTURE | SEE DETAIL | LITHONIA TFH400SRM2–480–70F–CRT–PWB |
| G | ENCLOSED AND GASKETED FLUORESCENT, NON–METALLIC HOUSING | 2–F40CW | SURFACE, OR PENDANT | LITHONIA DM240 |
| H | CLASS I, DIVISION 2 INCANDESCENT | 1–300W | TO SURFACE MOUNTED BOX | CROUSE–HINDS EVCX2051 |
| J | 8 FT INDUSTRIAL FLUORESCENT | 2–F96HO | CEILING SURFACE | LITHONIA AF22HO–PO–120 |
| L | AREA LUMINAIRE | 1–400W HPS/FIXTURE | SEE DETAIL | LITHONIA KAS2400SR2–480–DMB |
| M | ROADWAY LUMINAIRE | 1–400W HPS | SEE DETAIL | LITHONIA KAS2400SR4–480–PE–DMB |
| N | CLASS 1, DIVISION 2 INCANDESCENT | 1–100W | WALL | CROUSE–HINDS VXHBF15GP |
| P | AREA LUMINAIRE | 1–150W HPS | SEE DETAIL | SEE DETAIL |

C / AD-1

## CONTROL STATION SCHEDULE

| TAG | USED FOR | FUNCTION | NUMBER OF COMPONENTS | | | | | | ENCLOSURE |
|---|---|---|---|---|---|---|---|---|---|
| | | | PILOT LIGHTS | HOA SWITCH | ON/OFF SWITCH | START PUSHBUTTON | STOP PUSHBUTTON | | |
| CS1 | RAW SEWAGE PUMP P301 | LOCAL LOCK–OUT | 2 | | 1 | | | | NEMA 4X SST |
| CS2 | RAW SEWAGE PUMP P302 | LOCAL LOCK–OUT | 2 | | 1 | | | | NEMA 4X SST |
| CS3 | RAW SEWAGE PUMP P303 | LOCAL LOCK–OUT | 2 | | 1 | | | | NEMA 4X SST |
| CS4 | RAW SEWAGE PUMP P304 | LOCAL LOCK–OUT | 2 | | 1 | | | | NEMA 4X SST |
| CS5 | GRIT PUMP P401 | LOCAL LOCK–OUT | 1 | | 1 | | | | NEMA 4X SST |
| CS6 | GRIT PUMP P402 | LOCAL LOCK–OUT | 1 | | 1 | | | | NEMA 4X SST |
| CS7 | GRIT WASHER | HAND/OFF/AUTO SELECT | 1 | 1 | | | | | NEMA 4X SST |
| CS8 | EQUALIZATION BASIN AERATOR FSA501 | HAND/OFF/AUTO SELECT | 1 | 1 | | | | | NEMA 4X SST |
| CS9 | EQUALIZATION BASIN AERATOR FSA502 | HAND/OFF/AUTO SELECT | 1 | 1 | | | | | NEMA 4X SST |
| CS10 | EQUALIZATION BASIN AERATOR FSA503 | HAND/OFF/AUTO SELECT | 1 | 1 | | | | | NEMA 4X SST |
| CS11 | EQUALIZATION BASIN AERATOR FSA504 | HAND/OFF/AUTO SELECT | 1 | 1 | | | | | NEMA 4X SST |
| CS12 | EQUALIZATION BASIN AERATOR FSA505 | HAND/OFF/AUTO SELECT | 1 | 1 | | | | | NEMA 4X SST |
| CS13 | EQUALIZATION BASIN AERATOR FSA506 | HAND/OFF/AUTO SELECT | 1 | 1 | | | | | NEMA 4X SST |
| CS14 | TRUCKED SLUDGE PUMP | ON/OFF CONTROL | | | 1 | | 1 | | NEMA 4X SST |
| CS15 | MIXER MX1001 | HAND/OFF/AUTO SELECT | | 1 | | | | | NEMA 4X SST |
| CS16 | MIXER MX1002 | HAND/OFF/AUTO SELECT | | 1 | | | | | NEMA 4X SST |
| CS17 | AERATION BASIN MIXER ABM601 | ON/OFF CONTROL | | | 1 | | | | NEMA 4X SST |
| CS18 | AERATION BASIN MIXER ABM602 | ON/OFF CONTROL | | | 1 | | | | NEMA 4X SST |
| CS19 | AERATION BASIN MIXER ABM603 | ON/OFF CONTROL | | | 1 | | | | NEMA 4X SST |
| CS20 | AERATION BASIN MIXER ABM604 | ON/OFF CONTROL | | | 1 | | | | NEMA 4X SST |
| CS21 | AERATION BASIN MIXER ABM605 | ON/OFF CONTROL | | | 1 | | | | NEMA 4X SST |
| CS22 | AERATION BASIN MIXER ABM606 | ON/OFF CONTROL | | | 1 | | | | NEMA 4X SST |
| CS23 | AERATION BASIN MIXER ABM607 | ON/OFF CONTROL | | | 1 | | | | NEMA 4X SST |
| CS24 | AERATION BASIN MIXER ABM608 | ON/OFF CONTROL | | | 1 | | | | NEMA 4X SST |
| CS25 | AERATION BASIN MIXER ABM609 | ON/OFF CONTROL | | | 1 | | | | NEMA 4X SST |
| CS26 | AERATION BASIN MIXER ABM610 | ON/OFF CONTROL | | | 1 | | | | NEMA 4X SST |
| CS27 | AERATION BASIN MIXER ABM611 | ON/OFF CONTROL | | | 1 | | | | NEMA 4X SST |
| CS28 | AERATION BASIN MIXER ABM612 | ON/OFF CONTROL | | | 1 | | | | NEMA 4X SST |
| CS29 | BASIN DRAIN PUMP P601 | ON/OFF CONTROL | | | 1 | | | | NEMA 4X SST |
| CS30 | BASIN DRAIN PUMP P602 | ON/OFF CONTROL | | | 1 | | | | NEMA 4X SST |
| CS31 | SPLITTER BOX MIXER SBM613 | ON/OFF CONTROL | | | 1 | | | | NEMA 4X SST |
| CS32 | SPLITTER BOX MIXER SBM614 | ON/OFF CONTROL | | | 1 | | | | NEMA 4X SST |

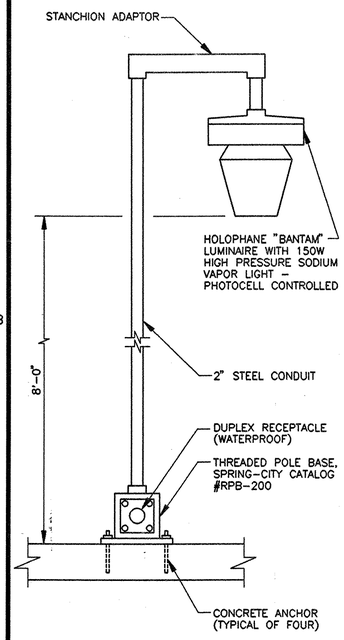


## AREA LUMINAIRE DETAIL

TYPE P

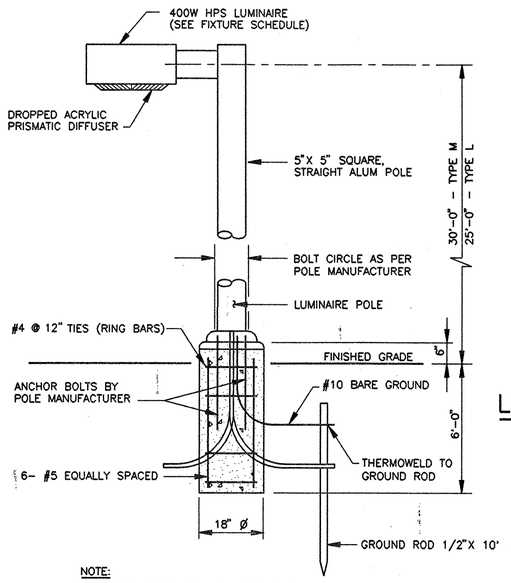


NOTE:
FINISH CONCRETE TOP FOR SEATING OF POLE WITHOUT SHIMS. APPLY HEAVY COATING OF ALLUMINASTIC COMPOUND, CONSISTENCY "K" TO BASE OF POLE AND ANCHOR BOLTS WHICH COME IN CONTACT WITH CONCRETE. 2" BEVEL ON CONCRETE TOP.

## ROADWAY LUMINAIRE DETAIL

TYPE M – SINGLE LUMINAIRE
TYPE L – TWO LUMINAIRES

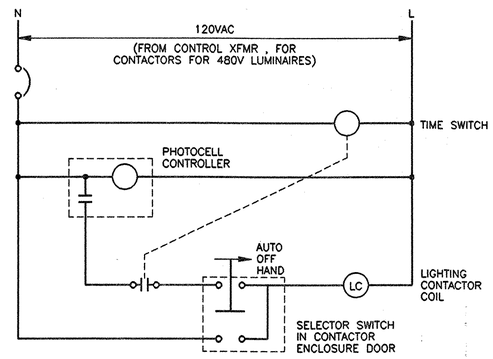


## LIGHTING CONTACTOR CONTROL WIRING

HDR

HDR Engineering, Inc. of North Carolina

| Issue No. | Description | Date | Drwn. | Chkd. | Resp. Engr. | Proj. Mgr. |
|---|---|---|---|---|---|---|
| R | RECORD DRAWING | 6/97 | | | | |
| 0 | ISSUE FOR CONSTRUCTION | 5/19/94 | | | | |
| C | CONFORM TO ADDENDA NO 1 | 2/7/94 | | | | |
| B | ISSUED FOR BIDS | 1/10/94 | | | | |
| A | ISSUED FOR APPROVAL | 6/15/93 | | | | |

NORTH CAROLINA PROFESSIONAL SEAL 8200 ENGINEER RICHARD D. HAMILTON

| | |
|---|---|
| Project Manager | R. HAMILTON |
| Architect | G. GENRICH |
| I&C/Process | R. HAMILTON |
| Civil | K. MOSTELLER |
| Mechanical | D. DeBOER |
| Electrical | R. MILLS |
| Structural | N. CABLE |
| Drawn By | D. PETERSON |

# City of Hickory
## Henry Fork WWTP Expansion and Upgrade
## Contract C - Electrical

Hickory North Carolina

## Electrical Details

| Date | Project No. | Sheet No. | Issue |
|---|---|---|---|
| NOV 1993 | 00231-012-018 | 1418 | R |

Scale: NO SCALE

P:\HICKORY2\HF-1418

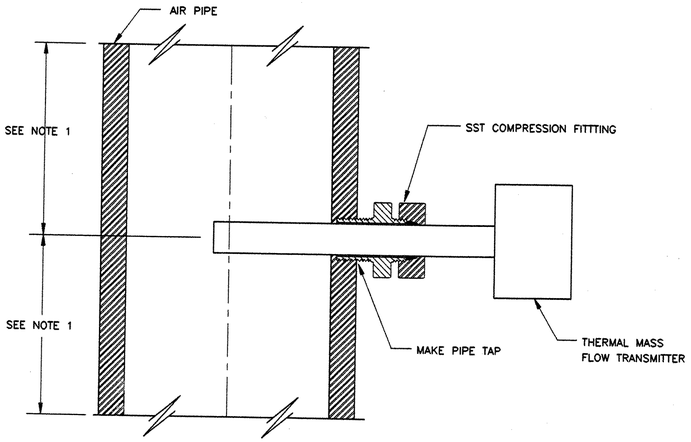


NOTE:

1. LOCATE TRANSMITTER IN ACCORDANCE WITH MANUFACTURERS RECOMMENDATIONS FOR UPSTREAM AND DOWNSTREAM STRAIGHT PIPE LENGTHS.

## AIR FLOW TRANSMITTER DETAIL

NO SCALE

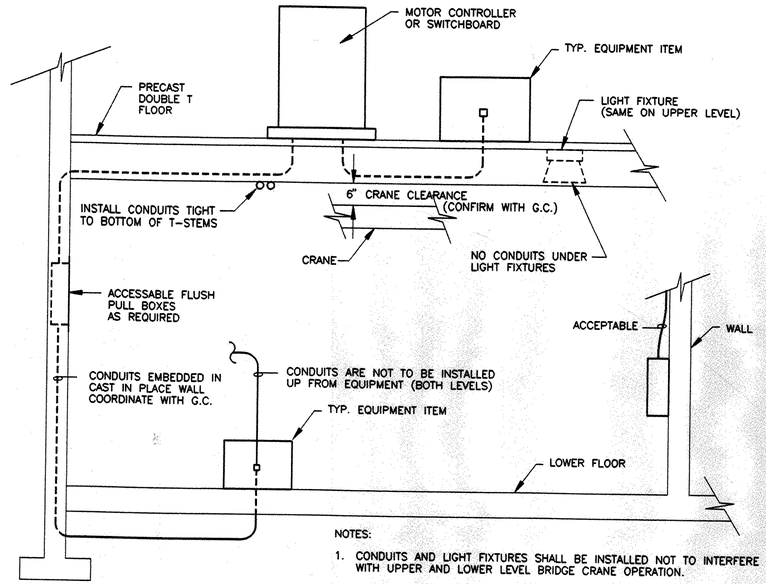


NOTES:

1. CONDUITS AND LIGHT FIXTURES SHALL BE INSTALLED NOT TO INTERFERE WITH UPPER AND LOWER LEVEL BRIDGE CRANE OPERATION.
2. SEE G.C. STRUCTURAL DWGS FOR CRANE CORBELS.
3. NO CONDUITS SHALL BE RUN EXPOSED ON FLOOR SURFACE ANYWHERE ON PROJECT.
4. CONDUITS ARE NOT TO BE EXTENDED UP FROM EQUIPMENT AND RUN EXPOSED TO WALLS OR CEILING.

## PROCESS BUILDING CONDUIT INSTALLATION DETAIL

## CONTROL PANEL SCHEDULE (SEE NOTE 1)

| CONTROL PANEL FOR | FURNISHED BY | SET IN PLACE BY | PROVISION OF WIRE AND CONDUIT (SEE NOTE 12) | | NOTES | BUBBLER LINES BY | PROVISION OF FLOAT SWITCHES BY |
|---|---|---|---|---|---|---|---|
| | | | TO EQUIPMENT ITEMS BY | AS SHOWN ON ELEC. DWGS BY | | | |
| BLOWER NO. 1 | G.C. | G.C. | G.C. | E.C. | 2 | | |
| BLOWER NO. 2 | G.C. | G.C. | G.C. | E.C. | 2 | | |
| BLOWER NO. 3 | G.C. | G.C. | G.C. | E.C. | 2 | | |
| DISSOLVED OXYGEN-CP1 | E.C | E.C | E.C. | E.C. | 3 | | |
| GRIT PUMPS-CP2 | E.C | E.C | E.C. | E.C. | 3 | | |
| RAW SEWAGE PUMPS-CP3 | E.C | E.C | E.C. | E.C. | 3 | E.C. | |
| DECANT-CP4 | E.C | E.C | E.C. | E.C. | 3 | E.C. | |
| HYDROPNEUMATIC-CP5 | E.C | E.C | E.C. | E.C. | 3 | | |
| SCUM PUMPS-CP6 | E.C | E.C | E.C. | E.C. | 3 | | E.C. |
| EXIST. BAR SCREEN | | | | E.C. | 4 | | |
| BAR SCREEN | G.C. | E.C. | G.C. | E.C. | 5 | G.C. | G.C. |
| GRIT REMOVAL UNIT | G.C. | E.C. | G.C. | E.C. | 6 | | |
| RAW SEWAGE PUMP STA. SUMP PUMPS | G.C. | E.C. | E.C. | E.C. | 7 | | G.C. |
| GRIT UNIT SUMP PUMPS | G.C. | E.C. | E.C. | E.C. | 7 | | G.C. |
| PROCESS BUILDING SUMP PUMPS | G.C | E.C | E.C | E.C. | 7 | | G.C. |
| SLUDGE PUMP STA. SUMP PUMPS | G.C. | E.C. | E.C. | E.C. | 7 | | G.C. |
| AERATION BASIN VALVE PIT SUMP PUMPS | G.C. | E.C. | E.C. | E.C. | 7 | | G.C. |
| SCR DRIVES FOR CHEM. PUMPS (4) | G.C. | E.C. | E.C. | E.C. | 8 | | |
| CLARIFIERS (2 PANELS) | G.C. | G.C. | G.C. | E.C. | 9 | | |
| CLARIFIER WEIR (2 PANELS) | G.C. | G.C. | G.C. | E.C. | 9 | | |
| DOOR OPERATOR | G.C. | G.C. | E.C. | E.C. | | | |
| CL2 INDUCTORS (2) | G.C. | E.C. | E.C. | E.C. | | | |
| SO2 INDUCTORS (2) | G.C. | E.C. | E.C. | E.C. | | | |
| CHLORINATORS | G.C. | E.C. | E.C. | E.C. | | | |
| SULFONATORS | G.C. | E.C. | E.C. | E.C. | | | |
| POLYMER SYSTEM | G.C. | G.C. | G.C. | E.C. | | | |
| BRIDGE CRANES, HOISTS | G.C. | G.C. | G.C. | E.C. | 11 | | |
| SONIC FLOWMETER TRANSMITTERS | G.C. | G.C. | G.C. | E.C. | 13 | | |
| VALVE CONTROL STATIONS | G.C. | E.C. | E.C. | E.C. | 14 | | |
| MOTOR OPERATED VALVES | G.C. | G.C. | E.C. | E.C. | | | |

RESPONSIBLE CONTRACTOR DESIGNATION

E.C. - ELECTRICAL CONTRACTOR
G.C. - GENERAL CONTRACTOR

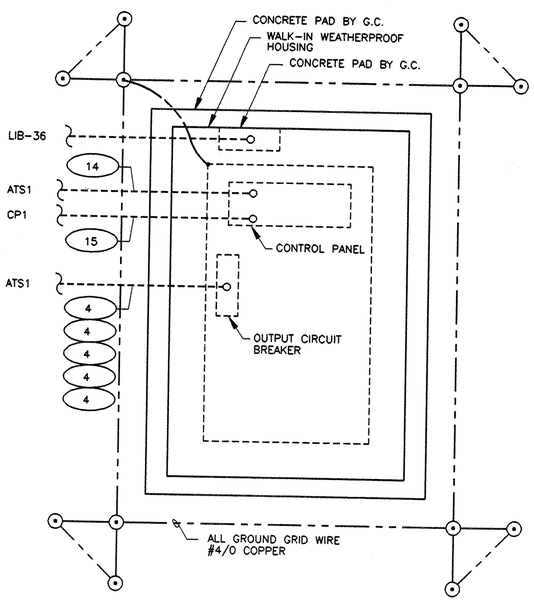


## DIESEL ENGINE GENERATOR SET DETAIL

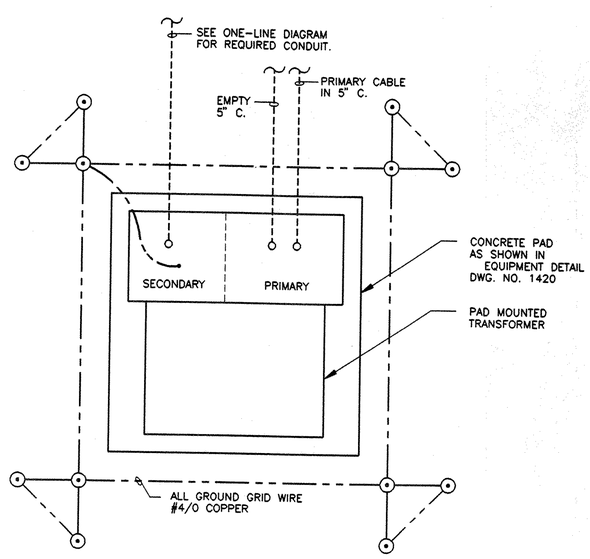


NOTE: TRANSFORMER CONNECTED GROUNDED WYE / GROUNDED WYE

## PAD MOUNTED TRANSFORMER DETAIL (TYP. FOR 2 TRANSFORMERS)

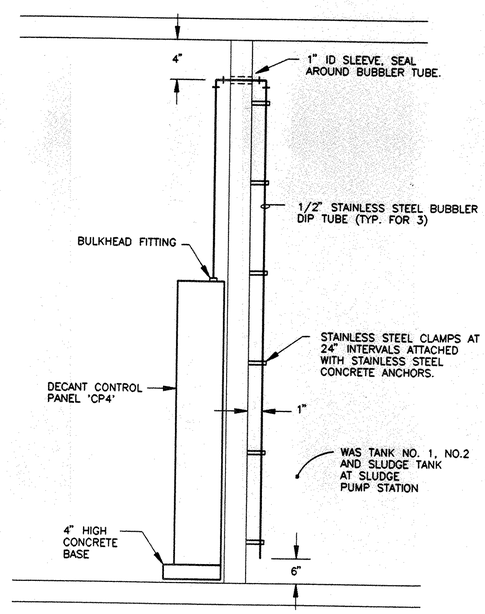


## BUBBLER LINE DETAIL

NOTES: (CONTROL PANEL SCHEDULE ONLY)

1. THE CONTRACTOR SHALL FURNISH AND INSTALL CONTROL PANELS AND ASSOCIATED WIRING AS SHOWN IN THE CONTROL PANEL SCHEDULE.
2. PROVISION OF CONDUIT AND WIRE TO EQUIPMENT ITEMS INCLUDE ALL EQUIPMENT ON THE BLOWER SUCH AS VIBRATION SENSORS.
3. CONTROL PANELS CP1, CP2, CP3, CP4, CP5 AND CP6 SHALL BE PROVIDED COMPLETE BY THE ELECTRICAL CONTRACTOR. SEE DETAILS ON DRAWINGS.
4. PROVIDE NEW POWER FEEDER TO THE EXISTING BAR SCREEN CONTROL PANEL. SEE I/O SUMMARY FOR RTU3 FOR ADDITIONAL INPUTS TO PLC SYSTEM.
5. PROVISION OF CONDUIT AND WIRE TO EQUIPMENT ITEMS INCLUDES ALL EQUIPMENT ON THE BAR SCREEN SUCH AS LIMIT SWITCHES, LEVEL SENSORS, AND THE SCREEN MOTOR.
6. PROVISION OF CONDUIT AND WIRE TO EQUIPMENT ITEMS INCLUDES ALL EQUIPMENT ON THE GRIT REMOVAL UNIT SUCH AS LEVEL SENSORS, SOLENOID VALVES, AND THE DRIVE MOTOR.
7. E.C. TO FURNISH AND INSTALL CONDUIT FOR FLOAT SWITCH AND MOTOR CABLES. EXTEND CONDUITS FROM CONTROL PANEL DOWN INTO SUMP AND PULL IN FLOAT AND MOTOR CABLES. E.C. TO PROVIDE CONNECTION IN CONTROL PANEL. G.C. TO INSTALL FLOAT SWITCHES.
8. E.C. TO OBTAIN SCR EXTERNAL WIRING DIAGRAMS FROM G.C.. E.C. TO PROVIDE ALL WIRING REQUIRED BY THESE DIAGRAMS.
9. PROVISION OF CONDUIT AND WIRE TO EQUIPMENT ITEMS INCLUDES CLARIFIER EQUIPMENT SUCH AS TORQUE OVERLOAD SWITCHES, WEIR CONTROLS, AND MOTORS.
10. EXTEND CONDUIT AND WIRE TO DOOR OPERATOR INSTALLED LOCATION. LOCATION ON DWG. FOR REFERENCE ONLY. OBTAIN DOOR OPERATOR WIRING DIAGRAMS FROM G.C. AND PROVIDE WIRING AS REQUIRED BY THESE DRAWINGS. MOUNT AND CONNECT ALL OPERATOR CONTROL STATIONS
11. EXTEND CONDUIT AND WIRE TO BRIDGE CRANE INSTALLED LOCATIONS. CRANE JB'S ARE LOCATED ON DRAWINGS FOR REFERENCE ONLY.
12. INCLUDES CONNECTIONS.
13. G.C. TO PROVIDE SENSOR CABLE IN CONDUIT FROM SENSORS TO TRANSMITTERS. E.C. TO PROVIDE POWER AND SIGNAL WIRING TO TRANSMITTER. G.C. TO MAKE ALL CONNECTIONS INSIDE TRANSMITTER.
14. E.C. TO MOUNT AND WIRE CONTROL STATIONS FOR RAS AND WAS VALVES (4).

HDR

HDR Engineering, Inc. of North Carolina

| Issue No. | Description | Date | Drwn. | Chkd. | Resp. Engr. | Proj. Mgr. |
|---|---|---|---|---|---|---|
| R | RECORD DRAWING | 6/97 | | | | |
| 0 | ISSUED FOR CONSTRUCTION | 5/19/94 | | | | |
| B | ISSUED FOR BIDS | 1/10/94 | | | | |
| A | ISSUED FOR APPROVAL | 6/15/93 | | | | |

NORTH CAROLINA PROFESSIONAL SEAL 5340 ENGINEER RICHARD C. MILLS 1/10/94

Project Manager: R. HAMILTON
Architect: G. GENRICH
Civil: K. MOSTELLER
Electrical: R. MILLS
I&C/Process: R. HAMILTON
Mechanical: D. DeBOER
Structural: N. CABLE
Drawn By: D. PETERSON

City of Hickory
Henry Fork WWTP
Expansion and Upgrade
Contract C - Electrical

Hickory North Carolina

Electrical Standard Details

Date: NOV 1993
Scale: NO SCALE
Project No.: 00231-012-018
Sheet No.: 1419
Issue: R

P:\HICKORY2\HF-1419

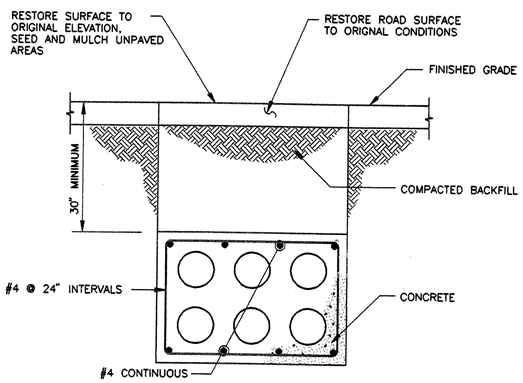


## DUCT BANK TRENCH AND REINFORCING DETAIL

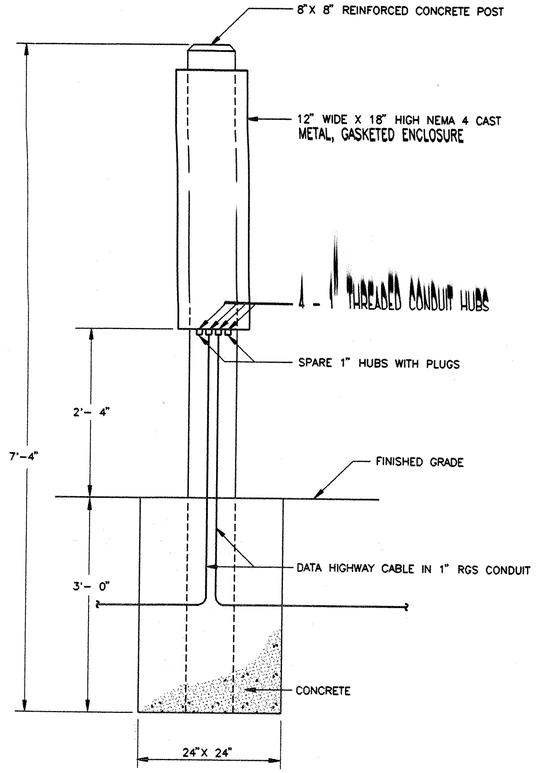


## DATA HIGHWAY PULL BOX DETAIL

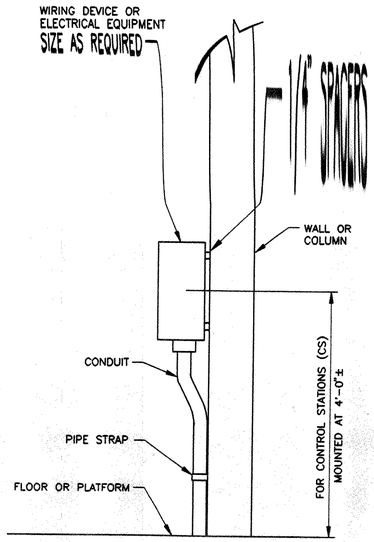


NOTE:
ALL MOUNTING HARDWARE SHALL BE STAINLESS STEEL.

## WALL OR COLUMN MOUNTED DEVICE DETAIL

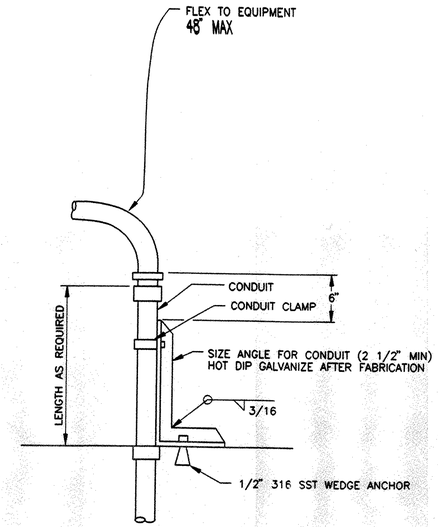


NOTE:
PROVIDE THE SUPPORT SHOWN IN THIS DETAIL WHEREVER RIGID CONDUIT RISES THRU FLOOR AND CONNECTS TO FLEX WITH NO ABOVE GRADE SUPPORT (SUCH AS EQUIPMENT OR WALLS).

## CONDUIT TRANSITION & SUPPORT DETAIL

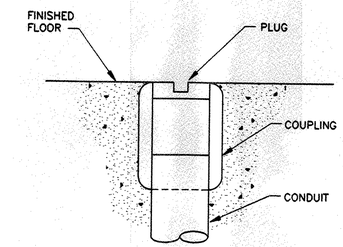


## FLUSH CONDUIT STUB DETAIL

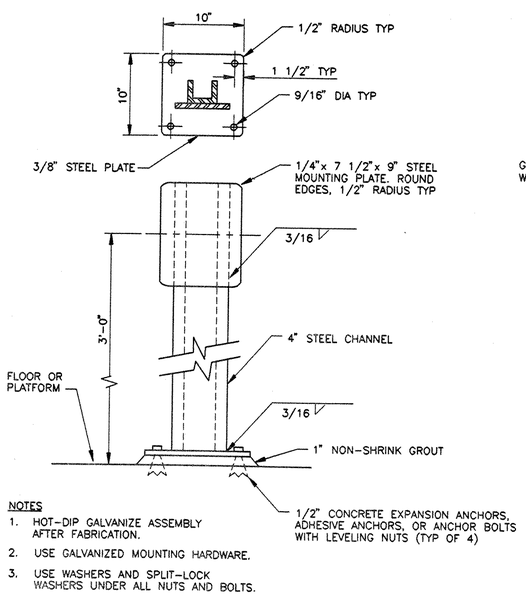


NOTES
1. HOT-DIP GALVANIZE ASSEMBLY AFTER FABRICATION.
2. USE GALVANIZED MOUNTING HARDWARE.
3. USE WASHERS AND SPLIT-LOCK WASHERS UNDER ALL NUTS AND BOLTS.

## EQUIPMENT MOUNTING PEDESTAL DETAIL

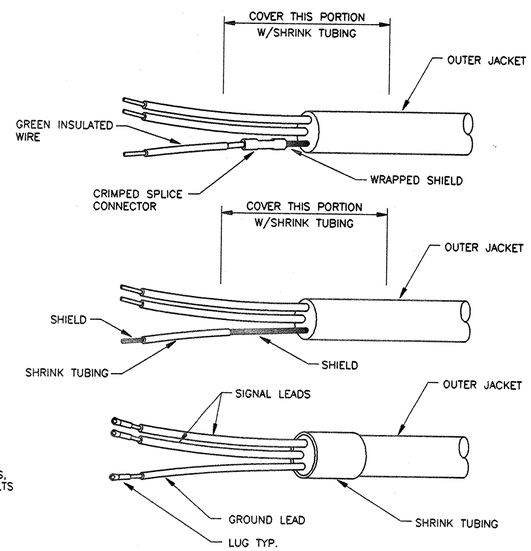


## TERMINATION OF SHIELDED CONTROL CABLE DETAIL

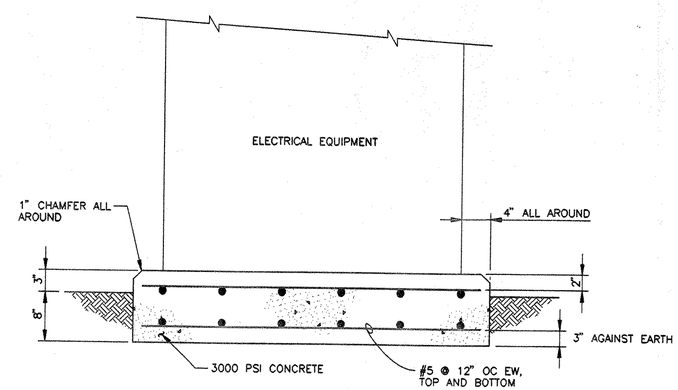


## EQUIPMENT DETAIL

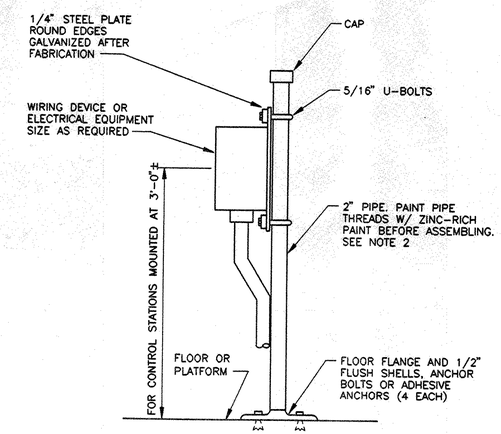


NOTES
1. ALL MOUNTING HARDWARE TO BE STAINLESS STEEL. USE WASHERS AND SPLIT LOCK-WASHERS UNDER ALL NUTS.
2. PIPE AND FITTINGS: GALVANIZED STEEL PIPE MEETING ASTM A120, SCHEDULE 40 WALL THICKNESS. THREADED 150-POUND MALLEABLE IRON FLOOR FLANGE MEETING ASTM A197. ANSI STANDARD PIPE THREADS ON PIPE AND FITTINGS.

## PEDESTAL MOUNTED DEVICE DETAIL

HDR

| | | |
|---|---|---|
| R | RECORD DRAWING | 6/97 |

NORTH CAROLINA PROFESSIONAL SEAL

Project Manager: R. HAMILTON
Architect: G. GENRICH
I&C/Process: R. HAMILTON

**City of Hickory**

**Electrical Standard Details**

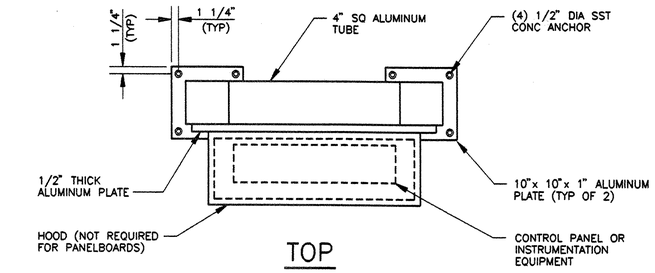


TOP

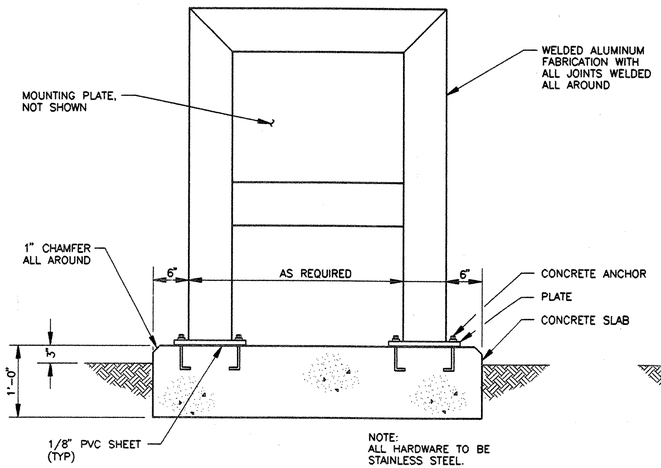


FRONT

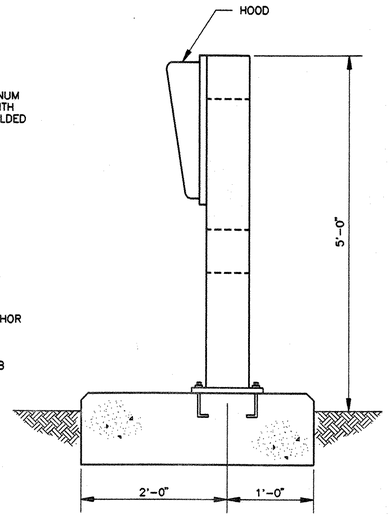


SIDE

EQUIPMENT SUPPORT FRAME DETAIL

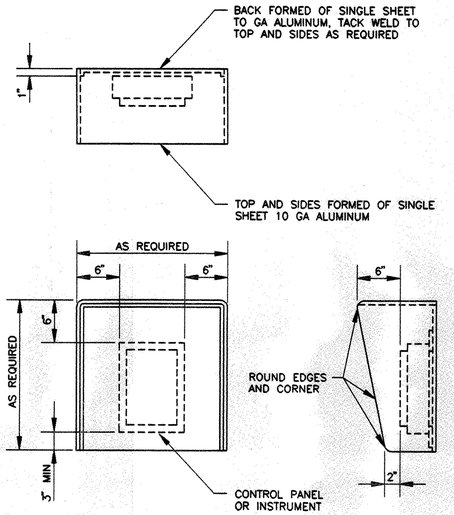


NOTES:
1. ALL EXPOSED EDGES TO BE GROUND SMOOTH AND BURR FREE.

HOOD DETAIL

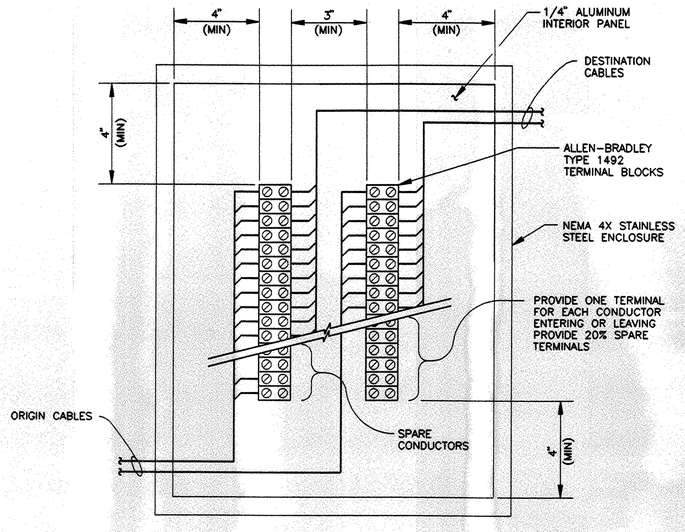


NOTES:
1. THIS DETAIL APPLIES TO ALL TERMINAL BOXES (TB).
2. CABLES WHICH PASS THROUGH A TB WITHOUT CHANGING NAMES NEED NOT BE TERMINATED IN THAT TB.

TERMINAL BOX DETAIL

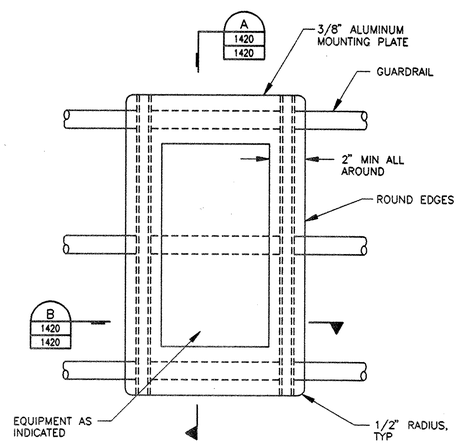


ELEVATION

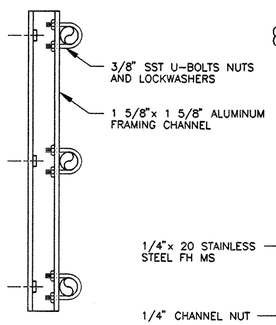


SECTION A 1420 1420

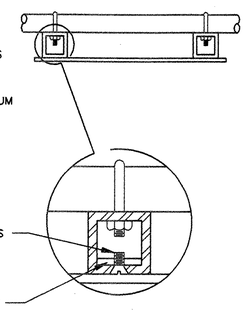


SECTION B 1420 1420

HANDRAIL MOUNTED EQUIPMENT SUPPORT DETAIL

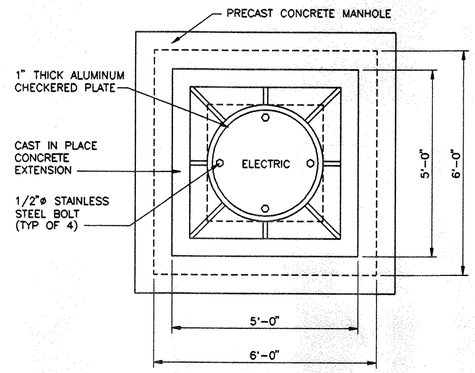


TOP VIEW

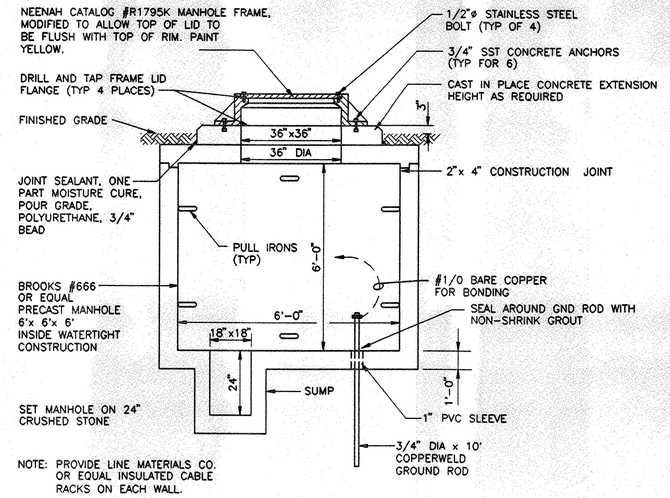


SECTION

MANHOLE DETAIL

HDR

HDR Engineering, Inc. of North Carolina

| Issue No. | Description | Date | Drwn. | Chkd. | Resp. Engr. | Proj. Mgr. |
|---|---|---|---|---|---|---|
| R | RECORD DRAWING | 6/97 | | | | |
| 0 | ISSUED FOR CONSTRUCTION | 5/19/94 | | | | |
| B | ISSUED FOR BIDS | 1/10/94 | | | | |
| A | ISSUED FOR APPROVAL | 6/15/93 | | | | |

NORTH CAROLINA PROFESSIONAL SEAL ENGINEER 5340 RICHARD C. MILLS 1/10/94

| | |
|---|---|
| Project Manager: R. HAMILTON | |
| Architect: G. GENRICH | I&C/Process: R. HAMILTON |
| Civil: K. MOSTELLER | Mechanical: D. DaBOER |
| Electrical: R. MILLS | Structural: N. CABLE |
| | Drawn By: D. PETERSON |

# City of Hickory
## Henry Fork WWTP
## Expansion and Upgrade
## Contract C - Electrical

Hickory North Carolina

# Electrical Standard Details

| Date | Project No. | Sheet No. | Issue |
|---|---|---|---|
| NOV - 1993 | 00231-012-018 | 1421 | R |

Scale: NO SCALE

P:\HICKORY2\HF-1421

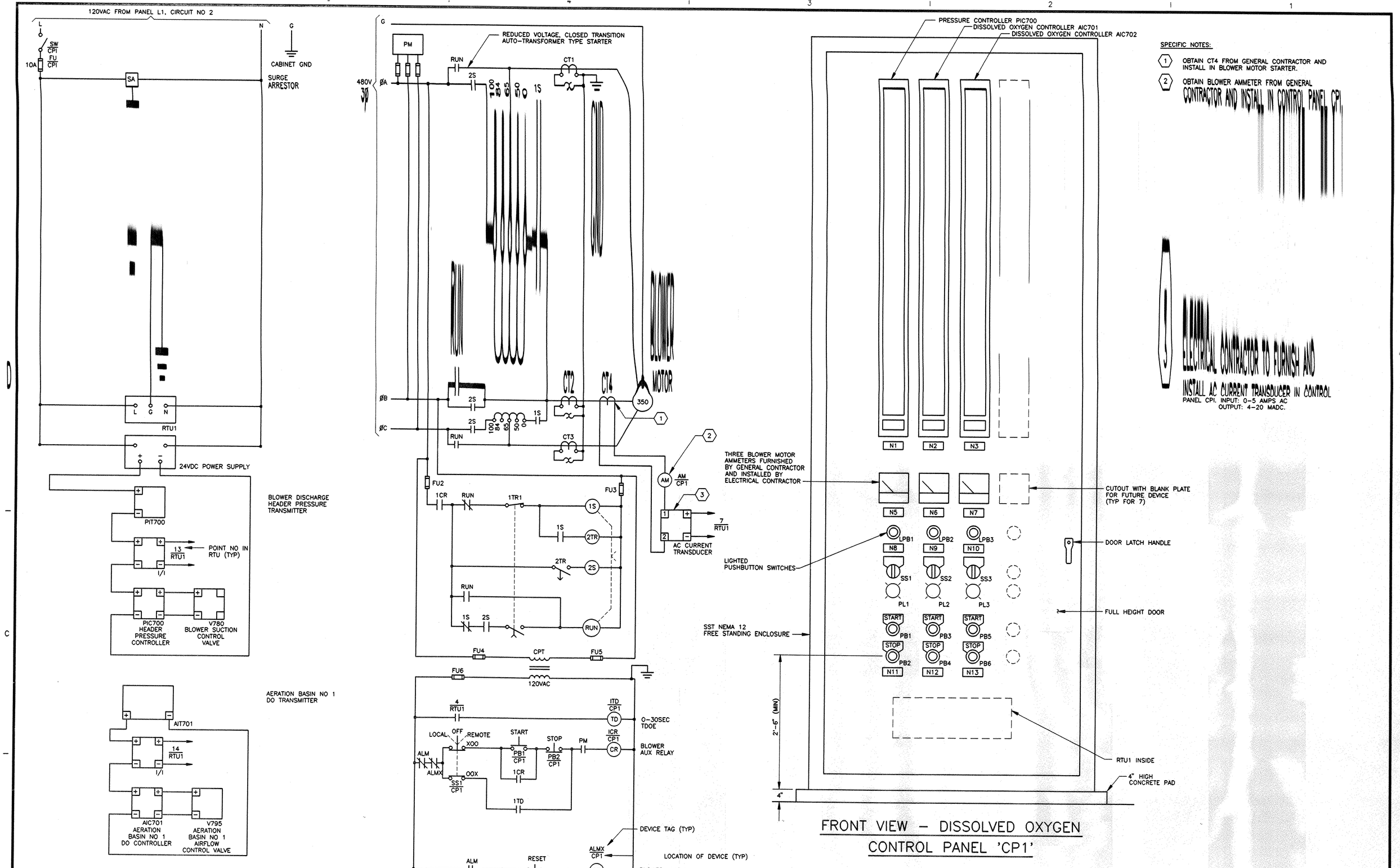


FRONT VIEW – DISSOLVED OXYGEN CONTROL PANEL 'CP1'

| NAMEPLATE LIST | |
|---|---|
| TAG | INSCRIPTION |
| N1 | BLOWER DISCHARGE PRESSURE |
| N2 | BASIN NO 1 DO CONTROLLER |
| N3 | BASIN NO 2 DO CONTROLLER |

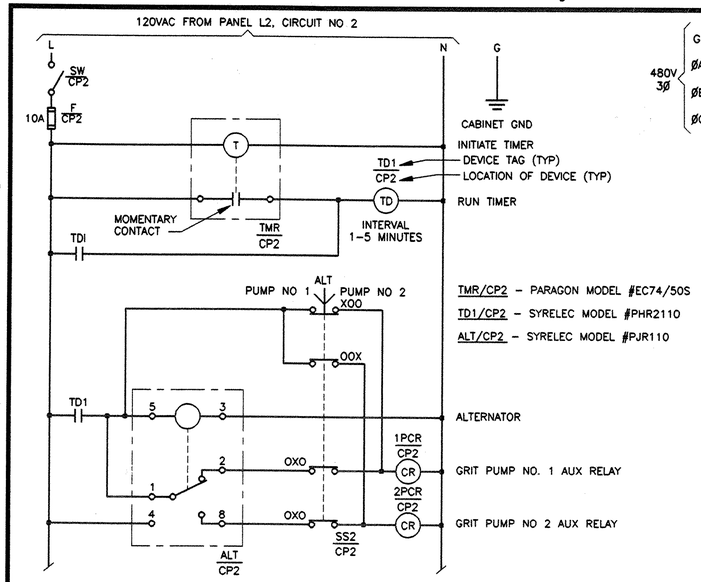


## GRIT PUMP CONTROL PANEL 'CP2' ELEMENTARY CONTROL DIAGRAM

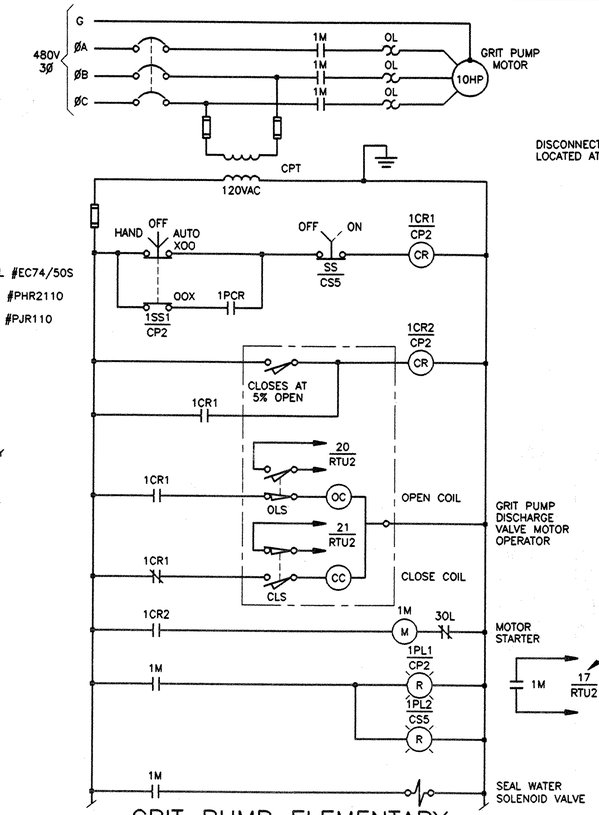


## GRIT PUMP ELEMENTARY CONTROL DIAGRAM

(TYP FOR 2 PUMPS, SHOWN FOR PUMP NO 1)

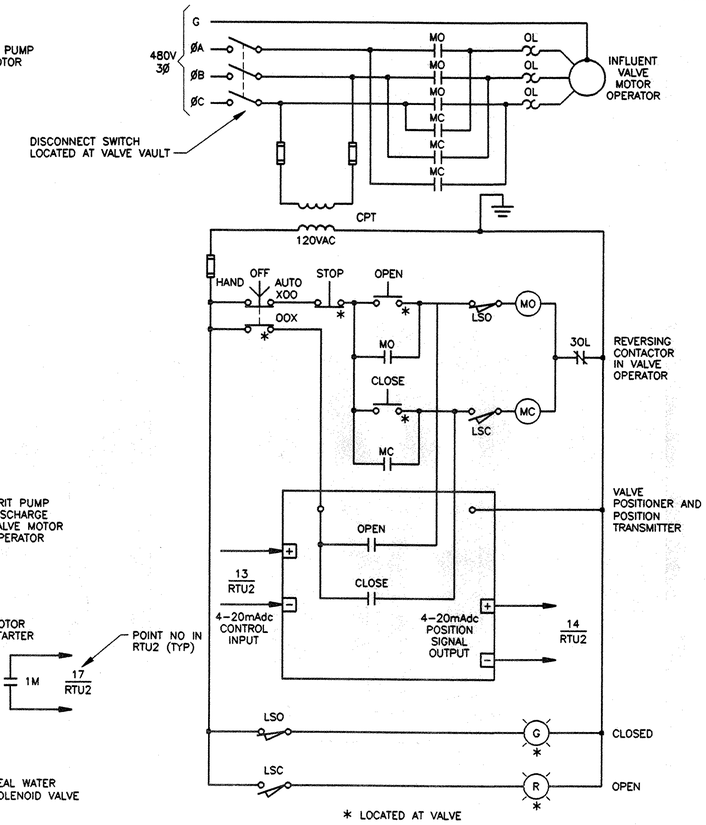


## INFLUENT VALVE ELEMENTARY (EQUALIZATION BASIN EFFLUENT FLOW) CONTROL DIAGRAM

(VALVE SHOWN CLOSED)

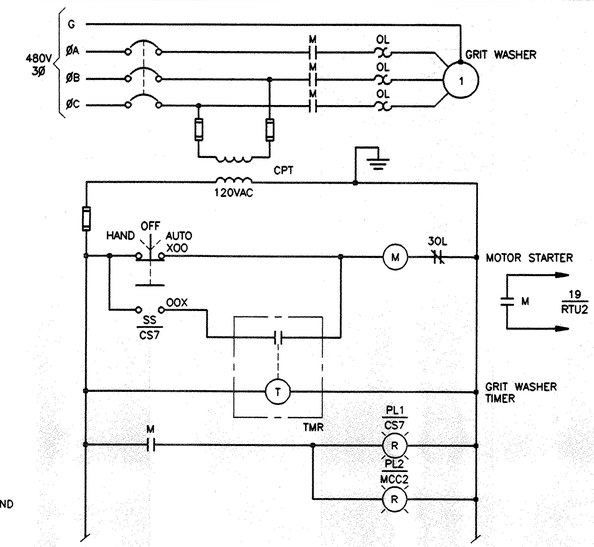


## GRIT WASHER ELEMENTARY CONTROL DIAGRAM

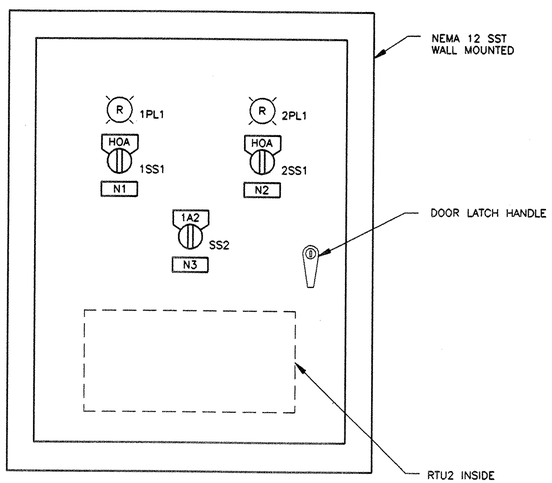


## FRONT VIEW - GRIT PUMP CONTROL PANEL 'CP2'

| NAMEPLATE LIST | |
|---|---|
| TAG | INSCRIPTION |
| N1 | GRIT PUMP NO 1 |
| N2 | GRIT PUMP NO 2 |
| N3 | MODE SELECTOR |

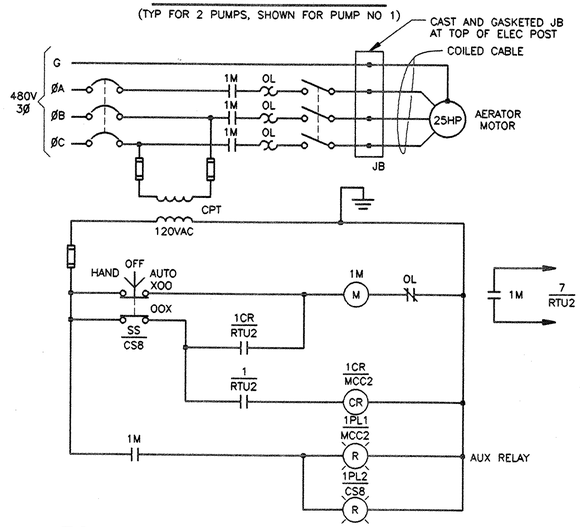


## EQUALIZATION BASIN AERATOR ELEMENTARY CONTROL DIAGRAM

(TYP FOR 6 AERATORS, SHOWN FOR AERATOR NO 1))

HDR

HDR Engineering, Inc. of North Carolina

| Issue No. | Description | Date | Drwn. | Chkd. | Resp. Engr. | Proj. Mgr. |
|---|---|---|---|---|---|---|
| R | RECORD DRAWING | 6/97 | | | | |
| 0 | ISSUED FOR CONSTRUCTION | 5/19/94 | | | | |
| B | ISSUED FOR BIDS | 1/10/94 | | | | |
| A | ISSUED FOR APPROVAL | 6/15/93 | | | | |

NORTH CAROLINA PROFESSIONAL SEAL 5340 ENGINEER RICHARD C. MILLS 1/10/94

| | |
|---|---|
| Project Manager | R. HAMILTON |
| Architect | G. GENRICH |
| I&C/Process | R. HAMILTON |
| Civil | K. MOSTELLER |
| Mechanical | D. DeBOER |
| Electrical | R. MILLS |
| Structural | N. CABLE |
| Drawn By | D. PETERSON |

City of Hickory
Henry Fork WWTP
Expansion and Upgrade
Contract C - Electrical

Hickory North Carolina

Grit Pumps Control Panel CP2

| Date | Project No. | Sheet No. | Issue |
|---|---|---|---|
| NOV 1993 | 00231-012-018 | 1423 | R |

Scale: NO SCALE

P:\HICKORY2\HF-1423

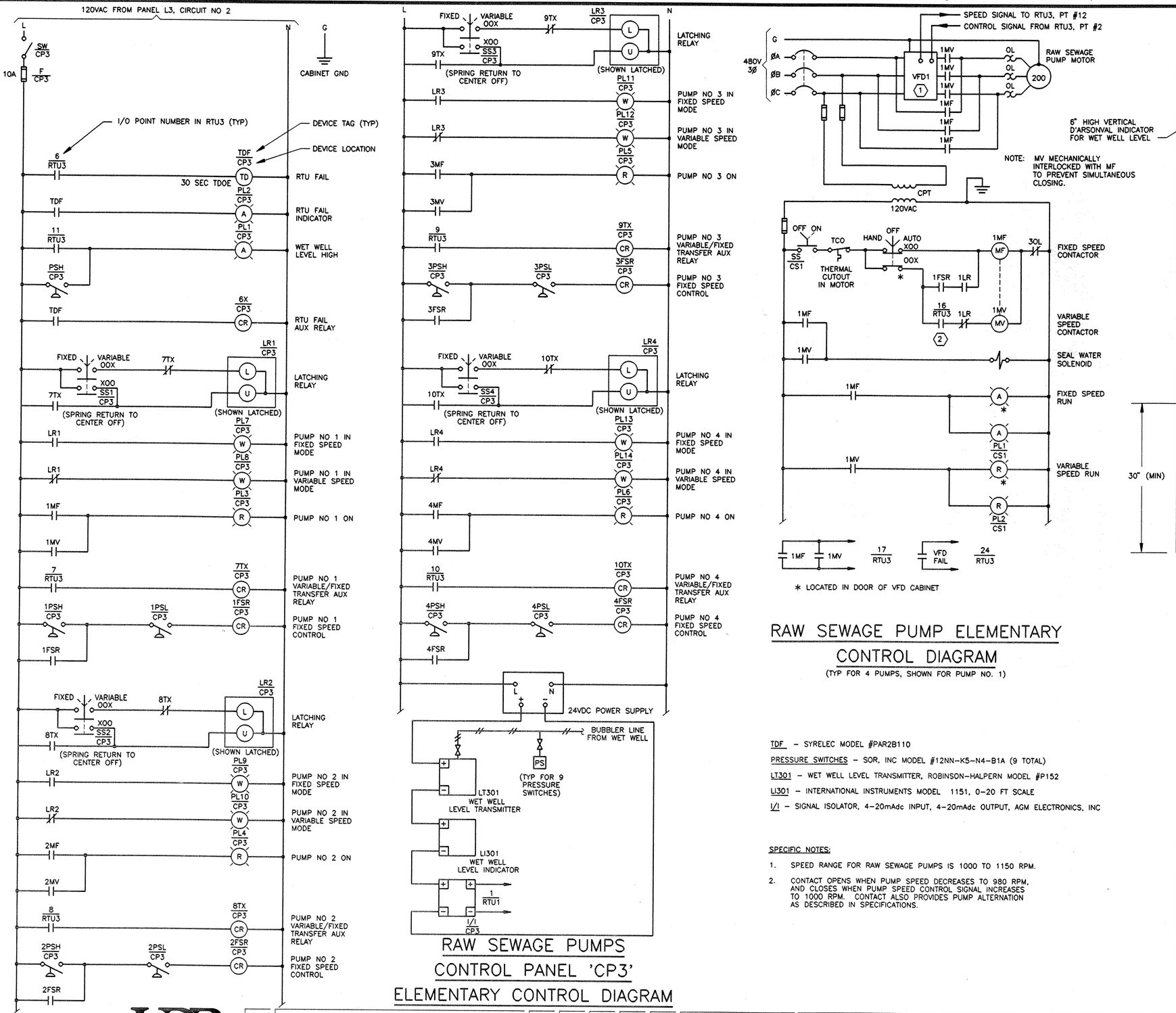


RAW SEWAGE PUMPS
CONTROL PANEL 'CP3'
ELEMENTARY CONTROL DIAGRAM




NOTE: MV MECHANICALLY INTERLOCKED WITH MF TO PREVENT SIMULTANEOUS CLOSING.

* LOCATED IN DOOR OF VFD CABINET

RAW SEWAGE PUMP ELEMENTARY
CONTROL DIAGRAM
(TYP FOR 4 PUMPS, SHOWN FOR PUMP NO. 1)

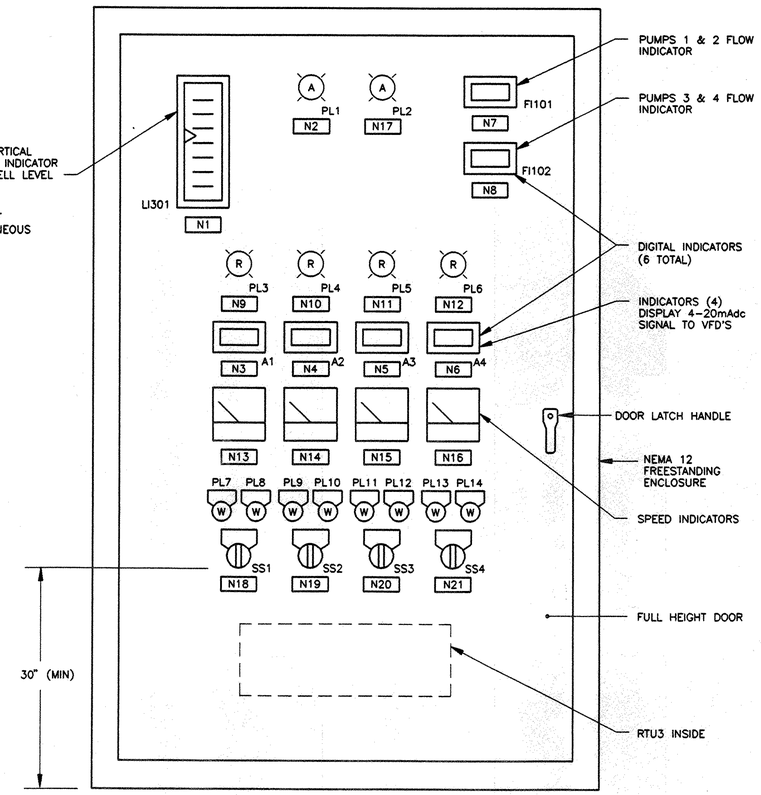


FRONT VIEW – RAW SEWAGE PUMPS
CONTROL PANEL 'CP3'

TDF – SYRELEC MODEL #PAR2B110

PRESSURE SWITCHES – SOR, INC MODEL #12NN-K5-N4-B1A (9 TOTAL)

LT301 – WET WELL LEVEL TRANSMITTER, ROBINSON-HALPERN MODEL #P152

LI301 – INTERNATIONAL INSTRUMENTS MODEL 1151, 0-20 FT SCALE

I/I – SIGNAL ISOLATOR, 4-20mAdc INPUT, 4-20mAdc OUTPUT, AGM ELECTRONICS, INC

SPECIFIC NOTES:

1. SPEED RANGE FOR RAW SEWAGE PUMPS IS 1000 TO 1150 RPM.
2. CONTACT OPENS WHEN PUMP SPEED DECREASES TO 980 RPM, AND CLOSES WHEN PUMP SPEED CONTROL SIGNAL INCREASES TO 1000 RPM. CONTACT ALSO PROVIDES PUMP ALTERNATION AS DESCRIBED IN SPECIFICATIONS.

NAMEPLATE LIST

| TAG | INSCRIPTION |
|---|---|
| N1 | WET WELL LEVEL |
| N2 | WET WELL LEVEL HIGH |
| N3 | PUMP NO 1 SPEED CONTROL SIGNAL |
| N4 | PUMP NO 2 SPEED CONTROL SIGNAL |
| N5 | PUMP NO 3 SPEED CONTROL SIGNAL |
| N6 | PUMP NO 4 SPEED CONTROL SIGNAL |
| N7 | PUMPS 1 AND 2 FLOW |
| N8 | PUMPS 3 AND 4 FLOW |
| N9 | PUMP NO 1 ON |
| N10 | PUMP NO 2 ON |
| N11 | PUMP NO 3 ON |
| N12 | PUMP NO 4 ON |
| N13 | PUMP NO 1 SPEED |
| N14 | PUMP NO 2 SPEED |
| N15 | PUMP NO 3 SPEED |
| N16 | PUMP NO 4 SPEED |
| N17 | PLC FAIL |
| N18 | PUMP NO 1 |
| N19 | PUMP NO 2 |
| N20 | PUMP NO 3 |
| N21 | PUMP NO 4 |

HDR

HDR Engineering, Inc. of North Carolina

| Issue No. | Description | Date | Drwn. | Chkd. | Resp. Engr. | Proj. Mgr. |
|---|---|---|---|---|---|---|
| R | RECORD DRAWING | 6/97 | | | | |
| 0 | ISSUED FOR CONSTRUCTION | 5/19/94 | | | | |
| B | ISSUED FOR BIDS | 1/10/94 | | | | |
| A | ISSUED FOR APPROVAL | 6/15/93 | | | | |

NORTH CAROLINA PROFESSIONAL SEAL 5340 ENGINEER RICHARD C. MILLS 1/10/94

Project Manager: R. HAMILTON
Architect: G. GENRICH
Civil: K. MOSTELLER
Electrical: R. MILLS
I&C/Process: R. HAMILTON
Mechanical: D. DeBOER
Structural: N. CABLE
Drawn By: D. PETERSON

City of Hickory
Henry Fork WWTP
Expansion and Upgrade
Contract C - Electrical
Hickory North Carolina

Raw Sewage Pumps Control Panel CP3

Date: NOV 1993
Scale: NO SCALE
Project No.: 00231-012-018
Sheet No.: 1424
Issue: R

P:\HICKORY2\HF-1424

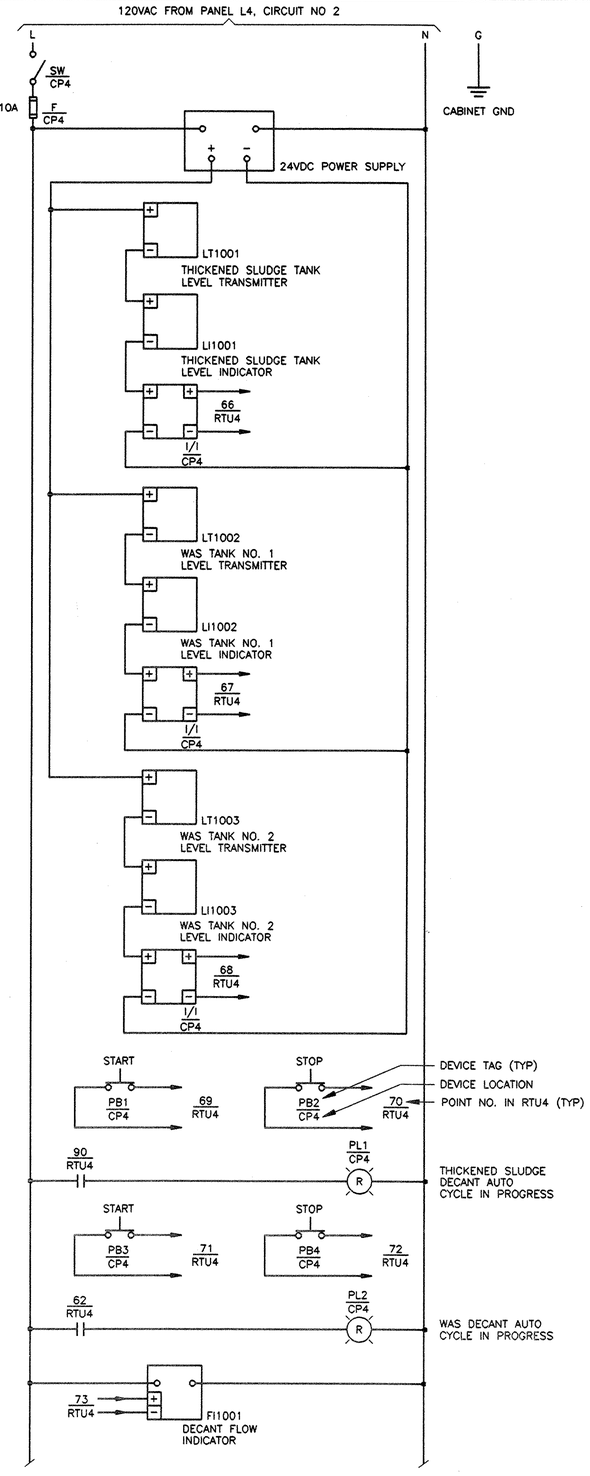


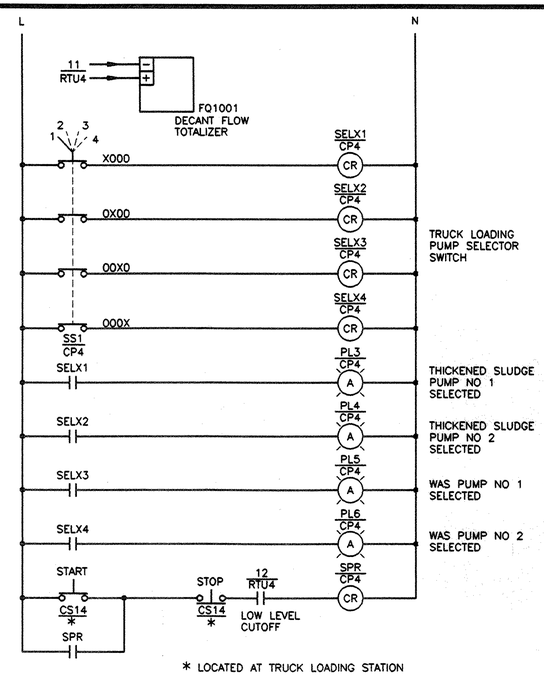


* LOCATED AT TRUCK LOADING STATION

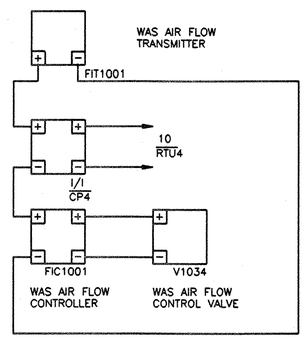


LI1001, LI1002, & LI1003 – INTERNATIONAL INSTRUMENTS MODEL #1151
I/I – SIGNAL ISOLATOR, AGM ELECTRONICS
LT1001, LT1002, & LT1003 – ROBINSON-HALPERN MODEL #P152

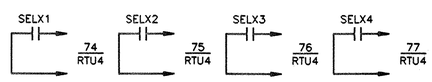


## DECANT CONTROL PANEL
## ELEMENTARY CONTROL WIRING DIAGRAM

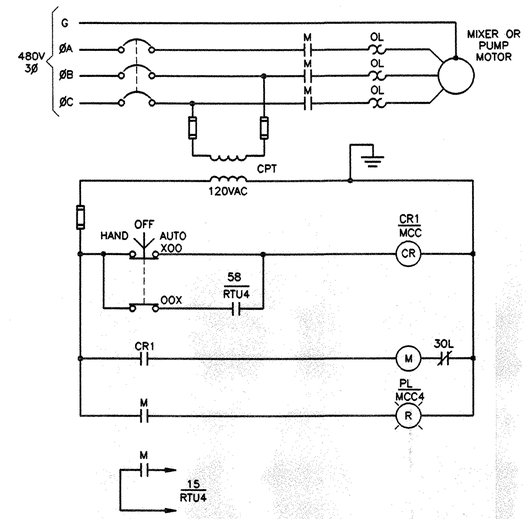


## SLUDGE TANK MIXER AND DECANT PUMP
## ELEMENTARY CONTROL DIAGRAM

(TYP FOR 2 PUMPS AND 2 MIXERS, SHOWN FOR DECANT PUMP NO.1)

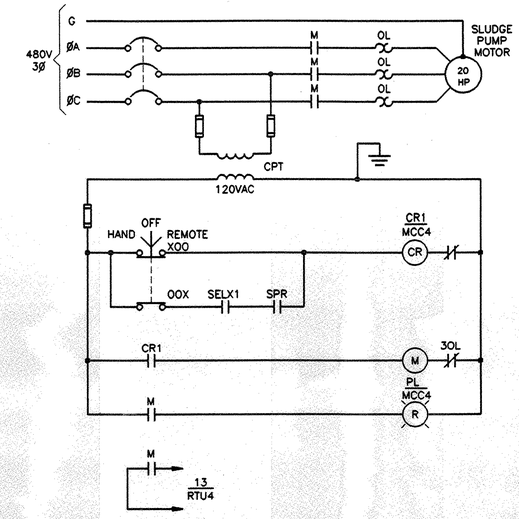


## TRUCK LOADING PUMPS
## ELEMENTARY CONTROL DIAGRAM

(TYP FOR 2 THICKENED SLUDGE PUMPS AND 2 TWAS PUMPS)
(SHOWN FOR THICKENED SLUDGE PUMP NO.1)

HDR Engineering, Inc. of North Carolina

| Issue No. | Description | Date | Drwn. | Chkd. | Resp. Engr. | Proj. Mgr. |
|---|---|---|---|---|---|---|
| R | RECORD DRAWING | 6/97 | | | | |
| 0 | ISSUED FOR CONSTRUCTION | 5/19/94 | | | | |
| B | ISSUED FOR BIDS | 1/10/94 | | | | |
| A | ISSUED FOR APPROVAL | 6/15/93 | | | | |

NORTH CAROLINA PROFESSIONAL SEAL 5340 ENGINEER RICHARD C. MILLS 1/10/94

| | |
|---|---|
| Project Manager | R. HAMILTON |
| Architect | G. GENRICH |
| Civil | K. MOSTELLER |
| Electrical | R. MILLS |
| I&C/Process | R. HAMILTON |
| Mechanical | D. DeBOER |
| Structural | N. CABLE |
| Drawn By | D. PETERSON |

City of Hickory
Henry Fork WWTP
Expansion and Upgrade
Contract C - Electrical

Hickory North Carolina

Decant Control Panel CP4

| Date | Project No. | Sheet No. | Issue |
|---|---|---|---|
| NOV 1993 | 00231-012-018 | 1425 | R |
| Scale: NO SCALE | | | |

P:\HICKORY2\HF-1425

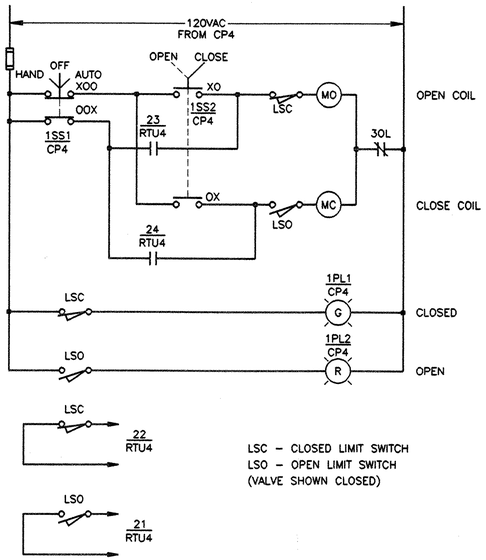


## MOTOR OPERATED VALVE ELEMENTARY CONTROL DIAGRAM

(TYP FOR NINE DECANT VALVES, SHOWN FOR VALVE V103)

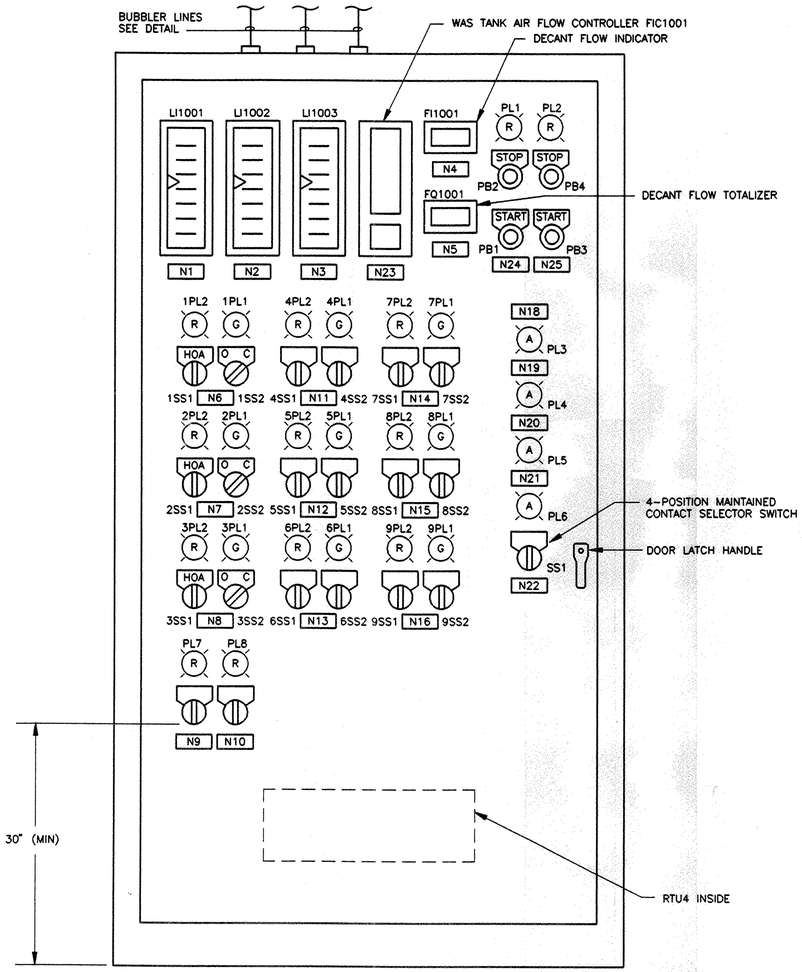


## FRONT VIEW – DECANT CONTROL PANEL

| NAMEPLATE LIST | |
|---|---|
| TAG | INSCRIPTION |
| N1 | PRIMARY SLUDGE TANK LEVEL |
| N2 | WAS TANK NO 1 LEVEL |
| N3 | WAS TANK NO 2 LEVEL |
| N4 | DECANT FLOW |
| N5 | DECANT TOTAL FLOW |
| N6 | PRIMARY SLUDGE TANK UPPER DECANT VALVE |
| N7 | PRIMARY SLUDGE TANK MIDDLE DECANT VALVE |
| N8 | PRIMARY SLUDGE TANK LOWER DECANT VALVE |
| N9 | DECANT PUMP NO. 1 |
| N10 | DECANT PUMP NO. 2 |
| N11 | WAS TANK NO 1 UPPER DECANT VALVE |
| N12 | WAS TANK NO 1 MIDDLE DECANT VALVE |
| N13 | WAS TANK NO 1 LOWER DECANT VALVE |
| N14 | WAS TANK NO 2 UPPER DECANT VALVE |
| N15 | WAS TANK NO 2 MIDDLE DECANT VALVE |
| N16 | WAS TANK NO 2 LOWER DECANT VALVE |
| N17 | WAS TANKS AIR SUPPLY VALVE |
| N18 | PRIMARY SLUDGE PUMP NO 1 |
| N19 | PRIMARY SLUDGE PUMP NO 2 |
| N20 | TWAS PUMP NO 1 |
| N21 | TWAS PUMP NO 2 |
| N22 | TRUCK LOADING PUMP SELECTOR |
| N23 | WAS TANK AIR FLOW |
| N24 | PRIMARY SLUDGE DECANT AUTO CYCLE |
| N25 | WASTE SLUDGE DECANT AUTO CYCLE |

HDR Engineering, Inc. of North Carolina

| Issue No. | Description | Date | Drwn. | Chkd. | Resp. Engr. | Proj. Mgr. |
|---|---|---|---|---|---|---|
| R | RECORD DRAWING | 6/97 | | | | |
| 0 | ISSUED FOR CONSTRUCTION | 5/19/94 | | | | |
| B | ISSUED FOR BIDS | 1/10/94 | | | | |
| A | ISSUED FOR APPROVAL | 6/15/93 | | | | |

NORTH CAROLINA PROFESSIONAL SEAL 5340 ENGINEER RICHARD C. MILLS 1/10/94

Project Manager: R. HAMILTON
Architect: G. GENRICH
Civil: K. MOSTELLER
Electrical: R. MILLS
I&C/Process: R. HAMILTON
Mechanical: D. DeBOER
Structural: N. CABLE
Drawn By: D. PETERSON

City of Hickory
Henry Fork WWTP
Expansion and Upgrade
Contract C – Electrical
Hickory North Carolina

Decant Control Panel CP4

Date: NOV 1993
Scale: NO SCALE
Project No.: 00231-012-018
Sheet No.: 1426
Issue: R

P:\HICKORY2\HF-1426

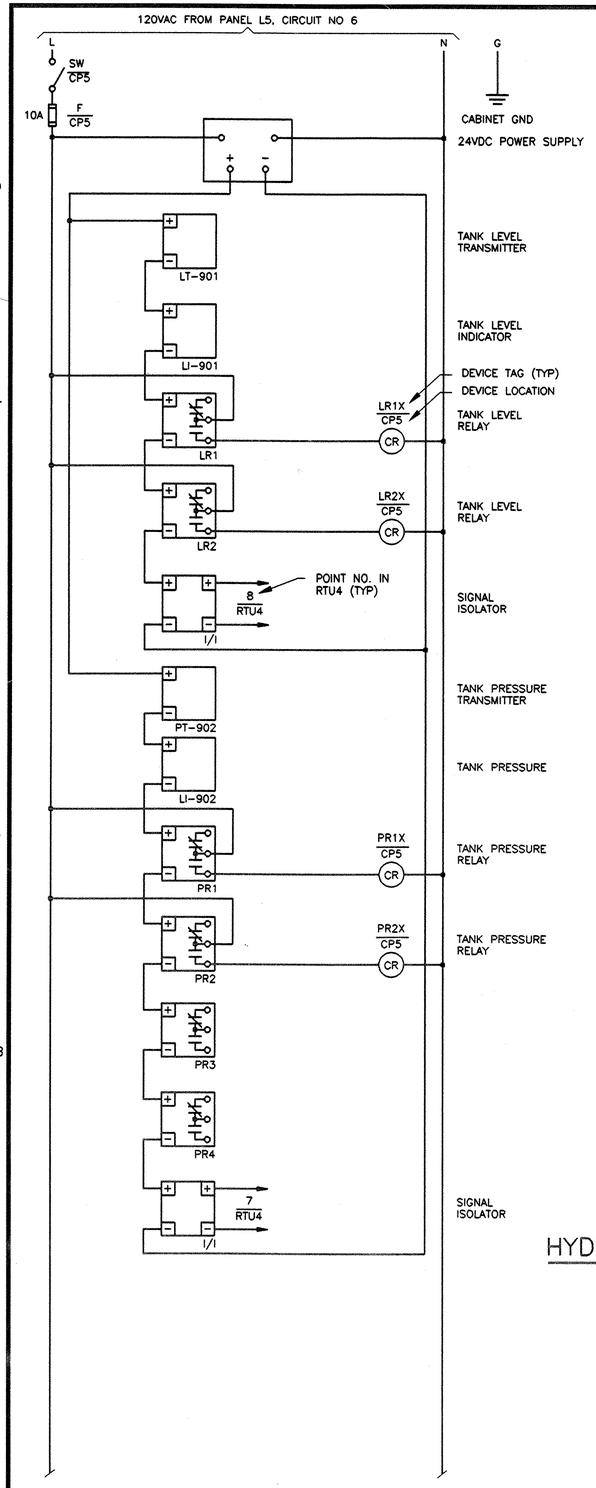


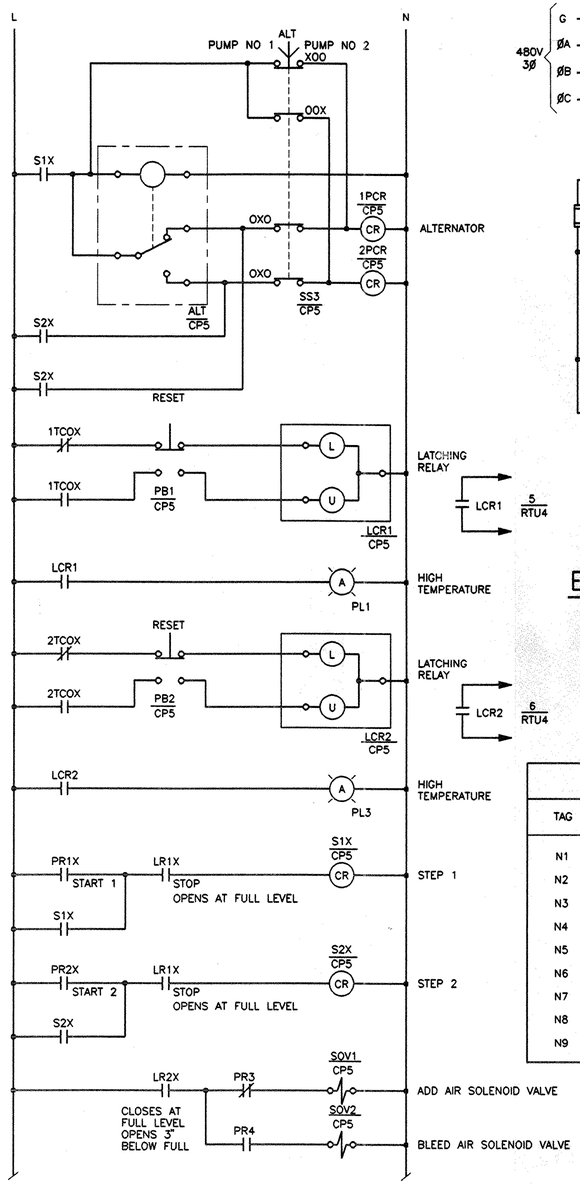


## HYDROPNEUMATIC TANK CONTROL PANEL ELEMENTARY CONTROL DIAGRAM

LR1, LR2, PR1, PR2, PR3, & PR4 – CURRENT TRIP UNITS, AGM ELECTRONICS, INC MOUNTED INSIDE CP5

I/I – SIGNAL ISOLATOR, AGM ELECTRONICS, INC MOUNTED INSIDE CP5

1SFRX, 2SFRX – SYRELEC MODEL #PNRU110 MOUNTED INSIDE CP5

ALT – SYRELEC MODEL #PJR110 MOUNTED INSIDE CP5

LI901, PI901 – INTERNATIONAL INSTRUMENTS MODEL #1151

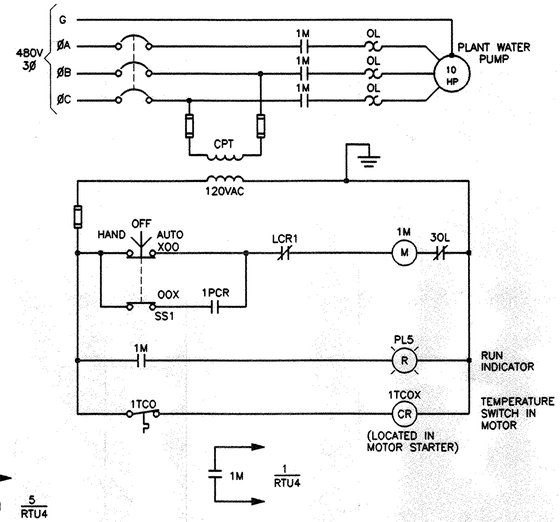


## PLANT WATER PUMP ELEMENTARY CONTROL DIAGRAM

(TYP FOR 2 PUMPS, SHOWN FOR PUMP NO. 1)

| NAMEPLATE LIST | |
|---|---|
| TAG | INSCRIPTION |
| N1 | PLANT WATER TANK LEVEL |
| N2 | PLANT WATER TANK PRESSURE |
| N3 | PLANT WATER PUMP NO 1 HIGH TEMPERATURE |
| N4 | |
| N5 | PLANT WATER PUMP NO 2 HIGH TEMPERATURE |
| N6 | |
| N7 | PLANT WATER PUMP NO 1 |
| N8 | PLANT WATER PUMP NO 2 |
| N9 | MODE SELECTOR |

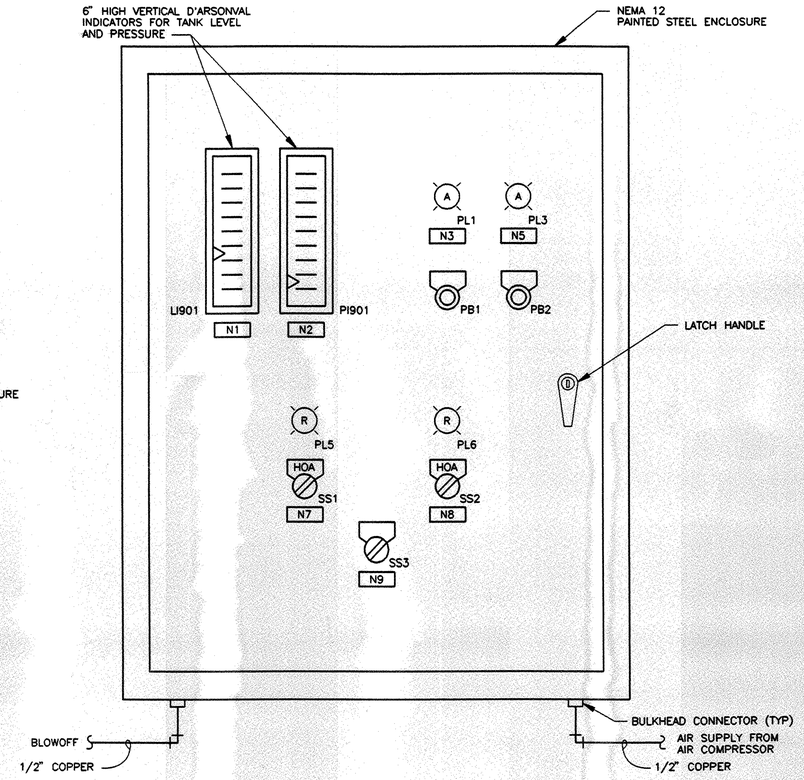


## FRONT VIEW – HYDROPNEUMATIC TANK CONTROL PANEL 'CP5' (PLANT WATER)

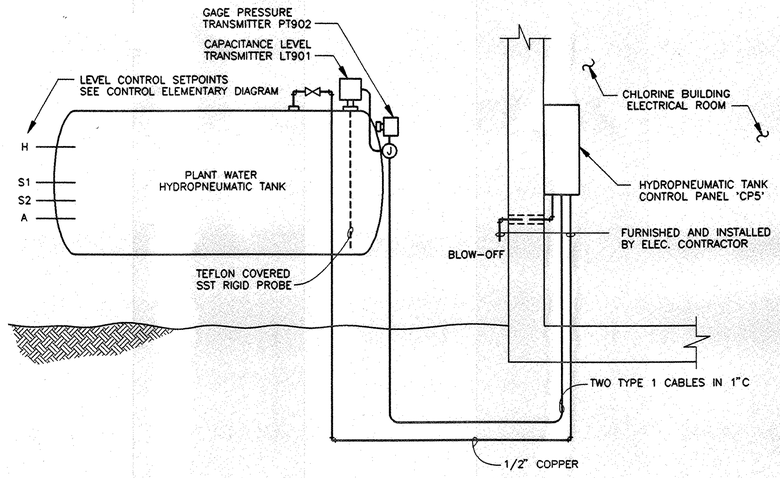


## HYDROPNEUMATIC TANK DETAIL

HDR

HDR Engineering, Inc. of North Carolina

| Issue No. | Description | Date | Drwn. | Chkd. | Resp. Engr. | Proj. Mgr. |
|---|---|---|---|---|---|---|
| R | RECORD DRAWING | 6/97 | | | | |
| 0 | ISSUED FOR CONSTRUCTION | 5/19/94 | | | | |
| B | ISSUED FOR BIDS | 1/10/94 | | | | |
| A | ISSUED FOR APPROVAL | 6/15/93 | | | | |

NORTH CAROLINA PROFESSIONAL SEAL 5340 ENGINEER RICHARD C. MILLS 1/10/94

| | |
|---|---|
| Project Manager: R. HAMILTON | |
| Architect: G. GENRICH | I&C/Process: R. HAMILTON |
| Civil: K. MOSTELLER | Mechanical: D. DeBOER |
| Electrical: R. MILLS | Structural: N. CABLE |
| | Drawn By: D. PETERSON |

Hickory

# City of Hickory
## Henry Fork WWTP
## Expansion and Upgrade
## Contract C – Electrical

North Carolina

## Hydropneumatic Tank Control Panel CP5

| Date | Project No. | Sheet No. | Issue |
|---|---|---|---|
| NOV 1993 | 00231-012-018 | 1427 | R |

Scale: NO SCALE

P:\HICKORY2\HF-1427

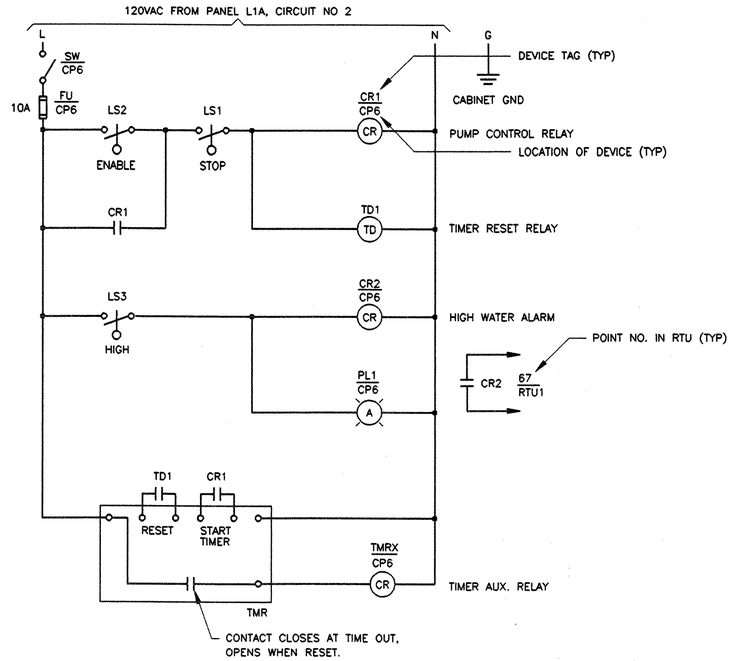


TMR – KESSLER-ELLIS CAT. NO. SCPT-HMS-16-P-2-C-5-U-1-A2
TO TIME UP TO PRESET. RESET TO ZERO.

TRI – ALLEN-BRADLEY CAT NO 700-HR52TA17

NOTE: PROVIDE FLOAT SWITCHES ON STAINLESS STEEL BRACKET IN SCUM WELL. SEE GENERAL CONTRACT DRAWINGS FOR ACTUATION ELEVATIONS.

## SCUM PUMPS CONTROL PANEL 'CP6'
## ELEMENTARY CONTROL DIAGRAM

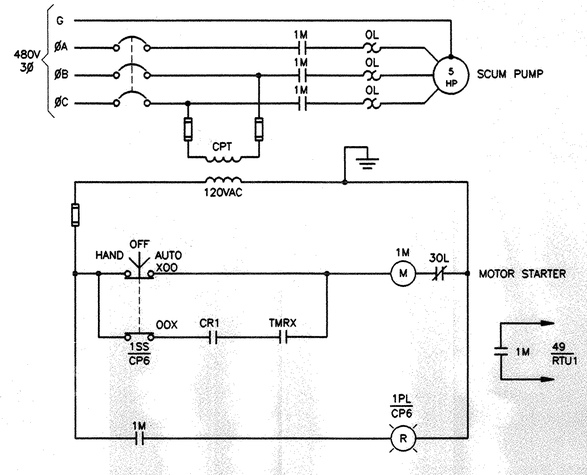


## SCUM PUMP
## ELEMENTARY CONTROL DIAGRAM
(TYP. FOR 2 PUMPS, SHOWN FOR PUMP P713)

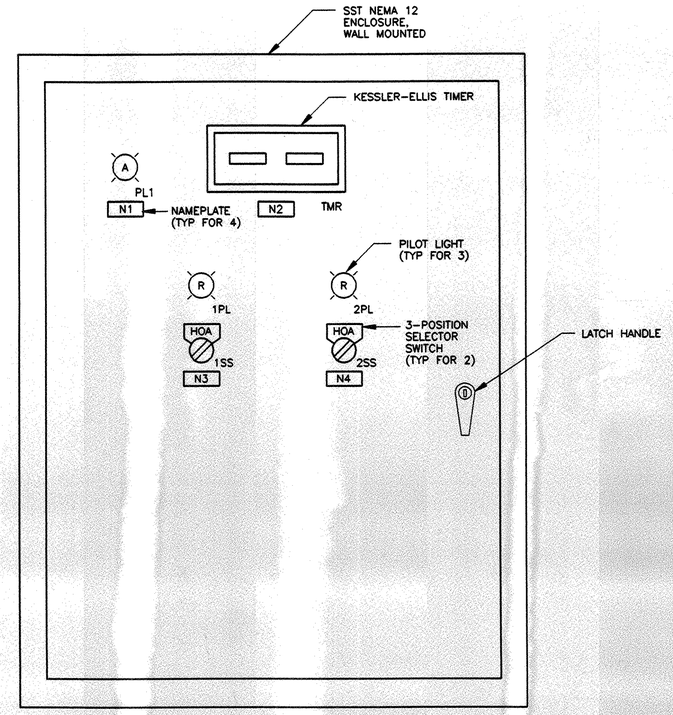


## FRONT VIEW
## SCUM PUMPS CONTROL PANEL 'CP6'

| NAMEPLATE LIST | |
|---|---|
| TAG | INSCRIPTION |
| N1 | SCUM WELL LEVEL HIGH |
| N2 | PUMPING INTERVAL TIMER |
| N3 | SCUM PUMP NO. 1 |
| N4 | SCUM PUMP NO. 2 |

HDR Engineering, Inc. of North Carolina

| Issue No. | Description | Date | Drwn. | Chkd. | Resp. Engr. | Proj. Mgr. |
|---|---|---|---|---|---|---|
| R | RECORD DRAWING | 6/97 | | | | |
| 0 | ISSUED FOR CONSTRUCTION | 5/19/94 | | | | |
| B | ISSUED FOR BIDS | 1/10/94 | | | | |
| A | ISSUED FOR APPROVAL | 6/15/93 | | | | |

NORTH CAROLINA PROFESSIONAL SEAL 5340 ENGINEER RICHARD C. MILLS
1/10/94

Project Manager: R. HAMILTON
Architect: G. GENRICH
Civil: K. MOSTELLER
Electrical: R. MILLS
I&C/Process: R. HAMILTON
Mechanical: D. DeBOER
Structural: N. CABLE
Drawn By: D. PETERSON

City of Hickory
Henry Fork WWTP
Expansion and Upgrade
Contract C - Electrical
Hickory North Carolina

Scum Pumps Control Panel CP6

Date: NOV 1993
Scale: NO SCALE
Project No.: 00231-012-018
Sheet No.: 1428
Issue: R

P:\HICKORY2\HF-1428

# CONDUIT, WIRE, AND CABLE SCHEDULE

| CONDUIT NO | ORIGIN | DESTINATION | CONDUIT | WIRE IN CONDUIT | | | | CABLE IN CONDUIT | | | NOTES |
|---|---|---|---|---|---|---|---|---|---|---|---|
| | | | | POWER | NEUTRAL | GROUND | CONTROL | CONTROL | INSTRUMENTATION | CABLE NO | |
| 1 | XFMR1 | MSB1 | 4 | 3-500MCM | | #3/0 | | | | | |
| 2 | MSB1 | ATS1 | 4 | 3-500MCM | | #3/0 | | | | | |
| 3 | ATS1 | MSB1 | 4 | 3-500MCM | | #3/0 | | | | | |
| 4 | 1000KW GENSET | ATS1 | 4 | 3-500MCM | | #3/0 | | | | | |
| 5 | XFMR2 | MSB2 | 4 | 3-500MCM | | #3/0 | | | | | |
| 6 | MSB2 | ATS2 | 4 | 3-500MCM | | #3/0 | | | | | |
| 7 | ATS2 | DSB2 | 4 | 3-500MCM | | #3/0 | | | | | |
| 8 | DSB1 | MCC1 | 4 | 3-500MCM | | #3/0 | | | | | |
| 9 | DSB1 | MCC2 | 4 | 3-500MCM | | #3/0 | | | | | |
| 10 | DSB2 | MCC3 | 4 | 3-500MCM | | #3/0 | | | | | |
| 11 | DSB2 | MCC4 | 4 | 3-500MCM | | #3/0 | | | | | |
| 12 | DSB2 | EXIST MAIN SWITCHBOARD | 4 | 3-500MCM | | #3/0 | | | | | |
| 13 | L1 | L1B | 1 1/4 | 2#2 | #2 | #6 | | | | | |
| 14 | ATS1 | 1000KW GENSET | 1 | | | #12 | 6#12 | | | | CONTROL |
| 15 | 1000KW GENSET | CP1 | 3/4 | | | #14 | 6#14 | | | | |
| 16 | | | | | | | | | | | |
| 17 | | | | | | | | | | | |
| 18 | | | | | | | | | | | |
| 19 | DSB1 | MS4 | 3 | | | | | | | | EMPTY CONDUIT |
| 20 | MS4 | BLOWER NO 4 MOTOR | 3 | | | | | | | | EMPTY CONDUIT |
| 21 | DSB2 | P301 VFD | 2 1/2 | 3#4/0 | | #1/0 | | | | | |
| 22 | P301 VFD | P301 | 2 1/2 | 3#4/0 | | #1/0 | | | | | |
| 23 | DSB2 | P302 VFD | 2 1/2 | 3#4/0 | | #1/0 | | | | | |
| 24 | P302 VFD | P302 | 2 1/2 | 3#4/0 | | #1/0 | | | | | |
| 25 | DSB2 | P303 VFD | 2 1/2 | 3#4/0 | | #1/0 | | | | | |
| 26 | P303 VFD | P303 | 2 1/2 | 3#4/0 | | #1/0 | | | | | |
| 27 | DSB2 | P304VFD | 2 1/2 | 3#4/0 | | #1/0 | | | | | |
| 28 | P304 VFD | P304 | 2 1/2 | 3#4/0 | | #1/0 | | | | | |
| 29 | MCC3 | BAR SCREEN DISCONNECT SWITCH | 3/4 | 3#10 | | #10 | | | | | |
| 30 | BAR SCREEN DISCONNECT SWITCH | BAR SCREEN CONTROL PANEL | 3/4 | 3#10 | | #10 | | | | | |
| 31 | MCC3 | H3 | 1 1/2 | 3#2 | | #6 | | | | | |
| 32 | H3 | T3 | 1 | 2#6 | | #8 | | | | | |
| 33 | T3 | L3 | 1 1/2 | 2#1 | #1 | #6 | | | | | |
| 34 | MCC3 | H5 | 4 | 3-500MCM | | #3/0 | | | | | |
| 35 | H5 | T5 | 1 | 2#6 | | #8 | | | | | |
| 36 | T5 | L5 | 1 1/2 | 2#1 | #1 | #6 | | | | | |
| 37 | MCC3 | DISCONNECT SWITCH FOR EXISTING BAR SCREEN | 3/4 | 3#10 | | #10 | | | | | |
| 38 | DISCONNECT SWITCH FOR EXISTING BAR SCREEN | BAR SCREEN CONTROL PANEL | 3/4 | 3#10 | | #10 | | | | | |
| 39 | L3 | SUMP PUMP CTRL PANEL DISCONNECT SWITCH | 3/4 | 2#8 | #10 | #10 | | | | | |
| 40 | SUMP PUMP CTRL PANEL DISCONNECT SWITCH | SUMP PUMP CTRL PANEL | 3/4 | 2#8 | #10 | #10 | | | | | |

# CONDUIT, WIRE, AND CABLE SCHEDULE

| CONDUIT NO | ORIGIN | DESTINATION | CONDUIT | WIRE IN CONDUIT | | | | CABLE IN CONDUIT | | | NOTES |
|---|---|---|---|---|---|---|---|---|---|---|---|
| | | | | POWER | NEUTRAL | GROUND | CONTROL | CONTROL | INSTRUMENTATION | CABLE NO | |
| 41 | MCC3 | HOIST DISCONNECT SWITCH | 3/4 | 3#12 | | #12 | | | | | |
| 42 | HOIST DISCONNECT SWITCH | HOIST | 3/4 | 3#12 | | #12 | | | | | |
| 43 | MCC3 | PANEL EP4 DISC SWITCH | 3/4 | 3#10 | | #10 | | | | | |
| 44 | PANEL EP4 DISC SWITCH | PANEL EP4 XFMR | 3/4 | 3#10 | | #10 | | | | | |
| 45 | FIT301 & FIT302 | CP3 | 1 1/2 | | | | | | 1-TYPE 3, 8PR | | ONE PAIR TO EACH XMTR |
| 46 | RAW SEWAGE PUMP NO 1 | PUMP NO 1 VFD | 3/4 | | | #12 | 4#12 | | | | |
| 47 | RAW SEWAGE PUMP NO 2 | PUMP NO 2 VFD | 3/4 | | | #12 | 4#12 | | | | |
| 48 | RAW SEWAGE PUMP NO 3 | PUMP NO 3 VFD | 3/4 | | | #12 | 4#12 | | | | |
| 49 | RAW SEWAGE PUMP NO 4 | PUMP NO 4 VFD | 3/4 | | | #12 | 4#12 | | | | |
| 50 | RAW SEWAGE PUMPS CONTROL STATIONS | PUMP VFD'S | 1 1/4 | | | #12 | 20#12 | | | | |
| 51 | RAW SEWAGE PUMP STATION DRY PIT FLOOD DETECTOR | CP3 | 3/4 | | | #14 | 2#14 | | | | |
| 52 | H3 | PUMP STATION UNIT HEATER DISC SWITCH | 1 | 3#8 | | #10 | | | | | |
| 53 | PUMP STATION UNIT HEATER DISC SWITCH | PUMP STATION UNIT HEATER | 1 | 3#8 | | #10 | | | | | |
| 54 | DSB1 | MS1 | 3 | 3-300MCM | | #3/0 | | | | | |
| 55 | MS1 | BLOWER B701 | 3 | 3-300MCM | | #3/0 | | | | | |
| 56 | DSB1 | MS2 | 3 | 3-300MCM | | #3/0 | | | | | |
| 57 | MS2 | BLOWER B702 | 3 | 3-300MCM | | #3/0 | | | | | |
| 58 | DSB1 | MS3 | 3 | 3-300MCM | | #3/0 | | | | | |
| 59 | MS3 | BLOWER B703 | 3 | 3-300MCM | | #3/0 | | | | | |
| 60 | MCC1 | P701 | 1 1/4 | 3#6 | | #8 | 2#14 | | | | |
| 61 | MCC1 | P702 | 1 1/4 | 3#6 | | #8 | 2#14 | | | | |
| 62 | MCC1 | P703 | 1 1/4 | 3#6 | | #8 | 2#14 | | | | |
| 63 | MCC1 | P709 | 1 1/2 | 3#2 | | #6 | 2#14 | | | | |
| 64 | MCC1 | P710 | 1 1/2 | 3#2 | | #6 | 2#14 | | | | |
| 65 | MCC1 | P711 | 1 1/2 | 3#2 | | #6 | 2#14 | | | | |
| 66 | MCC1 | P705 | 1 1/2 | 3#2 | | #6 | 2#14 | | | | |
| 67 | MCC1 | P706 | 1 1/2 | 3#2 | | #6 | 2#14 | | | | |
| 68 | MCC1 | P707 | 1 1/2 | 3#12 | | #6 | 2#14 | | | | |
| 69 | MCC1 | P713 | 3/4 | 3#12 | | #12 | | | | | |
| 70 | MCC1 | P714 | 3/4 | 3#12 | | #12 | | | | | |
| 71 | MCC1 | P601 | 1 | 3#8 | | #10 | 4#14 | | | | |
| 72 | MCC1 | P602 | 1 | 3#8 | | #10 | 4#14 | | | | |
| 73 | MCC1 | SECONDARY CLARIFIER NO 1 DISC SWITCH | 1 | 3#12 | | #12 | 6#14 | | | | |
| 74 | SECONDARY CLARIFIER NO 1 DISC SWITCH | SECONDARY CLARIFIER NO 1 DRIVE | 3/4 | 3#12 | | #12 | | | | | |
| 75 | MCC1 | SECONDARY CLARIFIER NO 2 DISC SWITCH | 1 | 3#12 | | #12 | 6#14 | | | | |
| 76 | SECONDARY CLARIFIER NO 2 DISC SWITCH | SECONDARY CLARIFIER NO 2 DRIVE | 3/4 | 3#12 | | #12 | | | | | |
| 77 | MCC1 | H1 | 2 1/2 | 3-250MCM | | #1/0 | | | | | |
| 78 | H1 | T1 | 2 | 2#3/0 | | #2 | | | | | |
| 79 | T1 | L1 | 3 | 2-500 MCM | 500MCM | #3/0 | | | | | |
| 80 | L1 | L1A | 1 1/4 | 2#2 | #2 | #6 | | | | | |

HDR

HDR Engineering, Inc. of North Carolina

| Issue No. | Description | Date | Drwn. | Chkd. | Resp. Engr. | Proj. Mgr. |
|---|---|---|---|---|---|---|
| R | RECORD DRAWING | 6/97 | | | | |
| 0 | ISSUED FOR CONSTRUCTION | 5/19/94 | | | | |
| B | ISSUED FOR BIDS | 1/10/94 | | | | |
| A | ISSUED FOR APPROVAL | 6/15/93 | | | | |

NORTH CAROLINA PROFESSIONAL SEAL 5340 ENGINEER RICHARD C. MILLS 1/10/94

Project Manager: R. HAMILTON
Architect: G. GENRICH
Civil: R. HAMILTON
Electrical: R. MILLS
I&C/Process: R. HAMILTON
Mechanical: D. DeBOER
Structural: N. CABLE
Drawn By: D. PETERSON

City of Hickory
Henry Fork WWTP
Expansion and Upgrade
Contract C - Electrical

Hickory North Carolina

Conduit, Wire, and Cable Schedules

Date: NOV 1993
Scale: NO SCALE
Project No.: 00231-012-018
Sheet No.: 1429
Issue: R

P:\HICKORY2\HF-1429

# CONDUIT, WIRE, AND CABLE SCHEDULE

| CONDUIT NO | ORIGIN | DESTINATION | CONDUIT | WIRE IN CONDUIT | | | | CABLE IN CONDUIT | | | NOTES |
|---|---|---|---|---|---|---|---|---|---|---|---|
| | | | | POWER | NEUTRAL | GROUND | CONTROL | CONTROL | INSTRUMENTATION | CABLE NO | |
| 81 | MCC1 | EF701 DISC SWITCH | 3/4 | 3#12 | | #12 | | | | | |
| 82 | EF701 DISC SWITCH | EF701 | 3/4 | 3#12 | | #12 | | | | | |
| 83 | MCC1 | EF702 DISC SWITCH | 3/4 | 3#12 | | #12 | | | | | |
| 84 | EF702 DISC SWITCH | EF702 | 3/4 | 3#12 | | #12 | | | | | |
| 85 | MCC1 | EF703 DISC SWITCH | 3/4 | 3#12 | | #12 | | | | | |
| 86 | EF703 DISC SWITCH | EF703 | 3/4 | 3#12 | | #12 | | | | | |
| 87 | MCC1 | EF704 DISC SWITCH | 3/4 | 3#12 | | #12 | | | | | |
| 88 | EF704 DISC SWITCH | EF704 | 3/4 | 3#12 | | #12 | | | | | |
| 89 | MCC1 | MU701 DISC SWITCH | 2 1/2 | 3-250MCM | | #1/0 | | | | | |
| 90 | MU701 DISC SWITCH | MU701 CTRL PANEL | 2 1/2 | 3-250MCM | | #1/0 | | | | | |
| 91 | MCC1 | UPPER LEVEL BRIDGE CRANE | 1 | 3#8 | | #10 | | | | | |
| 92 | MCC1 | LOWER LEVEL BRIDGE CRANE | 1 | 3#8 | | #10 | | | | | |
| 93 | FIT701 | FE701 | AS REQD | | | | | | | | SPECIAL CABLE |
| 94 | FIT702 | FE702 | AS REQD | | | | | | | | SPECIAL CABLE |
| 95 | P701, P702, & P703 SPEED CONTROL STATIONS | MCC1 | 2 | | | | | | 3 - TYPE 5<br>6 - TYPE 2 | | 1 - TYPE 5 & 2 - TYPE 2 TO EACH CONTROL |
| 96 | FIT703 | FE703 | AS REQD | | | | | | | | SPECIAL CABLE |
| 97 | FIT704 | FE704 | AS REQD | | | | | | | | SPECIAL CABLE |
| 98 | P704, P705, & P706 SPEED CONTROL STATIONS | MCC1 | 2 | | | | | | 3 - TYPE 5<br>6 - TYPE 2 | | 1 - TYPE 5 & 2 - TYPE 2 TO EACH CONTROL |
| 99 | FIT705 | FE705 | AS REQD | | | | | | | | SPECIAL CABLE |
| 100 | FIT706 | FE706 | AS REQD | | | | | | | | SPECIAL CABLE |
| 101 | P709, P710, & P711 SPEED CONTROL STATIONS | MCC1 | 2 | | | | | | 3 - TYPE 5<br>6 - TYPE 2 | | 1 - TYPE 5 & 2 - TYPE 2 TO EACH CONTROL |
| 102 | LE701 | LIT701 | AS REQD | | | | | | | | SPECIAL CABLE |
| 103 | LE702 | LIT702 | AS REQD | | | | | | | | SPECIAL CABLE |
| 104 | LE703 | LIT703 | AS REQD | | | | | | | | SPECIAL CABLE |
| 105 | ALUM TANK LEVEL XMTRS | CP1 | 1 | | | | | | 3 - TYPE 2 | | ONE PAIR TO EACH XMTR |
| 106 | ALUM PUMP SCR DRIVES | CP1 | 1 1/4 | | | | | | 4 - TYPE 2 | | ONE PAIR TO EACH SCR DRIVE |
| 107 | SCUM PUMP CTRL PANEL | MCC1 | 3/4 | | | #14 | 10#14 | | | | |
| 108 | FIT701 & FIT702 | CP1 | 1 | | | | | | 2 - TYPE 2 | | ONE PAIR TO EACH XMTR |
| 109 | FIT703 & FIT704 | CP1 | 1 | | | | | | 2 - TYPE 2 | | ONE PAIR TO EACH XMTR |
| 110 | FIT705 & FIT706 | CP1 | 1 | | | | | | 2 - TYPE 2 | | ONE PAIR TO EACH XMTR |
| 111 | 750KW GENSET | ATS2 | 4 | 3-500MCM | | #3/0 | | | | | |
| 112 | MCC4 | ODOR CONTROL SYSTEM DISCONNECT SWITCH | 2 1/2 | 3#3/0 | | #2 | | | | | |
| 113 | ODOR CONTROL SYSTEM DISCONNECT SWITCH | ODOR CONTROL SYSTEM | 2 1/2 | 3#3/0 | | #2 | | | | | |
| 114 | MCC4 | P1003 | 3/4 | 3#10 | | #10 | | | | | |
| 115 | MCC4 | P1004 | 3/4 | 3#10 | | #10 | | | | | |
| 116 | MCC4 | P1001 | 1 | 3#6 | | #8 | | | | | |
| 117 | MCC4 | P1002 | 1 | 3#6 | | #8 | | | | | |
| 118 | MCC4 | P1005 | 3/4 | 3#10 | | #10 | | | | | |
| 119 | MCC4 | P1006 | 3/4 | 3#10 | | #10 | | | | | |
| 120 | MCC4 | H4 | 1 1/2 | 3#2 | | #6 | | | | | |

# CONDUIT, WIRE, AND CABLE SCHEDULE

| CONDUIT NO | ORIGIN | DESTINATION | CONDUIT | WIRE IN CONDUIT | | | | CABLE IN CONDUIT | | | NOTES |
|---|---|---|---|---|---|---|---|---|---|---|---|
| | | | | POWER | NEUTRAL | GROUND | CONTROL | CONTROL | INSTRUMENTATION | CABLE NO | |
| 121 | H4 | T4 | 1 | 2#6 | | #8 | | | | | |
| 122 | T4 | L4 | 1 1/2 | 2#1 | #1 | #6 | | | | | |
| 123 | MCC4 | MX1001 DISC SWITCH | 1 | 3#8 | | #8 | 5#14 | | | | |
| 124 | MX1001 DISC SWITCH | MX1001 | 1 | 3#8 | | #8 | | | | | |
| 125 | MCC4 | MX1001 DISC SWITCH | 1 | 3#8 | | #8 | 5#14 | | | | |
| 126 | MX1002 DISC SWITCH | MX1002 | 1 | 3#8 | | #8 | | | | | |
| 127 | MCC2 | GRIT UNIT CTRL PANEL DISC SWITCH | 3/4 | 3#10 | | #10 | | | | | |
| 128 | GRIT UNIT CTRL PANEL DISC SWITCH | GRIT UNIT CONTROL PANEL | 3/4 | 3#10 | | #10 | | | | | |
| 129 | MCC2 | P401 | 1 | 3#8 | | #8 | | | | | |
| 130 | MCC2 | P402 | 1 | 3#8 | | #8 | | | | | |
| 131 | MCC2 | GRIT WASHER | 3/4 | 3#12 | | #12 | | | | | |
| 132 | MCC2 | H2 | 1 1/2 | 3#1 | | #6 | | | | | |
| 133 | H2 | T2 | 1 | 2#6 | | #8 | | | | | |
| 134 | T2 | L2 | 1 1/2 | 2#1 | #1 | #6 | | | | | |
| 135 | L2 | SUMP PUMPS CTRL PANEL DISC SWITCH | 3/4 | 3#10 | | #10 | | | | | |
| 136 | SUMP PUMPS CTRL PANEL DISC SWITCH | SUMP PUMPS CONTROL PANEL | 3/4 | 3#10 | | #10 | | | | | |
| 137 | V403 | CP2 | 3/4 | | | #14 | 10#14 | | | | |
| 138 | V404 | CP2 | 3/4 | | | #14 | 10#14 | | | | |
| 139 | CS5, CS6 | MCC2 | 3/4 | | | #14 | 8#14 | | | | |
| 140 | MCC2 | GRIT WASHER TIMER | 3/4 | | | #14 | 7#14 | | | | |
| 141 | CP2 | MCC2 | 2 | | | #14 | 36#14 | | | | |
| 142 | GRIT UNIT CTRL PANEL | CP2 | 3/4 | | | #14 | 6#14 | | | | |
| 143 | H2 | MU401 DISC SWITCH | 1 | 3#6 | | #8 | | | | | |
| 144 | MU401 DISC SWITCH | MU401 CTRL PANEL | 1 | 3#6 | | #8 | | | | | |
| 145 | MCC2 | HOIST | 3/4 | 3#12 | | #12 | | | | | |
| 146 | FIT501 | CP2 | 1 | | | | | | 1-TYPE 2 | | |
| 147 | V502 | CP2 | 1 | | | | | | 2-TYPE 2 | | |
| 148 | LE501 | LIT501 | 1 | | | | | | | | SPECIAL CABLE |
| 149 | LIT501 | CP2 | 1 | | | | | | 1-TYPE 2 | | |
| 150 | RAW SEWAGE PUMPS VFD'S | SEAL WATER VALVES | 3/4 | | | #14 | 8#14 | | | | |
| 151 | RAW SEWAGE PUMP STATION SUMP PUMPS CTRL PANEL | CP3 | 3/4 | | | #14 | 2#14 | | | | |
| 152 | MSB2 | CP3 | 1 1/2 | | | | | | 7 TYPE 2 | | |
| 153 | ATS2 | CP3 | 3/4 | | | #14 | 4#14 | | | | |
| 154 | VFD4 | CP3 | 1 | | | | | | 1-TYPE 3, 8 PAIR | | |
| 155 | VFD3 | CP3 | 1 | | | | | | 1-TYPE 3, 8 PAIR | | |
| 156 | VFD2 | CP3 | 1 | | | | | | 1-TYPE 3, 8 PAIR | | |
| 157 | VFD1 | CP3 | 1 | | | | | | 1-TYPE 3, 8 PAIR | | |
| 158 | VFD4 | CP3 | 1 | | | | | 1-TYPE 1, 12/C | | | |
| 159 | VFD3 | CP3 | 1 | | | | | 1-TYPE 1, 12/C | | | |
| 160 | VFD2 | CP3 | 1 | | | | | 1-TYPE 1, 12/C | | | |

HDR

HDR Engineering, Inc. of North Carolina

| Issue No. | Description | Date | Drwn. | Chkd. | Resp. Engr. | Proj. Mgr. |
|---|---|---|---|---|---|---|
| R | RECORD DRAWING | 6/97 | | | | |
| 0 | ISSUED FOR CONSTRUCTION | 5/19/94 | | | | |
| B | ISSUED FOR BIDS | 1/10/94 | | | | |
| A | ISSUED FOR APPROVAL | 6/15/93 | | | | |

NORTH CAROLINA PROFESSIONAL SEAL 5340 ENGINEER RICHARD C. MILLS 1/10/94

Project Manager: R. HAMILTON
Architect: G. GENRICH
Civil: K. MOSTELLER
Electrical: R. MILLS
I&C/Process: R. HAMILTON
Mechanical: D. DeBOER
Structural: N. CABLE
Drawn By: D. PETERSON

City of Hickory
Henry Fork WWTP
Expansion and Upgrade
Contract C - Electrical

Hickory North Carolina

Conduit, Wire, and Cable Schedules

Date: NOV 1993
Scale: NO SCALE
Project No.: 00231-012-018
Sheet No.: 1430
Issue: R

P:\HICKORY2\HF-1429

# CONDUIT, WIRE, AND CABLE SCHEDULE

| CONDUIT NO | ORIGIN | DESTINATION | CONDUIT | WIRE IN CONDUIT | | | | CABLE IN CONDUIT | | | NOTES |
|---|---|---|---|---|---|---|---|---|---|---|---|
| | | | | POWER | NEUTRAL | GROUND | CONTROL | CONTROL | INSTRUMENTATION | CABLE NO | |
| 161 | VFD1 | CP3 | 1 | | | #14 | 12#14 | | | | |
| 162 | CP5 | STC5 | 1 1/4 | | | | | | 1-TYPE 3, 8 PAIR | | |
| 163 | CP5 | STC5 | 1 1/4 | | | | | 1-TYPE 1,12/C | | | |
| 164 | STC5 | CP4 | 2 | | | | | 1-TYPE 1,25/C | | | |
| 165 | CHLORINATOR ROOM LEAK DETECTOR | STC5 | 3/4 | | | #14 | 2#14 | | | | |
| 166 | CHLORINE STORAGE LEAK DETECTOR | STC5 | 3/4 | | | #14 | 2#14 | | | | |
| 167 | SULFONATOR ROOM LEAK DETECTOR | STC5 | 3/4 | | | #14 | 2#14 | | | | |
| 168 | $SO_2$ STORAGE ROOM LEAK DETECTOR | STC5 | 3/4 | | | #14 | 2#14 | | | | |
| 169 | RCA901, CLF901, CLF902 | STC5 | 1 | | | | | | 1-TYPE 3, 8 PAIR | | |
| 170 | RCA902, CLF903, CLF904 | STC5 | 1 | | | | | | 1-TYPE 3, 8 PAIR | | |
| 171 | SDF901, SDF902 | STC5 | 1 | | | | | | 1-TYPE 3, 8 PAIR | | |
| 172 | SDF903, SDF904 | STC5 | 1 | | | | | | 1-TYPE 3, 8 PAIR | | |
| 173 | STANDBY CHLORINE SCALE | STC5 | 3/4 | | | | | | 1-TYPE 2 | | |
| 174 | IN-SERVICE CHLORINE SCALE | STC5 | 3/4 | | | | | | 1-TYPE 2 | | |
| 175 | STANDBY $SO_2$ SCALE | STC5 | 3/4 | | | | | | 1-TYPE 2 | | |
| 176 | IN-SERVICE $SO_2$ SCALE | STC5 | 3/4 | | | | | | 1-TYPE 2 | | |
| 177 | PLANT WATER PUMP STARTERS | H5 | 1 | 3#8 | | #10 | | | | | |
| 178 | H5 | MU901 DISC SWITCH | 2 1/2 | 3#2/0 | | #6 | | | | | |
| 179 | MU901 DISC SWITCH | MU901 | 2 1/2 | 3#2/0 | | #6 | | | | | |
| 180 | H5 | MU902 DISC SWITCH | 2 | 3#1/0 | | #6 | | | | | |
| 181 | MU902 DISC SWITCH | MU902 | 2 | 3#1/0 | | #6 | | | | | |
| 182 | PLANT WATER PUMP STARTERS | CP5 | 1 | | 16#14 | #14 | | | | | 8#14 & #14 GND TO EACH STARTER |
| 183 | STC4 | CP4 | 2 | | | | | | 1-TYPE 3, 8 PAIR | | |
| 184 | FIT901 | STC5 | 3/4 | | | | | | 1-TYPE 2 | | |
| 185 | FIT902 | STC5 | 3/4 | | | | | | 1-TYPE 2 | | |
| 186 | CS14 | CP4 | 3/4 | | | #12 | 4#12 | | | | |
| 187 | V1034, FIT1001 | L4 | 3/4 | 2#12 | | #12 | | | | | |
| 188 | V1034, FIT1001 | CP4 | 1 | | | | | | 2-TYPE 2 | | |
| 189 | H4 | MU1001 DISC SWITCH | 1 1/4 | 3#4 | | #8 | | | | | |
| 190 | MU1001 DISC SWITCH | MU1001 | 1 1/4 | 3#4 | | #8 | | | | | |
| 191 | V1013, V1014, V1015 | CP4 | 2 | 2#12 | | #12 | 24#14 | | | | SEE VALVE ELEMENTARY CONTROL DIAGRAM |
| 192 | V1017, V1018, V1019 | CP4 | 2 | 2#12 | | #12 | 24#14 | | | | SEE VALVE ELEMENTARY CONTROL DIAGRAM |
| 193 | V1021, V1022, V1023 | CP4 | 2 | 2#12 | | #12 | 24#14 | | | | SEE VALVE ELEMENTARY CONTROL DIAGRAM |
| 194 | SCUM WELL FLOATS | SCUM PUMPS CONTROL PANEL | 3/4 | | | #14 | 6#14 | | | | CONTROL |
| 195 | CP6 | CP1 | 3/4 | | | #14 | 2#14 | | | | HW ALARM |
| 196 | FILTER PRESSURE SWITCHES | CP1 | 3/4 | | | #14 | 8#14 | | | | |
| 197 | FILTER PRESSURE SWITCHES | CP1 | 3/4 | | | #14 | 8#14 | | | | |
| 198 | BLOWER MOTOR STARTERS | CP1 | 1 | | | 3#14 | 18#14 | | | | 7 #14 TO EACH STARTER |
| 199 | BLOWER NO 1 CONTROL PANEL | MS1 | 3/4 | | | #14 | 2#12 6#14 | | | | 2 #12 FOR CT |
| 200 | BLOWER CONTROL PANEL | CP1 | 3/4 | | | #14 | 6#14 | | | | |
| 201 | BLOWER NO 2 CONTROL PANEL | MS2 | 3/4 | | | #14 | 2#12 6#14 | | | | 2 #12 FOR CT |

# CONDUIT, WIRE, AND CABLE SCHEDULE

| CONDUIT NO | ORIGIN | DESTINATION | CONDUIT | WIRE IN CONDUIT | | | | CABLE IN CONDUIT | | | NOTES |
|---|---|---|---|---|---|---|---|---|---|---|---|
| | | | | POWER | NEUTRAL | GROUND | CONTROL | CONTROL | INSTRUMENTATION | CABLE NO | |
| 202 | BLOWER NO 2 CONTROL PANEL | CP1 | 3/4 | | | #14 | 6#14 | | | | 2 #12 FOR CT |
| 203 | BLOWER NO 3 CONTROL PANEL | MS3 | 3/4 | | | #14 | 2#12 6#14 | | | | |
| 204 | BLOWER NO 3 CONTROL PANEL | CP1 | 3/4 | | | #14 | 6#14 | | | | |
| 205 | VALVE V780 | CP1 | 1 | | | | | | 2-TYPE 2 | | |
| 206 | FIT111 | CP1 | 3/4 | | | | | | 1-TYPE 2 | | |
| 207 | VALVE V796 | CP1 | 1 | | | | | | 2-TYPE 2 | | |
| 208 | PIT700 | CP1 | 3/4 | | | | | | 1-TYPE 2 | | |
| 209 | FIT110 | CP1 | 3/4 | | | | | | 1-TYPE 2 | | |
| 210 | VALVE V795 | CP1 | 1 | | | | | | 2-TYPE 2 | | |
| 211 | BLOWER MOTOR STARTERS | CP1 | 1 | | | | | | 2-TYPE 2 | | |
| 212 | MAIN SWITCHBOARD MSB1 | CP1 | 1 1/2 | | | | | | 7-TYPE 2 | | |
| 213 | AUTO TRANSFER SW ATS1 | CP1 | 3/4 | | | #14 | 4#14 | | | | |
| 214 | MCC1 | CP1 | 3 | | | | | | 5-TYPE 1, 12/C | | |
| 215 | GRIT UNIT SUMP PUMP | CP2 | 3/4 | | | #14 | 4#14 | | | | |
| 216 | DECANT FLOWMETER | CP4 | 3/4 | | | | | | 1-TYPE 2 | | |
| 217 | MCC4 | CP4 | 1 1/2 | | | #14 | 42#14 | | | | |
| 218 | MCC1 | CP1 | 2 | | | | | | 1-TYPE 3, 16 PR | | |
| 219 | V658, V663, V680 & V681 | CP1 | 1 1/2 | | | #14 | 36#14 | | | | 9#14 TO EACH VALVE |
| 220 | AIT701 | CP1 | 3/4 | | | | | | 1-TYPE 2 | | |
| 221 | AIT702 | CP1 | 3/4 | | | | | | 1-TYPE 2 | | |

HDR Engineering, Inc. of North Carolina

| Issue No. | Description | Date | Drwn. | Chkd. | Resp. Engr. | Proj. Mgr. |
|---|---|---|---|---|---|---|
| R | RECORD DRAWING | 6/97 | | | | |
| 0 | ISSUED FOR CONSTRUCTION | 5/19/94 | | | | |
| B | ISSUED FOR BIDS | 1/10/94 | | | | |
| A | ISSUED FOR APPROVAL | 6/15/93 | | | | |

NORTH CAROLINA PROFESSIONAL SEAL 5340 ENGINEER RICHARD C. MILLS 1/10/94

Project Manager: R. HAMILTON
Architect: G. GENRICH
I&C/Process: R. HAMILTON
Civil: K. MOSTELLER
Mechanical: D. DeBOER
Electrical: R. MILLS
Structural: N. CABLE
Drawn By: D. PETERSON

City of Hickory
Henry Fork WWTP
Expansion and Upgrade
Contract C - Electrical

Hickory North Carolina

Conduit, Wire, and Cable Schedules

Date: NOV 1993
Scale: NO SCALE
Project No.: 00231-012-018
Sheet No.: 1431
Issue: R

P:\HICKORY2\HF-1430

# I/O SUMMARY FOR RTU1 (LOCATED AT PROCESS BUILDING)

| POINT NO | TYPE DI | TYPE DO | TYPE AI | TYPE AO | TYPE P | DESCRIPTION | FUNCTION | INPUT FROM | OUTPUT TO | RANGE | NOTES |
|---|---|---|---|---|---|---|---|---|---|---|---|
| 1 | ● | | | | | BLOWER NO 1 | STATUS | MS1 | | | |
| 2 | ● | | | | | BLOWER NO 2 | STATUS | MS2 | | | |
| 3 | ● | | | | | BLOWER NO 3 | STATUS | MS3 | | | |
| 4 | | ● | | | | BLOWER NO 1 | CONTROL | | MS1 | | |
| 5 | | ● | | | | BLOWER NO 2 | CONTROL | | MS2 | | |
| 6 | | ● | | | | BLOWER NO 3 | CONTROL | | MS3 | | |
| 7 | | | ● | | | BLOWER NO 1 | AMPS | MS1 CURRENT XDCR | | 0-600 AMPS | |
| 8 | | | ● | | | BLOWER NO 2 | AMPS | MS2 CURRENT XDCR | | 0-600 AMPS | |
| 9 | | | ● | | | BLOWER NO 3 | AMPS | MS3 CURRENT XDCR | | 0-600 AMPS | |
| 10 | ● | | | | | BLOWER NO 1 | ALARM | | | | |
| 11 | ● | | | | | BLOWER NO 2 | ALARM | | | | |
| 12 | ● | | | | | BLOWER NO 3 | ALARM | | | | |
| 13 | | | ● | | | BLOWER HEADER PRESSURE | ANALOG DATA | PIT700 | | 0-10 PSIG | |
| 14 | | | ● | | | AERATION BASIN NO 1 DISSOLVED OXYGEN | ANALOG DATA | AIT701 | | 0-5 PPM | |
| 15 | | | ● | | | AERATION BASIN NO 2 DISSOLVED OXYGEN | ANALOG DATA | AIT702 | | 0-5 PPM | |
| 16 | | | ● | | | AERATION BASIN NO 1 AIRFLOW | ANALOG DATA | FIT110 | | 0-2000 SCFM | |
| 17 | | | ● | | | AERATION BASIN NO 2 AIRFLOW | ANALOG DATA | FIT111 | | 0-2000 SCFM | |
| 18 | | | | | | | | | | | |
| 19 | | | ● | | | BASIN NO 1 RAS/WAS FLOW | ANALOG DATA | FIT701 | | 0-10 MGD | |
| 20 | | | ● | | | BASIN NO 2 RAS/WAS FLOW | ANALOG DATA | FIT702 | | 0-10 MGD | |
| 21 | | | ● | | | BASIN NO 1 MLR FLOW | ANALOG DATA | FIT703 | | 0-10 MGD | |
| 22 | | | ● | | | BASIN NO 2 MLR FLOW | ANALOG DATA | FIT704 | | 0-10 MGD | |
| 23 | | | ● | | | BASIN NO 1 ANR FLOW | ANALOG DATA | FIT705 | | 0-10 MGD | |
| 24 | | | ● | | | BASIN NO 2 ANR FLOW | ANALOG DATA | FIT706 | | 0-10 MGD | |
| 25 | | | ● | | | ALUM TANK AST701 | ANALOG DATA | LIT701 | | 0-15 FT | |
| 26 | | | ● | | | ALUM TANK AST702 | ANALOG DATA | LIT702 | | 0-15 FT | |
| 27 | | | ● | | | ALUM TANK AST703 | ANALOG DATA | LIT703 | | 0-15 FT | |
| 28 | ● | | | | | ABM601 | STATUS | MOTOR STARTER | | | |
| 29 | ● | | | | | ABM602 | STATUS | MOTOR STARTER | | | |
| 30 | ● | | | | | ABM603 | STATUS | MOTOR STARTER | | | |
| 31 | ● | | | | | ABM604 | STATUS | MOTOR STARTER | | | |
| 32 | ● | | | | | ABM605 | STATUS | MOTOR STARTER | | | |
| 33 | ● | | | | | ABM606 | STATUS | MOTOR STARTER | | | |
| 34 | ● | | | | | ABM607 | STATUS | MOTOR STARTER | | | |
| 35 | ● | | | | | ABM608 | STATUS | MOTOR STARTER | | | |
| 36 | ● | | | | | ABM609 | STATUS | MOTOR STARTER | | | |
| 37 | ● | | | | | ABM610 | STATUS | MOTOR STARTER | | | |
| 38 | ● | | | | | ABM611 | STATUS | MOTOR STARTER | | | |
| 39 | ● | | | | | ABM612 | STATUS | MOTOR STARTER | | | |
| 40 | ● | | | | | P701 | SPEED | VFD | | 0-100% | |

# I/O SUMMARY FOR RTU1 (CONT)

| POINT NO | TYPE DI | TYPE DO | TYPE AI | TYPE AO | TYPE P | DESCRIPTION | FUNCTION | INPUT FROM | OUTPUT TO | RANGE | NOTES |
|---|---|---|---|---|---|---|---|---|---|---|---|
| 41 | | | ● | | | P702 | SPEED | VFD | | 0-100% | |
| 42 | | | ● | | | P703 | SPEED | VFD | | 0-100% | |
| 43 | | | ● | | | P709 | SPEED | VFD | | 0-100% | |
| 44 | | | ● | | | P710 | SPEED | VFD | | 0-100% | |
| 45 | | | ● | | | P711 | SPEED | VFD | | 0-100% | |
| 46 | | | ● | | | P705 | SPEED | VFD | | 0-100% | |
| 47 | | | ● | | | P706 | SPEED | VFD | | 0-100% | |
| 48 | | | ● | | | P707 | SPEED | VFD | | 0-100% | |
| 49 | ● | | | | | P713 | STATUS | MOTOR STARTER | | | |
| 50 | ● | | | | | P714 | STATUS | MOTOR STARTER | | | |
| 51 | ● | | | | | SBM613 | STATUS | MOTOR STARTER | | | |
| 52 | ● | | | | | SBM614 | STATUS | MOTOR STARTER | | | |
| 53 | ● | | | | | SECONDARY CLARIFIER NO 1 | STATUS | MOTOR STARTER | | | |
| 54 | ● | | | | | SECONDARY CLARIFIER NO 1 | OVERLOAD ALARM | CLARIFIER CONTROL PANEL | | | |
| 55 | ● | | | | | SECONDARY CLARIFIER NO 2 | STATUS | MOTOR STARTER | | | |
| 56 | ● | | | | | SECONDARY CLARIFIER NO 2 | OVERLOAD ALARM | CLARIFIER CONTROL PANEL | | | |
| 57 | ● | | | | | P601 | STATUS | MOTOR STARTER | | | |
| 58 | ● | | | | | P602 | STATUS | MOTOR STARTER | | | |
| 59 | ● | | | | | BLOWER INLET FILTER NO 1 | ALARM | FILTER PS | | | |
| 60 | ● | | | | | BLOWER INLET FILTER NO 1 STAGE 1 | ALARM | FILTER PS | | | |
| 61 | ● | | | | | BLOWER INLET FILTER NO 1 STAGE 2 | ALARM | FILTER PS | | | |
| 62 | ● | | | | | BLOWER INLET FILTER NO 1 STAGE 3 | ALARM | FILTER PS | | | |
| 63 | ● | | | | | BLOWER INLET FILTER NO 2 | ALARM | FILTER PS | | | |
| 64 | ● | | | | | BLOWER INLET FILTER NO 2 STAGE 1 | ALARM | FILTER PS | | | |
| 65 | ● | | | | | BLOWER INLET FILTER NO 2 STAGE 2 | ALARM | FILTER PS | | | |
| 66 | ● | | | | | BLOWER INLET FILTER NO 2 STAGE 3 | ALARM | FILTER PS | | | |
| 67 | ● | | | | | SCUM WELL LEVEL | ALARM | CP6 | | | |
| 68 | | | ● | | | MSBI INCOMING LINE | ØA VOLTAGE | ØA VOLTAGE XDUCER | | 0-600V | |
| 69 | | | ● | | | MSBI INCOMING LINE | ØB VOLTAGE | ØB VOLTAGE XDUCER | | 0-600V | |
| 70 | | | ● | | | MSBI INCOMING LINE | ØC VOLTAGE | ØC VOLTAGE XDUCER | | 0-600V | |
| 71 | | | ● | | | MSBI INCOMING LINE | ØA CURRENT | ØA CURRENT XDUCER | | 0-2000A | |
| 72 | | | ● | | | MSBI INCOMING LINE | ØB CURRENT | ØB CURRENT XDUCER | | 0-2000A | |
| 73 | | | ● | | | MSBI INCOMING LINE | ØC CURRENT | ØC CURRENT XDUCER | | 0-2000A | |
| 74 | | | ● | | | MSBI INCOMING LINE | 3Ø KW | KW XDUCER | | 0-1500KW | |
| 75 | ● | | | | | AUTOMATIC TRANSFER SWITCH ATS1 | POSITION INDICATOR | ASTI | | | |
| 76 | ● | | | | | 1000 KW GENSET | STATUS | GENSET C.P. | | | |
| 77 | ● | | | | | 1000 KW GENSET | ALARM | GENSET C.P. | | | |
| 78 | | ● | | | | V663 | CONTROL, OPEN | | V663 | | |
| 79 | | ● | | | | V663 | CONTROL, OPEN | | V663 | | |
| 80 | ● | | | | | V663 | STATUS, OPEN | V663 | | | |

DI - DISCRETE INPUT
DO - DISCRETE OUTPUT
AI - ANALOG INPUT
AO - ANALOG OUTPUT
P - PULSE INPUT/OUTPUT

HDR Engineering, Inc. of North Carolina

| Issue No. | Description | Date | Drwn. | Chkd. | Resp. Engr. | Proj. Mgr. |
|---|---|---|---|---|---|---|
| R | RECORD DRAWING | 6/97 | | | | |
| 0 | ISSUED FOR CONSTRUCTION | 5/19/94 | | | | |
| B | ISSUED FOR BIDS | 1/10/94 | | | | |
| A | ISSUED FOR APPROVAL | 6/15/93 | | | | |

NORTH CAROLINA PROFESSIONAL SEAL 5340 ENGINEER RICHARD C. MILLS
1/10/94

Project Manager: R. HAMILTON
Architect: G. GENRICH
Civil: K. MOSTELLER
Electrical: R. MILLS
I&C/Process: R. HAMILTON
Mechanical: D. DeBOER
Structural: N. CABLE
Drawn By: D. PETERSON

Hickory

# City of Hickory
## Henry Fork WWTP
## Expansion and Upgrade
## Contract C - Electrical

North Carolina

## I/O Summary

| Date | Project No. | Sheet No. | Issue |
|---|---|---|---|
| NOV 1993 | 00231-012-018 | 1432 | R |

Scale: NO SCALE

P:\HICKORY2\HF-1432

## I/O SUMMARY FOR RTU1 (CONT)

| POINT NO | TYPE DI | DO | AI | AO | P | DESCRIPTION | FUNCTION | INPUT FROM | OUTPUT TO | RANGE | NOTES |
|---|---|---|---|---|---|---|---|---|---|---|---|
| 81 | ● | | | | | V663 | STATUS, CLOSED | V663 | | | |
| 82 | | ● | | | | V681 | CONTROL, OPEN | | V681 | | |
| 83 | | ● | | | | V681 | CONTROL, CLOSED | | V681 | | |
| 84 | ● | | | | | V681 | STATUS, OPEN | V681 | | | |
| 85 | ● | | | | | V681 | STATUS, CLOSED | V681 | | | |
| 86 | | ● | | | | V658 | CONTROL, OPEN | | V658 | | |
| 87 | | ● | | | | V658 | CONTROL, CLOSED | | V658 | | |
| 88 | ● | | | | | V658 | STATUS, OPEN | V658 | | | |
| 89 | ● | | | | | V658 | STATUS, CLOSED | V658 | | | |
| 90 | | ● | | | | V680 | CONTROL, OPEN | | V680 | | |
| 91 | | ● | | | | V680 | CONTROL, CLOSED | | V680 | | |
| 82 | ● | | | | | V680 | STATUS, OPEN | V680 | | | |
| 93 | ● | | | | | V680 | STATUS, CLOSED | V680 | | | |

## I/O SUMMARY FOR RTU2 (LOCATED AT GRIT REMOVAL UNIT)

| POINT NO | TYPE DI | DO | AI | AO | P | DESCRIPTION | FUNCTION | INPUT FROM | OUTPUT TO | RANGE | NOTES |
|---|---|---|---|---|---|---|---|---|---|---|---|
| 1 | | ● | | | | EQUALIZATION BASIN AERATOR FSA501 | CONTROL | | MOTOR STARTER | | |
| 2 | | ● | | | | EQUALIZATION BASIN AERATOR FSA502 | CONTROL | | MOTOR STARTER | | |
| 3 | | ● | | | | EQUALIZATION BASIN AERATOR FSA503 | CONTROL | | MOTOR STARTER | | |
| 4 | | ● | | | | EQUALIZATION BASIN AERATOR FSA504 | CONTROL | | MOTOR STARTER | | |
| 5 | | ● | | | | EQUALIZATION BASIN AERATOR FSA505 | CONTROL | | MOTOR STARTER | | |
| 6 | | ● | | | | EQUALIZATION BASIN AERATOR FSA506 | CONTROL | | MOTOR STARTER | | |
| 7 | ● | | | | | EQUALIZATION BASIN AERATOR FSA501 | STATUS | MOTOR STARTER AUX CONTACT | | | |
| 8 | ● | | | | | EQUALIZATION BASIN AERATOR FSA502 | STATUS | MOTOR STARTER AUX CONTACT | | | |
| 9 | ● | | | | | EQUALIZATION BASIN AERATOR FSA503 | STATUS | MOTOR STARTER AUX CONTACT | | | |
| 10 | ● | | | | | EQUALIZATION BASIN AERATOR FSA504 | STATUS | MOTOR STARTER AUX CONTACT | | | |
| 11 | ● | | | | | EQUALIZATION BASIN AERATOR FSA505 | STATUS | MOTOR STARTER AUX CONTACT | | | |
| 12 | ● | | | | | EQUALIZATION BASIN AERATOR FSA506 | STATUS | MOTOR STARTER AUX CONTACT | | | |
| 13 | | | | ● | | EQUALIZATION BASIN EFFLUENT CONTROL VALVE V502 | POSITION CONTROL | | VALVE OPERATOR | 0–100% | |
| 14 | | | ● | | | EQUALIZATION BASIN EFFLUENT CONTROL VALVE V502 | POSITION INDICATION | POSITION XMTR IN VALVE OPERATOR | | 0–100% | |
| 15 | | | ● | | | EQUALIZATION BASIN EFFLUENT FLOW | AERATOR START/STOP CONTROL | FIT501 | | 0–20 MGD | |
| 16 | | | ● | | | EQUALIZATION BASIN LEVEL | AERATOR START/STOP CONTROL | LIT501 | | 0–20 FT | |
| 17 | ● | | | | | GRIT PUMP P401 | STATUS | MOTOR STARTER | | | |
| 18 | ● | | | | | GRIT PUMP P402 | STATUS | MOTOR STARTER | | | |
| 19 | ● | | | | | GRIT WASHER GW401 | STATUS | MOTOR STARTER | | | |
| 20 | ● | | | | | GRIT PUMP P401 DISCHARGE VALVE V403 | OPEN STATUS | VALVE LIMIT SWITCH | | | |
| 21 | ● | | | | | GRIT PUMP P401 DISCHARGE VALVE V403 | CLOSED STATUS | VALVE LIMIT SWITCH | | | |
| 22 | ● | | | | | GRIT PUMP P402 DISCHARGE VALVE V404 | OPEN STATUS | VALVE LIMIT SWITCH | | | |
| 23 | ● | | | | | GRIT PUMP P402 DISCHARGE VALVE V404 | CLOSED STATUS | VALVE LIMIT SWITCH | | | |
| 24 | ● | | | | | GRIT REMOVAL UNIT | STATUS | GRIT UNIT CONTROL PANEL | | | |
| 25 | ● | | | | | GRIT REMOVAL UNIT | ALARM | GRIT UNIT CONTROL PANEL | | | |
| 26 | ● | | | | | GRIT REMOVAL UNIT SUMP | HIGH LEVEL ALARM | SUMP PUMP CONTROL PANEL | | | |

## I/O SUMMARY FOR RTU3 (LOCATED AT RAW SEWAGE PUMP STATION)

| POINT NO | TYPE DI | DO | AI | AO | P | DESCRIPTION | FUNCTION | INPUT FROM | OUTPUT TO | RANGE | NOTES |
|---|---|---|---|---|---|---|---|---|---|---|---|
| 1 | | | ● | | | WET WELL LEVEL | CONTROL RAW SEWAGE PUMPS | LT301 | | 0–20 FT | |
| 2 | | | | ● | | RAW SEWAGE PUMP NO 1 | SPEED CONTROL | | PUMP NO 1 VFD | 0–100% MOTOR NAMPLATE | |
| 3 | | | | ● | | RAW SEWAGE PUMP NO 2 | SPEED CONTROL | | PUMP NO 2 VFD | 0–100% MOTOR NAMPLATE | |
| 4 | | | | ● | | RAW SEWAGE PUMP NO 3 | SPEED CONTROL | | PUMP NO 3 VFD | 0–100% MOTOR NAMPLATE | |
| 5 | | | | ● | | RAW SEWAGE PUMP NO 4 | SPEED CONTROL | | PUMP NO 4 VFD | 0–100% MOTOR NAMPLATE | |
| 6 | | ● | | | | RTU3 FAIL | TRANSFER TO BACKUP CONTROLS | | RELAY TDF | | |
| 7 | | ● | | | | RAW SEWAGE PUMP NO 1 | ENABLE FIXED SPEED CONTROL | | RELAY 7TX | | |
| 8 | | ● | | | | RAW SEWAGE PUMP NO 2 | ENABLE FIXED SPEED CONTROL | | RELAY 8TX | | |
| 9 | | ● | | | | RAW SEWAGE PUMP NO 3 | ENABLE FIXED SPEED CONTROL | | RELAY 9TX | | |
| 10 | | ● | | | | RAW SEWAGE PUMP NO 4 | ENABLE FIXED SPEED CONTROL | | RELAY 10TX | | |
| 11 | | ● | | | | WET WELL LEVEL HIGH | ALARM | | PL1 | | |
| 12 | | | ● | | | RAW SEWAGE PUMP NO 1 | SPEED INDICATION | PUMP NO 1 VFD | | | |
| 13 | | | ● | | | RAW SEWAGE PUMP NO 2 | SPEED INDICATION | PUMP NO 2 VFD | | | |
| 14 | | | ● | | | RAW SEWAGE PUMP NO 3 | SPEED INDICATION | PUMP NO 3 VFD | | | |
| 15 | | | ● | | | RAW SEWAGE PUMP NO 4 | SPEED INDICATION | PUMP NO 4 VFD | | | |
| 16 | | ● | | | | RAW SEWAGE PUMP NO 1 | CONTROL | | MOTOR CONTROLLER | | |
| 17 | ● | | | | | RAW SEWAGE PUMP NO 1 | STATUS | MOTOR CONTROLLER | | | |
| 18 | | ● | | | | RAW SEWAGE PUMP NO 2 | CONTROL | | MOTOR CONTROLLER | | |
| 19 | ● | | | | | RAW SEWAGE PUMP NO 2 | STATUS | MOTOR CONTROLLER | | | |
| 20 | | ● | | | | RAW SEWAGE PUMP NO 3 | | | MOTOR CONTROLLER | | |
| 21 | ● | | | | | RAW SEWAGE PUMP NO 3 | STATUS | MOTOR CONTROLLER | | | |
| 22 | | ● | | | | RAW SEWAGE PUMP NO 4 | | | MOTOR CONTROLLER | | |
| 23 | ● | | | | | RAW SEWAGE PUMP NO 4 | STATUS | | | | |
| 24 | ● | | | | | PUMP NO 1 VFD | FAIL ALARM | PUMP NO 1 VFD | | | |
| 25 | ● | | | | | PUMP NO 2 VFD | FAIL ALARM | PUMP NO 2 VFD | | | |
| 26 | ● | | | | | PUMP NO 3 VFD | FAIL ALARM | PUMP NO 3 VFD | | | |
| 27 | ● | | | | | PUMP NO 4 VFD | FAIL ALARM | PUMP NO 4 VFD | | | |
| 28 | | | ● | | | PUMPS NO 1 AND NO 2 FLOWMETER | FLOW | FIT301 | | 0–20 MGD | |
| 29 | | | ● | | | PUMPS NO 3 AND NO 4 FLOWMETER | FLOW | FIT302 | | 0–20 MGD | |
| 30 | ● | | | | | RAW SEWAGE PUMP STATION DRYWELL FLOOD | ALARM | FLOOD DETECTOR | | | |
| 31 | ● | | | | | BARSCREEN NO 1 | STATUS | BARSCREEN NO. 1 C.P. | | | |
| 32 | ● | | | | | BARSCREEN NO 2 | STATUS | BARSCREEN NO. 2 C.P. | | | |
| 33 | ● | | | | | BARSCREEN NO 1 HIGH WATER DIFF | ALARM | BARSCREEN NO. 1 C.P. | | | |
| 34 | ● | | | | | BARSCREEN NO 2 HIGH WATER DIFF | ALARM | BARSCREEN NO. 2 C.P. | | | |
| 35 | ● | | | | | SCREENINGS CONVEYOR | STATUS | BARSCREEN NO. 2 C.P. | | | |
| 36 | ● | | | | | RAW SEWAGE PUMP STATION SUMP | HIGH LEVEL ALARM | SUMP PUMPS CONTROL PANEL | | | |
| 37 | | | ● | | | MSB2 INCOMING LINE | øA VOLTAGE | øA VOLT XDUCER | | 0–600V | |
| 38 | | | ● | | | MSB2 INCOMING LINE | øB VOLTAGE | øB VOLT XDUCER | | 0–600V | |
| 39 | | | ● | | | MSB2 INCOMING LINE | øC VOLTAGE | øC VOLT XDUCER | | 0–600V | |
| 40 | | | ● | | | MSB2 INCOMING LINE | øA CURRENT | øA CURRENT XDUCER | | 0–2000A | |
| 41 | | | ● | | | MSB2 INCOMING LINE | øB CURRENT | øB CURRENT XDUCER | | 0–2000A | |
| 42 | | | ● | | | MSB2 INCOMING LINE | øC CURRENT | øC CURRENT XDUCER | | 0–2000A | |
| 43 | | | ● | | | MSB2 INCOMING LINE | 3ø KW | KW XDUCER | | 0–1500 KW | |
| 44 | ● | | | | | AUTOMATIC TRANSFER SWITCH ATS2 | POSITION INDICATION | ATS2 | | | |

DI – DISCRETE INPUT
DO – DISCRETE OUTPUT
AI – ANALOG INPUT
AO – ANALOG OUTPUT
P – PULSE INPUT/OUTPUT

HDR

HDR Engineering, Inc. of North Carolina

| Issue No. | Description | Date | Drwn. | Chkd. | Resp. Engr. | Proj. Mgr. |
|---|---|---|---|---|---|---|
| R | RECORD DRAWING | 6/97 | | | | |
| 0 | ISSUED FOR CONSTRUCTION | 5/19/94 | | | | |
| B | ISSUED FOR BIDS | 1/10/94 | | | | |
| A | ISSUED FOR APPROVAL | 6/15/93 | | | | |

NORTH CAROLINA PROFESSIONAL SEAL 5340 ENGINEER RICHARD C. MILLS
1/10/94

Project Manager: R. HAMILTON
Architect: G. GENRICH
I&C/Process: R. HAMILTON
Civil: K. MOSTELLER
Mechanical: D. DeBOER
Electrical: R. MILLS
Structural: N. CABLE
Drawn By: D. PETERSON

# City of Hickory
## Henry Fork WWTP
## Expansion and Upgrade
## Contract C - Electrical

Hickory North Carolina

## I/O Summary

Date: NOV 1993
Scale: NO SCALE
Project No.: 00231-012-018
Sheet No.: 1433
Issue: R

P:\HICKORY2\HF-1433

# I/O SUMMARY FOR RTU4 (LOCATED IN SLUDGE PUMP STATION)

| POINT NO | TYPE DI | TYPE DO | TYPE AI | TYPE AO | TYPE P | DESCRIPTION | FUNCTION | INPUT FROM | OUTPUT TO | RANGE | NOTES |
|---|---|---|---|---|---|---|---|---|---|---|---|
| 1 | ● | | | | | PLANT WATER PUMP P101 | STATUS | MOTOR STARTER AUX CONTACT | | | |
| 2 | ● | | | | | PLANT WATER PUMP P102 | STATUS | MOTOR STARTER AUX CONTACT | | | |
| 3 | | | | | | | | | | | |
| 4 | | | | | | | | | | | |
| 5 | ● | | | | | PLANT WATER PUMP P101 HIGH TEMP | ALARM | TEMP SWITCH IN MOTOR | | | |
| 6 | ● | | | | | PLANT WATER PUMP P102 HIGH TEMP | ALARM | TEMP SWITCH IN MOTOR | | | |
| 7 | | | ● | | | PLANT WATER TANK | PRESSURE | PT901 | | 0–100 PSIG | |
| 8 | | | ● | | | PLANT WATER TANK | LEVEL | LT901 | | 0–4 FT | |
| 9 | | | ● | | | DECANT FLOW | FLOW | DECANT FLOWMETER | | 0–900 GPM | |
| 10 | | | ● | | | WAS TANK AIR FLOW TRANSMITTER | FLOW | FIT1001 | | | |
| 11 | | | | | ● | DECANT FLOW | FLOW TOTAL | | TOTALIZER FQ1001 | | |
| 12 | | ● | | | | TANK LEVEL | LOW LEVEL CUTOFF | | RELAY SPR | | |
| 13 | ● | | | | | P1003 | STATUS | MOTOR STARTER | | | |
| 14 | ● | | | | | P1004 | STATUS | MOTOR STARTER | | | |
| 15 | ● | | | | | P1001 | STATUS | MOTOR STARTER | | | |
| 16 | ● | | | | | P1002 | STATUS | MOTOR STARTER | | | |
| 17 | ● | | | | | P1005 | STATUS | MOTOR STARTER | | | |
| 18 | ● | | | | | P1006 | STATUS | MOTOR STARTER | | | |
| 19 | ● | | | | | MX1001 | STATUS | MOTOR STARTER | | | |
| 20 | ● | | | | | MX1002 | STATUS | MOTOR STARTER | | | |
| 21 | ● | | | | | V1013 | OPEN STATUS | VALVE OPERATOR | | | |
| 22 | ● | | | | | V1013 | CLOSED STATUS | VALVE OPERATOR | | | |
| 23 | | ● | | | | V1013 | OPEN CONTROL | | VALVE OPERATOR | | |
| 24 | | ● | | | | V1013 | CLOSE CONTROL | | VALVE OPERATOR | | |
| 25 | ● | | | | | V1014 | OPEN STATUS | VALVE OPERATOR | | | |
| 26 | ● | | | | | V1014 | CLOSED STATUS | VALVE OPERATOR | | | |
| 27 | | ● | | | | V1014 | OPEN CONTROL | | VALVE OPERATOR | | |
| 28 | | ● | | | | V1014 | CLOSE CONTROL | | VALVE OPERATOR | | |
| 29 | ● | | | | | V1015 | OPEN STATUS | VALVE OPERATOR | | | |
| 30 | ● | | | | | V1015 | CLOSED STATUS | VALVE OPERATOR | | | |
| 31 | | ● | | | | V1015 | OPEN CONTROL | | VALVE OPERATOR | | |
| 32 | | ● | | | | V1015 | CLOSE CONTROL | | VALVE OPERATOR | | |
| 33 | ● | | | | | V1017 | OPEN STATUS | VALVE OPERATOR | | | |
| 34 | ● | | | | | V1017 | CLOSED STATUS | VALVE OPERATOR | | | |
| 35 | | ● | | | | V1017 | OPEN CONTROL | | VALVE OPERATOR | | |
| 36 | | ● | | | | V1017 | CLOSE CONTROL | | VALVE OPERATOR | | |
| 37 | ● | | | | | V1018 | OPEN STATUS | VALVE OPERATOR | | | |

# I/O SUMMARY FOR RTU4 (CONT)

| POINT NO | TYPE DI | TYPE DO | TYPE AI | TYPE AO | TYPE P | DESCRIPTION | FUNCTION | INPUT FROM | OUTPUT TO | RANGE | NOTES |
|---|---|---|---|---|---|---|---|---|---|---|---|
| 38 | ● | | | | | V1018 | CLOSED STATUS | VALVE OPERATOR | | | |
| 39 | | ● | | | | V1018 | OPEN CONTROL | | VALVE OPERATOR | | |
| 40 | | ● | | | | V1018 | CLOSE CONTROL | | VALVE OPERATOR | | |
| 41 | ● | | | | | V1019 | OPEN STATUS | VALVE OPERATOR | | | |
| 42 | ● | | | | | V1019 | CLOSED STATUS | VALVE OPERATOR | | | |
| 43 | | ● | | | | V1019 | OPEN CONTROL | | VALVE OPERATOR | | |
| 44 | | ● | | | | V1019 | CLOSE CONTROL | | VALVE OPERATOR | | |
| 45 | ● | | | | | V1021 | OPEN STATUS | VALVE OPERATOR | | | |
| 46 | ● | | | | | V1021 | CLOSED STATUS | VALVE OPERATOR | | | |
| 47 | | ● | | | | V1021 | OPEN CONTROL | | VALVE OPERATOR | | |
| 48 | | ● | | | | V1021 | CLOSE CONTROL | | VALVE OPERATOR | | |
| 49 | ● | | | | | V1022 | OPEN STATUS | VALVE OPERATOR | | | |
| 50 | ● | | | | | V1022 | CLOSED STATUS | VALVE OPERATOR | | | |
| 51 | | ● | | | | V1022 | OPEN CONTROL | | VALVE OPERATOR | | |
| 52 | | ● | | | | V1022 | CLOSE CONTROL | | VALVE OPERATOR | | |
| 53 | ● | | | | | V1023 | OPEN STATUS | VALVE OPERATOR | | | |
| 54 | ● | | | | | V1023 | CLOSED STATUS | VALVE OPERATOR | | | |
| 55 | | ● | | | | V1023 | OPEN CONTROL | | VALVE OPERATOR | | |
| 56 | | ● | | | | V1023 | CLOSE CONTROL | | VALVE OPERATOR | | |
| 57 | | | | | | | | | | | |
| 58 | | ● | | | | P1001 | CONTROL | | MOTOR STARTER | | |
| 59 | | ● | | | | P1002 | CONTROL | | MOTOR STARTER | | |
| 60 | | ● | | | | MX1001 | CONTROL | | MOTOR STARTER | | |
| 61 | | ● | | | | MX1002 | CONTROL | | MOTOR STARTER | | |
| 62 | | ● | | | | WAS DECANT AUTO CYCLE IN PROGRESS | INDICATE | | PILOT LIGHT | | |
| 63 | | | | | | | | | | | |
| 64 | | | | | | | | | | | |
| 65 | | | | | | | | | | | |
| 66 | | | ● | | | THICKENED SLUDGE TANK | LEVEL | LT1001 | | 0–20 FT | |
| 67 | | | ● | | | WAS TANK NO 1 | LEVEL | LT1002 | | 0–20 FT | |
| 68 | | | ● | | | WAS TANK NO 2 | LEVEL | LT1003 | | 0–20 FT | |
| 69 | ● | | | | | THICKENED SLUDGE DECANT CYCLE | START | PB1 | | | |
| 70 | ● | | | | | THICKENED SLUDGE DECANT CYCLE | STOP | PB2 | | | |
| 71 | ● | | | | | WAS DECANT CYCLE | START | PB3 | | | |
| 72 | ● | | | | | WAS DECANT CYCLE | STOP | PB4 | | | |
| 73 | | | | ● | | DECANT FLOW | INDICATOR | | FI1001 | | |

DI – DISCRETE INPUT
DO – DISCRETE OUTPUT
AI – ANALOG INPUT
AO – ANALOG OUTPUT
P – PULSE INPUT/OUTPUT

HDR Engineering, Inc. of North Carolina

| Issue No. | Description | Date | Drwn. | Chkd. | Resp. Engr. | Proj. Mgr. |
|---|---|---|---|---|---|---|
| R | RECORD DRAWING | 6/97 | | | | |
| 0 | ISSUED FOR CONSTRUCTION | 5/19/94 | | | | |
| B | ISSUED FOR BIDS | 1/10/94 | | | | |
| A | ISSUED FOR APPROVAL | 6/15/93 | | | | |

NORTH CAROLINA PROFESSIONAL SEAL 5340 ENGINEER RICHARD C. MILLS 1/10/94

Project Manager: R. HAMILTON
Architect: G. GENRICH
Civil: K. MOSTELLER
Electrical: R. MILLS
I&C/Process: R. HAMILTON
Mechanical: D. DeBOER
Structural: N. CABLE
Drawn By: D. PETERSON

City of Hickory
Henry Fork WWTP
Expansion and Upgrade
Contract C – Electrical
Hickory North Carolina

I/O Summary

Date: NOV 1993
Scale: NO SCALE
Project No.: 00231-012-018
Sheet No.: 1434
Issue: R

P:\HICKORY2\HF-1434

# I/O SUMMARY FOR RTU4 (CONT)

| POINT NO | TYPE DI | DO | AI | AO | P | DESCRIPTION | FUNCTION | INPUT FROM | OUTPUT TO | RANGE | NOTES |
|---|---|---|---|---|---|---|---|---|---|---|---|
| 74 | ● | | | | | THICKENED SLUDGE PUMP NO 1 | SELECTED | RELAY SELX1 | | | |
| 75 | ● | | | | | THICKENED SLUDGE PUMP NO 2 | SELECTED | RELAY SELX2 | | | |
| 76 | ● | | | | | WAS PUMP NO 1 | SELECTED | RELAY SELX3 | | | |
| 77 | ● | | | | | WAS PUMP NO 2 | SELECTED | RELAY SELX4 | | | |
| 78 | | | ● | | | EFFLUENT FLOW (NORTH BASIN) | ANALOG DATA | FIT901 | | 0-30MGD | |
| 79 | | | ● | | | EFFLUENT FLOW (SOUTH BASIN) | ANALOG DATA | FIT902 | | 0-30MGD | |
| 80 | | | ● | | | CHLORINE RESIDUAL (NORTH) | ANALOG DATA | RCA901 | | | |
| 81 | | | ● | | | CHLORINE RESIDUAL (SOUTH) | ANALOG DATA | RCA902 | | | |
| 82 | | | ● | | | IN-SERVICE CHLORINE CYLINDER | WEIGHT | SCALE WEIGHT XMTR | | | |
| 83 | | | ● | | | STANDBY CHLORINE CYLINDER | WEIGHT | SCALE WEIGHT XMTR | | | |
| 84 | | | ● | | | IN-SERVICE $SO_2$ CYLINDER | WEIGHT | SCALE WEIGHT XMTR | | | |
| 85 | | | ● | | | STANDBY $SO_2$ CYLINDER | WEIGHT | SCALE WEIGHT XMTR | | | |
| 86 | ● | | | | | CHLORINATOR ROOM CHLORINE LEAK | ALARM | LEAK DETECTOR | | | |
| 87 | ● | | | | | CHLORINE STORAGE ROOM CHLORINE LEAK | ALARM | LEAK DETECTOR | | | |
| 88 | ● | | | | | SULFONATOR ROOM $SO_2$ LEAK | ALARM | LEAK DETECTOR | | | |
| 89 | ● | | | | | $SO_2$ STORAGE ROOM $SO_2$ LEAK | ALARM | LEAK DETECTOR | | | |
| 90 | | ● | | | | THICKENED SLUDGE DECANT AUTO CYCLE IN PROGRESS | INDICATION | | PILOT LIGHT | | |
| 91 | ● | | | | | CLARKE PUMP STATION | HIGH WATER ALARM | EXIST. TELEMETRY | | | |
| 92 | ● | | | | | CLARKE PUMP STATION | GENERATOR STATUS | EXIST. TELEMETRY | | | |
| 93 | ● | | | | | SOUTHEAST PUMP STATION | HIGH WATER ALARM | EXIST. TELEMETRY | | | |
| 94 | ● | | | | | SOUTHEAST PUMP STATION | GENERATOR STATUS | EXIST. TELEMETRY | | | |

HDR

HDR Engineering, Inc. of North Carolina

| Issue No. | Description | Date | Drwn. | Chkd. | Resp. Engr. | Proj. Mgr. |
|---|---|---|---|---|---|---|
| R | RECORD DRAWING | 6/97 | | | | |
| 0 | ISSUED FOR CONSTRUCTION | 5/19/94 | | | | |
| B | ISSUED FOR BIDS | 1/10/94 | | | | |
| A | ISSUED FOR APPROVAL | 6/15/93 | | | | |

NORTH CAROLINA PROFESSIONAL SEAL 5340 ENGINEER RICHARD C. MILLS 1/10/94

Project Manager: R. HAMILTON
Architect: G. GENRICH
I&C/Process: R. HAMILTON
Civil: K. MOSTELLER
Mechanical: D. DeBOER
Electrical: R. MILLS
Structural: N. CABLE
Drawn By: D. PETERSON

Hickory

City of Hickory
Henry Fork WWTP
Expansion and Upgrade
Contract C - Electrical

North Carolina

I/O Summary

Date: NOV 1993
Scale: NO SCALE
Project No.: 00231-012-018
Sheet No.: 1435
Issue: R

P:\HICKORY2\HF-1435

## SYMBOLS APPLICABLE TO ALL DRAWINGS

FIELD DEVICE–SYMBOL SIZE DEPENDENT UPON DRAWING SCALE AND/OR EQUIPMENT SIZE
"X" INDICATES DEVICE TYPE, REFER TO ELECTRICAL LEGEND FOR DESCRIPTION

SAFETY SWITCH
NO SUBSCRIPT INDICATES 30 AMP, 3 POLE, NON–FUSED SWITCH
"X" INDICATES SWITCH TYPE AND RATING
"60/3"–60 AMP, 3 POLE, NON–FUSED
"60/3/40"–60 AMP, 3 POLE, WITH 40 AMP FUSE
"Y" INDICATES ENCLOSURE TYPE

MAGNETIC STARTER
"A" INDICATES NEMA SIZE
"B" INDICATES INDICATING LIGHTS IF REQUIRED
NO SUBSCRIPT INDICATES 2 LIGHTS RUN AND STOP
"Y" INDICATES NUMBER OF LIGHTS AND FUNCTION
"R,OL" INDICATES 2 LIGHTS, RUN AND OVERLOAD
"C" INDICATES OPERATORS DEVICES IF REQUIRED
NO SUBSCRIPT INDICATES 3 POSITION H–O–A
0–0 INDICATES 2 POSITION ON–OFF
"Z" INDICATES NUMBER OF POSITIONS AND FUNCTIONS
NOTE: OPERATORS DEVICES AND INDICATING LIGHT REQUIREMENTS MAY BE SHOWN ON EITHER THE ONE–LINE DIAGRAM OR THE INSTRUMENTATION DRAWINGS, OR BOTH IN COMBINATION.
"D" INDICATES STARTER TYPE
NO SUBSCRIPT INDICATES FULL VOLTAGE NON–REVERSING
FVR–FULL VOLTAGE REVERSING
RV–REDUCED VOLTAGE START
2S–TWO–SPEED

FUSE
FUSE CURRENT RATING AND NUMBER OF FUSES AS SHOWN. IN GENERAL, CURRENT RATING AND QUANTITY ARE NOT SHOWN FOR CONTROL CIRCUITS OR WHERE THE FUSE IS AN INTEGRAL PART OF THE EQUIPMENT – SUCH AS FUSING OF A VOLTAGE TRANSFORMER

DISCONNECT SWITCH – SINGLE POLE

TRANSFER SWITCH
"X" INDICATES SWITCH TYPE, REFER TO ELECTRICAL LEGEND FOR DESCRIPTION

CIRCUIT BREAKER
TRIP SETTING, FRAME SIZE, NO. OF POLES AS SHOWN. NOTE THAT FRAME SIZE IS NOT NECCESSARILY SHOWN WHEN THE SELECTION IS OBVIOUS. IN GENERAL, CURRENT RATING, FRAME SIZE, AND NO. OF POLES IS NOT SHOWN WHEN THE CIRCUIT BREAKER IS AN INTEGRAL PART OF THE EQUIPMENT – SUCH AS A COMBINATION MAGNETIC STARTER

TRANSFORMER
Δ DELTA CONNECTION
Y WYE CONNECTION
GRD. WYE CONNECTION
∠ OPEN DELTA CONNECTION
GRD. WYE CONNECTION WITH GROUND RESISTOR
Δ BROKEN DELTA CONNECTION

ELECTRIC MOTOR
"Y" INDICATES EXPECTED HORSEPOWER
NO SUBSCRIPT INDICATES AC INDUCTION MOTOR
"X" INDICATES MOTOR TYPE, REFER TO ELECTRICAL LEGEND FOR DESCRIPTION

## SYMBOLS APPLICABLE TO ALL DRAWINGS

CONNECTION

NO CONNECTION

S — SOLENOID VALVE

LS — LIMIT SWITCH

SP — SURGE PROTECTOR

PM — POWER MONITOR

CONNECTION TO GROUNDING ELECTRODE

CS — CONTROL STATION

FVR — FULL VOLTAGE REVERSING MOTOR STARTER

SAFETY DISCONNECT SWITCH

RTU — REMOTE TERMINAL UNIT (PLC SYSTEM)

AFG — ABOVE FINISHED GRADE

AFF — ABOVE FINISHED FLOOR

REFERENCE SYMBOLS – WIRE AND CONDUIT SIZE AS SPECIFIED IN CONDUIT, WIRE AND CABLE SCHEDULE ON THE DRAWINGS.

## SYMBOLS APPLICABLE TO ONE–LINE DIAGRAMS

DISCONNECT SWITCH – MULTI–POLE GROUP OPERATED

LOAD BREAK SWITCH – GROUP OPERATED

FUSED CUTOUT

FUSED SWITCH

FUSIBLE SWITCH

VFD — VARIABLE FREQUENCY DRIVE

DISCONNECT

TRANSFORMER W/TERTIARY WINDING

CURRENT TRANSFORMER

CURRENT TRANSFORMER – BUSHING TYPE
"X" INDICATES NUMBER OF CT'S
"Y" INDICATES CT RATIO
"Z" INDICATES SETTING OF MULTI–RATIO CT IF REQUIRED

VOLTAGE TRANSFORMER
"X" INDICATES NUMBER OF VT'S
"Y" INDICATES VT RATIO

INTERLOCK
"X" INDICATES:
E – ELECTRICAL
M – MECHANICAL
K – KEY

SURGE/LIGHTNING ARRESTER

PROTECTIVE RELAY DEVICE
"X" INDICATES DEVICE TYPE, REFER TO ELECTRICAL LEGEND FOR DESCRIPTION

VACUUM CONTACTOR

## SYMBOLS APPLICABLE TO PLAN DRAWINGS

FLUORESCENT FIXTURE
"Y" INDICATES CIRCUIT NUMBER
"Z" INDICATES CONTROLLING SWITCH LOCATION,IF REQUIRED
FIXTURE TYPES W/EMERGENCY BALLAST SHALL BE HOT WIRED AT ALL TIMES

CEILING MOUNTED EXIT LIGHT FIXTURE
EXIT LIGHT ARROW DIRECTION IF REQUIRED

WALL MOUNTED EXIT LIGHT FIXTURE
EXIT LIGHT ARROW DIRECTION IF REQUIRED

CEILING MOUNTED INCANDESCENT/HID FIXTURE

WALL MOUNTED INCANDESCENT/HID FIXTURE

EMERGENCY LIGHT FIXTURE WITH BATTERY PACK CHARGER, ATTATCHED HEADS AND ACCESSORIES;
NOTE: NO. OF TRIANGLES INDICATES NO. OF ATTACHED HEADS.

REMOTE HEAD FOR EMERGENCY LIGHT SYSYTEM, REMOTE HEADS SHALL CONNECT TO INDICATED BATTERY PACK IN ACCORDANCE WITH WIRING SCHEDULE PROVIDED.

AREA OR ROADWAY LIGHT – POLE MOUNTED

NOTE: "X" ON LIGHTING FIXTURE INDICATES FIXTURE TYPE PER THE LIGHTING FIXTURE SCHEDULE.

SWITCH
NO SUBSCIPT INDICATES SINGLE POLE SWITCH GROUNDING TYPE
"X" INDICATES SWITCH TYPE:
2 – DOUBLE POLE SWITCH GROUNDING TYPE
3 – THREE – WAY SWITCH GROUNDING TYPE
4 – FOUR – WAY SWITCH GROUNDING TYPE
MC – MOMENTARY CONTACT SWITCH
K – KEY SWITCH
P – PILOT LIGHT (LIGHT TO BE ON WHEN SWITCH IS OFF U.O.N.)
TE – MANUAL MOTOR STARTER WITH OVERLOAD DEVICE
HP – TOGGLE SWITCH, HORSEPOWER RATED
D – DIMMER SWITCH

RECEPTACLE OUTLET
NO SUBSCRIPT INDICATES 20 AMP, 125 VOLT, DUPLEX RECEPTACLE GROUNDING TYPE
"X" INDICATES RECEPTACLE TYPE PER LEGEND DEFINITION
"Y" INDICATES CIRCUIT NUMBER FROM PANEL INDICATED

FLOOR OUTLET
"X" INDICATES:
F – FLUSH DEVICE
P – PEDESTAL DEVICE
"Y" INDICATES CIRCUIT NUMBER FROM PANEL INDICATED

SINGLE PURPOSE RECEPTACLE
C – CLOCK OUTLET

SPECIAL PURPOSE RECEPTACLE AS DEFINED ON THE DRAWINGS

$S_M$ — MANUAL MOTOR STARTER

TELEPHONE OUTLET

PHOTOCELL SWITCH

J — JUNCTION BOX

T — THERMOSTAT (OTHER THAN TEMPERATURE CONTROL)

--DB--- UNDERGROUND DUCT BANK (DETAIL, SHT. 1420)

## SYMBOLS APPLICABLE TO PLAN DRAWINGS

MOTOR CONTROLLER, SEE ONE–LINE DIAGRAM FOR DESCRIPTION

MANHOLE OR HANDHOLE

ELECTRICAL EQUIPMENT ENCLOSURE: SWITCHBOARD, MOTOR CONTROL CENTER, CONTROL PANEL, OR OTHER EQUIPMENT AS INDICATED

CONTROL PANEL FURNISHED WITH MECHANICAL, HVAC OR OTHER EQUIPMENT. IF MOTOR STARTERS ARE REQUIRED, AND ARE NOT SHOWN ON THE ELECTRICAL ONE–LINE DIAGRAM, THEY SHALL BE FURNISHED AS PART OF THE CONTROL PANEL.

PANELBOARD

CONDUIT TURNS UP

CONDUIT TURNS DOWN

BRANCH CIRCUIT OR FEEDER. 2–#12, 1–#12 G U.O.N. IF SPECIFIC ROUTING OF WIRES IS REQUIRED, MINIMUM CONDUIT SIZE IS 3/4" U.O.N.

2 (TYP)
HOME RUN TO PANEL: NUMBER OF ARROWS INDICATES NUMBER OF CIRCUITS. CKT. NO. INDICATED.

I — INSTRUMENTATION CIRCUIT CONSISTING OF 1–#18 TSP IN 3/4" CONDUIT U.O.N.

T — TELEPHONE CIRCUIT

CONDUIT BELOW GRADE OR EMBEDDED IN CONCRETE STRUCTURE

EXPOSED CONDUIT OR WIRING, UNLESS OTHERWISE INDICATED

BARE COPPER GROUND WIRE SIZE AS INDICATED ON DRAWINGS

30 — GROUND CONDUCTOR 30 INDICATES 30" TAIL PROVIDED

GROUND ROD – 3/4"x10' UNLESS INDICATED AS SECTIONAL

T — DRY TYPE TRANSFORMER

COMBINATION TYPE MAGNETIC MOTOR STARTER

AWG #2/0 COPPER GROUND 30" BELOW GRADE

HOR — HAND/OFF/REMOTE CONTROL STATION WITH PILOT LIGHT

HOA — HAND/OFF/AUTO CONTROL STATION WITH PILOT LIGHT

OR — OFF/REMOTE CONTROL STATION WITH PILOT LIGHT

PS — PRESSURE SWITCH

FT — FLOW TRANSMITTER

FM — FLOWMETER

SA — PUMP STROKE ADJUSTER

VS — OPERATORS PANEL FOR VARIABLE SPEED DRIVE

LS — LEVEL SWITCH. FLOAT TYPE

M — MOTOR OPERATED VALVE

D — DAMPER OPERATOR

DHJB — DATA HIGHWAY PULL BOX (DETAIL, SHT. 1420)

EMH — ELECTRICAL MANHOLE (DETAIL, SHT. 1421)

## SYMBOLS APPLICABLE TO CONTROL SCHEMATICS

NORMALLY CLOSED MANUAL SWITCH

NORMALLY OPEN MANUAL SWITCH

NORMALLY CLOSED CONTACTS (N.C.)

NORMALLY OPEN CONTACTS (N.O.)

INDICATING LIGHT
"X" INDICATES COLOR

SOLENOID

THERMAL OVERLOAD ELEMENT

CONTROL COIL
"X" INDICATES TYPE
CR – CONTROL RELAY
M – MOTOR STARTER
TDR– TIMING RELAY
TC – TIME CLOCK

SPEED SWITCH, N.O.

SPEED SWITCH, N.C.

LIMIT SWITCH, N.O.

LIMIT SWITCH, N.C.

PRESSURE SWITCH, N.O.

PRESSURE SWITCH, N.C.

TORQUE SWITCH

TIME DELAY, CLOSE AFTER ENERGIZATION

TIME DELAY, OPEN AFTER ENERGIZATION

TIME DELAY, CLOSE AFTER DE–ENERGIZATION

TIME DELAY, OPEN AFTER DE–ENERGIZATION

TEMPERATURE SWITCH, N.O.

TEMPERATURE SWITCH, N.C.

LEVEL SWITCH, N.O.

LEVEL SWITCH, N.C.

FLOW SWITCH, N.O.

FLOW SWITCH, N.C.

SELECTOR SWITCH, AS INDICATED ON DRAWINGS
× INDICATES CLOSED POSITION

MOTOR

## GENERAL NOTES:

C AD–3

A. SEE DRAWING 3A FOR GENERAL ABBREVIATIONS, EQUIPMENT PREFIXES AND FLOW STREAM IDENTIFICATION.

B. THIS IS A GENERAL LEGEND DRAWING. NOT ALL SYMBOLS WILL BE USED IN CONTRACT.

C. WHERE CONFLICTS OCCUR BETWEEN THE GENERAL LEGEND DRAWING AND THE SPECIFIC DRAWINGS HEREIN, THE SPECIFIC DRAWINGS SHALL TAKE PRECEDENCE.

## SYMBOLS APPLICABLE TO CONTROL SCHEMATICS

| | |
|---|---|
| TD | TIME DELAY RELAY |
| CR | CONTROL RELAY |
| M | STARTER COIL |
| OC | OPEN CONTACTOR |
| CC | CLOSE CONTACTOR |
| TMR | TIMER |
| ALT | ALTERNATOR |
| CPT | CONTROL POWER TRANSFORMER |
| PC | PHOTOCELL CONTROLLER |
| AFG | ABOVE FINISHED GRADE |
| AFF | ABOVE FINISHED FLOOR |
| EMH | ELECTRICAL MANHOLE, SEE DETAIL |
| PLC | PROGRAMMABLE LOGIC CONTROLLER |
| GFI | GROUND FAULT INTERRUPTER |
| I/I | CURRENT ISOLATOR. 4–20MADC INPUT 4–20MADC OUTPUT. |
| PM | LOSS OF PHASE AND UNDERVOLTAGE RELAY |
| AM | AMMETER |
| SS | SELECTOR SWITCH |
| PL | PILOT LIGHT |

HDR

HDR Engineering, Inc. of North Carolina

| Issue No. | Description | Date | Drwn. | Chkd. | Resp. Engr. | Proj. Mgr. |
|---|---|---|---|---|---|---|
| R | RECORD DRAWING | 6/97 | | | | |
| 0 | ISSUE FOR CONSTRUCTION | 5/19/94 | | | | |
| C | CONFORM TO ADDENDA NO 3 | 2/17/94 | | | | |
| B | ISSUED FOR BIDS | 1/10/94 | | | | |
| A | ISSUED FOR APPROVAL | 6/15/93 | | | | |

NORTH CAROLINA PROFESSIONAL SEAL 8205 ENGINEER RAYMOND H. HAMILTON

| | |
|---|---|
| Project Manager | R. HAMILTON |
| Architect | G. GENRICH |
| Civil | K. MOSTELLER |
| Electrical | R. MILLS |
| I&C/Process | R. HAMILTON |
| Mechanical | D. DeBOER |
| Structural | N. CABLE |
| Drawn By | D. PETERSON |

City of Hickory
Henry Fork WWTP
Expansion and Upgrade
Contract C - Electrical

Hickory North Carolina

# Electrical Symbols

| Date | Project No. | Sheet No. | Issue |
|---|---|---|---|
| NOV 1993 | 00231–012–018 | 1436 | R |

Scale: NO SCALE

P:\HICKORY2\HF–1435